APPENDIX B

TRAFFIC DATA

APPENDIX B

TRANSPORTATION AND CIRCULATION

FEHR & PEERS
TRANSPORTATION CONSULTANTS

Appendix B-1
Count Data

FEHR & PEERS
TRANSPORTATION CONSULTANTS

MARKS TRAFFIC DATA

CITY OF ALBANY

fp
Mietek 916-806-0250

File Name : pablo-solano-a
Site Code : 1
Start Date : 5/6/2008
Page No : 1

Groups Printed- Vehicles Only

	SAN PABLO AVE Southbound				SOLANO AVE Westbound				SAN PABLO AVE Northbound				SOLANO AVE Eastbound				
Start Time	RT	TH	LT	App. Total	RT	TH	LT	App. Total	RT	TH	LT	App. Total	RT	TH	LT	App. Total	Int. Total
07:00	18	101	10	129	11	16	28	55	14	32	1	47	7	34	6	47	278
07:15	10	146	12	168	11	28	22	61	20	53	0	73	11	51	12	74	376
07:30	24	178	25	227	10	47	41	98	33	57	0	90	18	47	35	100	515
07:45	27	232	28	287	27	49	41	117	30	83	3	116	16	56	16	88	608
Total	79	657	75	811	59	140	132	331	97	225	4	326	52	188	69	309	1777
08:00	25	231	32	288	23	40	61	124	17	85	2	104	19	52	16	87	603
08:15	11	273	28	312	18	49	31	98	18	98	2	118	27	67	24	118	646
08:30	44	290	25	359	36	78	46	160	33	89	2	124	13	39	34	86	729
08:45	40	310	43	393	24	41	40	105	24	112	6	142	15	38	21	74	714
Total	120	1104	128	1352	101	208	178	487	92	384	12	488	74	196	95	365	2692
Grand Total	199	1761	203	2163	160	348	310	818	189	609	16	814	126	384	164	674	4469
Apprch %	9.2	81.4	9.4		19.6	42.5	37.9		23.2	74.8	2		18.7	57	24.3		
Total %	4.5	39.4	4.5	48.4	3.6	7.8	6.9	18.3	4.2	13.6	0.4	18.2	2.8	8.6	3.7	15.1	

	SAN PABLO AVE Southbound				SOLANO AVE Westbound				SAN PABLO AVE Northbound				SOLANO AVE Eastbound				
Start Time	RT	TH	LT	App. Total	RT	TH	LT	App. Total	RT	TH	LT	App. Total	RT	TH	LT	App. Total	Int. Total
Peak Hour Analysis From 07:00 to 08:45 - Peak 1 of 1																	
Peak Hour for Entire Intersection Begins at 08:00																	
08:00	25	231	32	288	23	40	61	124	17	85	2	104	19	52	16	87	603
08:15	11	273	28	312	18	49	31	98	18	98	2	118	27	67	24	118	646
08:30	44	290	25	359	36	78	46	160	33	89	2	124	13	39	34	86	729
08:45	40	310	43	393	24	41	40	105	24	112	6	142	15	38	21	74	714
Total Volume	120	1104	128	1352	101	208	178	487	92	384	12	488	74	196	95	365	2692
% App. Total	8.9	81.7	9.5		20.7	42.7	36.6		18.9	78.7	2.5		20.3	53.7	26		
PHF	.682	.890	.744	.860	.701	.667	.730	.761	.697	.857	.500	.859	.685	.731	.699	.773	.923

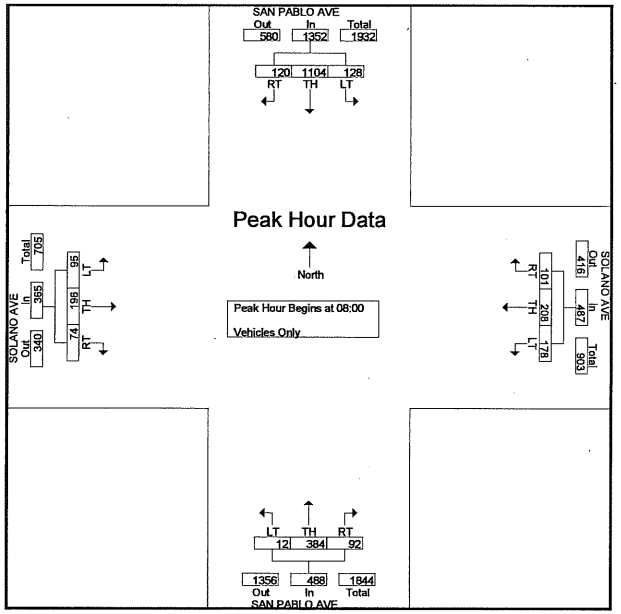

MARKS TRAFFIC DATA

CITY OF ALBANY

fp
Mietek 916-806-0250

File Name : 80wb-buchanan-a
Site Code : 2
Start Date : 5/8/2008
Page No : 1

Groups Printed- Vehicles Only

	I-80 WB OFF-RAMP Southbound				BUCHANAN ST Westbound				I-80 WB ON-RAMP Northbound				BUCHANAN ST Eastbound				
Start Time	RT	TH	LT	App. Total	RT	TH	LT	App. Total	RT	TH	LT	App. Total	RT	TH	LT	App. Total	Int. Total
07:00	0	10	46	56	0	6	135	141	0	0	0	0	0	2	0	2	199
07:15	2	17	67	86	0	2	121	123	0	0	0	0	0	1	0	1	210
07:30	0	33	80	113	0	4	139	143	0	0	0	0	0	1	0	1	257
07:45	0	56	104	160	0	6	157	163	0	0	0	0	0	0	0	0	323
Total	2	116	297	415	0	18	552	570	0	0	0	0	0	4	0	4	989
08:00	0	26	73	99	0	7	189	196	0	0	0	0	0	3	0	3	298
08:15	1	39	74	114	0	3	159	162	0	0	0	0	1	5	0	6	282
08:30	0	27	80	107	0	7	152	159	0	0	0	0	0	3	0	3	269
08:45	0	18	77	95	0	2	147	149	0	0	0	0	2	4	0	6	250
Total	1	110	304	415	0	19	647	666	0	0	0	0	3	15	0	18	1099
Grand Total	3	226	601	830	0	37	1199	1236	0	0	0	0	3	19	0	22	2088
Apprch %	0.4	27.2	72.4		0	3	97		0	0	0		13.6	86.4	0		
Total %	0.1	10.8	28.8	39.8	0	1.8	57.4	59.2	0	0	0	0	0.1	0.9	0	1.1	

	I-80 WB OFF-RAMP Southbound				BUCHANAN ST Westbound				I-80 WB ON-RAMP Northbound				BUCHANAN ST Eastbound				
Start Time	RT	TH	LT	App. Total	RT	TH	LT	App. Total	RT	TH	LT	App. Total	RT	TH	LT	App. Total	Int. Total
Peak Hour Analysis From 07:00 to 08:45 - Peak 1 of 1																	
Peak Hour for Entire Intersection Begins at 07:45																	
07:45	0	56	104	160	0	6	157	163	0	0	0	0	0	0	0	0	323
08:00	0	26	73	99	0	7	189	196	0	0	0	0	0	3	0	3	298
08:15	1	39	74	114	0	3	159	162	0	0	0	0	1	5	0	6	282
08:30	0	27	80	107	0	7	152	159	0	0	0	0	0	3	0	3	269
Total Volume	1	148	331	480	0	23	657	680	0	0	0	0	1	11	0	12	1172
% App. Total	0.2	30.8	69		0	3.4	96.6		0	0	0		8.3	91.7	0		
PHF	.250	.661	.796	.750	.000	.821	.869	.867	.000	.000	.000	.000	.250	.550	.000	.500	.907

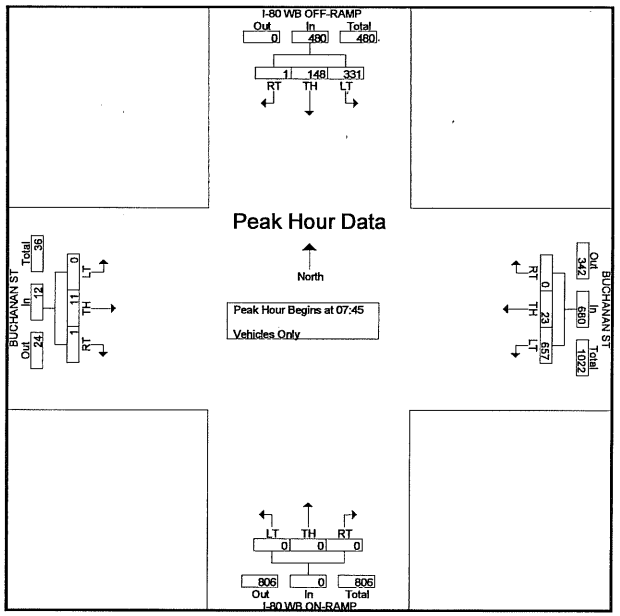

MARKS TRAFFIC DATA

CITY OF ALBANY

fp
Mietek 916-806-0250

File Name : 80eb-buchanan-a
Site Code : 3
Start Date : 5/8/2008
Page No : 1

Groups Printed- Vehicles Only

	I-80 EB ON-RAMP Southbound				BUCHANAN ST Westbound				I-80 EB OFF-RAMP Northbound				BUCHANAN ST Eastbound				
Start Time	RT	TH	LT	App. Total	RT	TH	LT	App. Total	RT	TH	LT	App. Total	RT	TH	LT	App. Total	Int. Total
07:00	0	0	0	0	60	142	0	202	55	2	2	59	0	42	3	45	306
07:15	0	0	0	0	91	126	0	217	82	2	0	84	0	66	1	67	368
07:30	0	0	0	0	106	140	0	246	94	1	1	96	0	80	2	82	424
07:45	0	0	0	0	143	160	0	303	108	0	5	113	0	107	0	107	523
Total	0	0	0	0	400	568	0	968	339	5	8	352	0	295	6	301	1621
08:00	0	0	0	0	151	194	0	345	82	4	0	86	0	73	2	75	506
08:15	0	0	0	0	142	158	0	300	77	1	2	80	0	76	1	77	457
08:30	0	0	0	0	117	155	0	272	84	0	2	86	0	82	2	84	442
08:45	0	0	0	0	146	146	0	292	122	2	2	126	0	76	3	79	497
Total	0	0	0	0	556	653	0	1209	365	7	6	378	0	307	8	315	1902
Grand Total	0	0	0	0	956	1221	0	2177	704	12	14	730	0	602	14	616	3523
Apprch %	0	0	0		43.9	56.1	0		96.4	1.6	1.9		0	97.7	2.3		
Total %	0	0	0	0	27.1	34.7	0	61.8	20	0.3	0.4	20.7	0	17.1	0.4	17.5	

	I-80 EB ON-RAMP Southbound				BUCHANAN ST Westbound				I-80 EB OFF-RAMP Northbound				BUCHANAN ST Eastbound				
Start Time	RT	TH	LT	App. Total	RT	TH	LT	App. Total	RT	TH	LT	App. Total	RT	TH	LT	App. Total	Int. Total
Peak Hour Analysis From 07:00 to 08:45 - Peak 1 of 1																	
Peak Hour for Entire Intersection Begins at 07:45																	
07:45	0	0	0	0	143	160	0	303	108	0	5	113	0	107	0	107	523
08:00	0	0	0	0	151	194	0	345	82	4	0	86	0	73	2	75	506
08:15	0	0	0	0	142	158	0	300	77	1	2	80	0	76	1	77	457
08:30	0	0	0	0	117	155	0	272	84	0	2	86	0	82	2	84	442
Total Volume	0	0	0	0	553	667	0	1220	351	5	9	365	0	338	5	343	1928
% App. Total	0	0	0		45.3	54.7	0		96.2	1.4	2.5		0	98.5	1.5		
PHF	.000	.000	.000	.000	.916	.860	.000	.884	.813	.313	.450	.808	.000	.790	.625	.801	.922

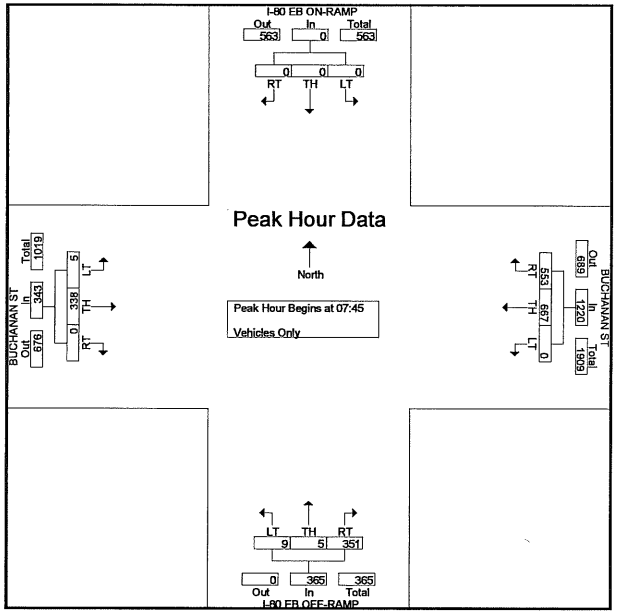

MARKS TRAFFIC DATA

CITY OF ALBANY

fp
Mietek 916-806-0250

File Name : eastshore-buchanan-a
Site Code : 4
Start Date : 5/6/2008
Page No : 1

Groups Printed- Vehicles Only

	0 Southbound				BUCHANAN ST Westbound				EASTSHORE HWY Northbound				BUCHANAN ST Eastbound				
Start Time	RT	TH	LT	App. Total	RT	TH	LT	App. Total	RT	TH	LT	App. Total	RT	TH	LT	App. Total	Int. Total
07:00	0	0	0	0	0	208	19	227	3	0	0	3	7	115	0	122	352
07:15	0	0	0	0	0	227	16	243	1	0	0	1	8	136	0	144	388
07:30	0	0	0	0	0	264	32	296	4	0	0	4	17	180	0	197	497
07:45	0	0	0	0	0	300	59	359	10	0	0	10	17	180	0	197	566
Total	0	0	0	0	0	999	126	1125	18	0	0	18	49	611	0	660	1803
08:00	0	0	0	0	0	306	79	385	8	0	0	8	30	151	0	181	574
08:15	0	0	0	0	0	332	79	411	15	0	0	15	24	133	0	157	583
08:30	0	0	0	0	0	343	70	413	15	0	0	15	15	180	0	195	623
08:45	0	0	0	0	0	292	90	382	11	0	0	11	16	163	0	179	572
Total	0	0	0	0	0	1273	318	1591	49	0	0	49	85	627	0	712	2352
Grand Total	0	0	0	0	0	2272	444	2716	67	0	0	67	134	1238	0	1372	4155
Apprch %	0	0	0		0	83.7	16.3	-	100	0	0		9.8	90.2	0		
Total %	0	0	0	0	0	54.7	10.7	65.4	1.6	0	0	1.6	3.2	29.8	0	33	

	0 Southbound				BUCHANAN ST Westbound				EASTSHORE HWY Northbound				BUCHANAN ST Eastbound				
Start Time	RT	TH	LT	App. Total	RT	TH	LT	App. Total	RT	TH	LT	App. Total	RT	TH	LT	App. Total	Int. Total
Peak Hour Analysis From 07:00 to 08:45 - Peak 1 of 1																	
Peak Hour for Entire Intersection Begins at 08:00																	
08:00	0	0	0	0	0	306	79	385	8	0	0	8	30	151	0	181	574
08:15	0	0	0	0	0	332	79	411	15	0	0	15	24	133	0	157	583
08:30	0	0	0	0	0	343	70	413	15	0	0	15	15	180	0	195	623
08:45	0	0	0	0	0	292	90	382	11	0	0	11	16	163	0	179	572
Total Volume	0	0	0	0	0	1273	318	1591	49	0	0	49	85	627	0	712	2352
% App. Total	0	0	0		0	80	20		100	0	0		11.9	88.1	0		
PHF	.000	.000	.000	.000	.000	.928	.883	.963	.817	.000	.000	.817	.708	.871	.000	.913	.944

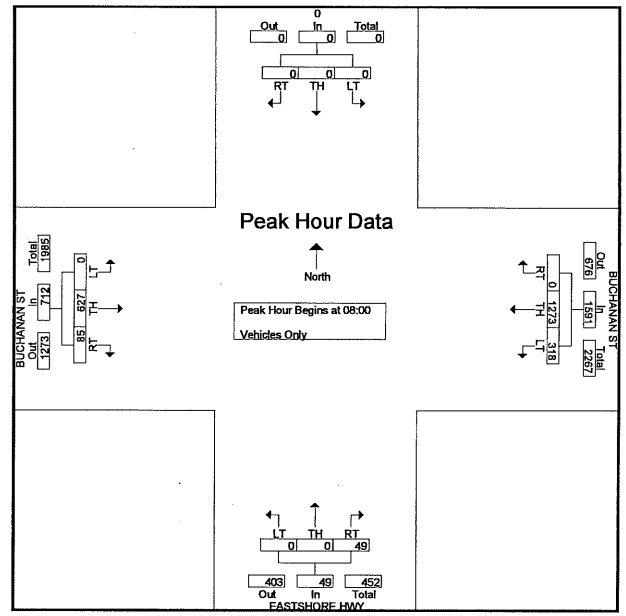

Intersection Turning Movement

Prepared by:

National Data & Surveying Services

N-S STREET: Jackson St DATE: 1/16/2008 LOCATION: City of Albany

E-W STREET: Buchanan St DAY: WEDNESDAY PROJECT# 07-7587-002

	NORTHBOUND			SOUTHBOUND			EASTBOUND			WESTBOUND			
	NL	NT	NR	SL	ST	SR	EL	ET	ER	WL	WT	WR	TOTAL
LANES:	0	1	0	0	1	0	1	2	0	1	2	0	
6:00 AM													
6:15 AM													
6:30 AM													
6:45 AM													
7:00 AM	2	4	6	2	1	30	0	117	13	3	133	3	314
7:15 AM	4	3	4	2	7	39	3	181	26	0	133	3	405
7:30 AM	9	12	8	3	21	31	6	203	14	3	173	2	485
7:45 AM	12	16	2	8	25	36	4	220	27	6	221	3	580
8:00 AM	28	9	8	7	24	24	25	217	25	11	222	5	605
8:15 AM	24	21	21	5	53	25	2	247	30	18	232	5	683
8:30 AM	17	22	20	5	29	39	6	237	20	11	211	4	621
8:45 AM	18	15	10	6	15	31	7	223	20	3	214	3	565
9:00 AM													
9:15 AM													
9:30 AM													
9:45 AM													
10:00 AM													
10:15 AM													
10:30 AM													
10:45 AM													
11:00 AM													
11:15 AM													
11:30 AM													
11:45 AM													
TOTAL VOLUMES =	NL 114	NT 102	NR 79	SL 38	ST 175	SR 255	EL 53	ET 1645	ER 175	WL 55	WT 1539	WR 28	TOTAL 4258

AM Peak Hr Begins at: 745 AM

PEAK VOLUMES =	81	68	51	25	131	124	37	921	102	46	886	17	2489
PEAK HR. FACTOR:		0.758			0.843			0.950			0.930		0.911

CONTROL: Signalized

MARKS TRAFFIC DATA

CITY OF ALBANY

fp
Mietek 916-806-0250

File Name : pablo-buchanan-a
Site Code : 5
Start Date : 5/8/2008
Page No : 1

Groups Printed- Vehicles Only

	SAN PABLO AVE Southbound				KELLY MOORE D/W Westbound				SAN PABLO AVE Northbound				BUCHANAN ST Eastbound				
Start Time	RT	TH	LT	App. Total	RT	TH	LT	App. Total	RT	TH	LT	App. Total	RT	TH	LT	App. Total	Int. Total
07:00	24	127	3	154	0	0	0	0	0	36	1	37	0	0	14	14	205
07:15	25	139	0	164	0	0	0	0	0	56	6	62	1	0	23	24	250
07:30	40	202	0	242	0	0	0	0	0	64	4	68	2	0	21	23	333
07:45	48	211	0	259	0	0	0	0	2	89	11	102	0	0	37	37	398
Total	137	679	3	819	0	0	0	0	2	245	22	269	3	0	95	98	1186
08:00	59	214	0	273	0	0	0	0	5	89	8	102	2	0	28	30	405
08:15	38	227	1	266	0	0	0	0	1	87	3	91	0	0	29	29	386
08:30	46	223	1	270	0	0	0	0	1	105	8	114	2	0	31	33	417
08:45	43	201	0	244	0	0	0	0	3	112	3	118	3	0	37	40	402
Total	186	865	2	1053	0	0	0	0	10	393	22	425	7	0	125	132	1610
Grand Total	323	1544	5	1872	0	0	0	0	12	638	44	694	10	0	220	230	2796
Apprch %	17.3	82.5	0.3		0	0	0		1.7	91.9	6.3		4.3	0	95.7		
Total %	11.6	55.2	0.2	67	0	0	0	0	0.4	22.8	1.6	24.8	0.4	0	7.9	8.2	

	SAN PABLO AVE Southbound				KELLY MOORE D/W Westbound				SAN PABLO AVE Northbound				BUCHANAN ST Eastbound				
Start Time	RT	TH	LT	App. Total	RT	TH	LT	App. Total	RT	TH	LT	App. Total	RT	TH	LT	App. Total	Int. Total
Peak Hour Analysis From 07:00 to 08:45 - Peak 1 of 1																	
Peak Hour for Entire Intersection Begins at 08:00																	
08:00	59	214	0	273	0	0	0	0	5	89	8	102	2	0	28	30	405
08:15	38	227	1	266	0	0	0	0	1	87	3	91	0	0	29	29	386
08:30	46	223	1	270	0	0	0	0	1	105	8	114	2	0	31	33	417
08:45	43	201	0	244	0	0	0	0	3	112	3	118	3	0	37	40	402
Total Volume	186	865	2	1053	0	0	0	0	10	393	22	425	7	0	125	132	1610
% App. Total	17.7	82.1	0.2		0	0	0		2.4	92.5	5.2		5.3	0	94.7		
PHF	.788	.953	.500	.964	.000	.000	.000	.000	.500	.877	.688	.900	.583	.000	.845	.825	.965

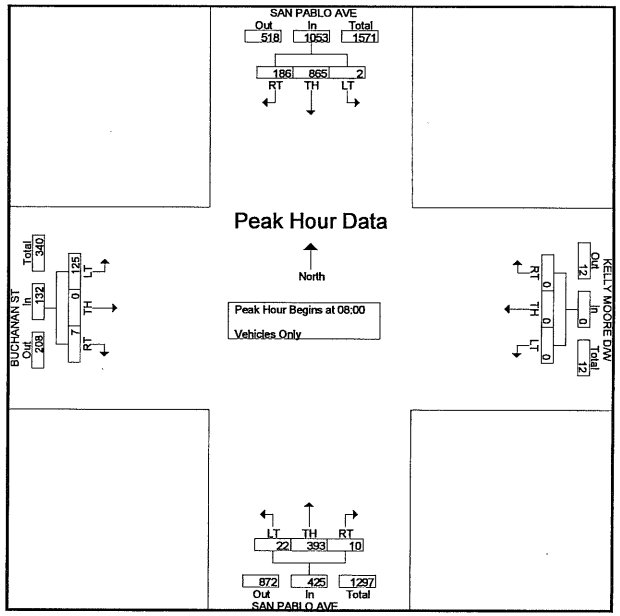

Intersection Turning Movement

Prepared by:

National Data & Surveying Services

N-S STREET: San Pablo Ave DATE: 1/16/2008 LOCATION: City of Albany

E-W STREET: Marin Ave DAY: WEDNESDAY PROJECT# 07-7587-001

	NORTHBOUND			SOUTHBOUND			EASTBOUND			WESTBOUND			
	NL	NT	NR	SL	ST	SR	EL	ET	ER	WL	WT	WR	TOTAL
LANES:	1	2	0	1	2	0	1	2	0	1	1.5	.5	
6:00 AM													
6:15 AM													
6:30 AM													
6:45 AM													
7:00 AM	7	23	1	5	110	3	1	68	23	4	94	5	344
7:15 AM	10	41	2	8	164	1	2	107	40	19	103	8	505
7:30 AM	27	56	8	22	156	0	6	134	41	17	122	17	606
7:45 AM	23	89	11	22	216	5	2	135	65	20	141	13	742
8:00 AM	34	69	7	37	215	5	6	163	58	33	186	16	829
8:15 AM	29	85	11	31	236	4	7	171	60	41	205	19	899
8:30 AM	30	95	5	20	194	2	4	169	50	23	162	21	775
8:45 AM	23	85	15	27	186	3	4	168	52	31	178	13	785
9:00 AM													
9:15 AM													
9:30 AM													
9:45 AM													
10:00 AM													
10:15 AM													
10:30 AM													
10:45 AM													
11:00 AM													
11:15 AM													
11:30 AM													
11:45 AM													
TOTAL VOLUMES =	183	543	60	172	1477	23	32	1115	389	188	1191	112	5485

AM Peak Hr Begins at: 800 AM

PEAK VOLUMES =	116	334	38	115	831	14	21	671	220	128	731	69	3288
PEAK HR. FACTOR:		0.938			0.886			0.958			0.875		0.914

CONTROL: Signalized

MARKS TRAFFIC DATA

CITY OF ALBANY

fp
Mietek 916-806-0250

File Name : masonic-marin-a
Site Code : 6
Start Date : 5/8/2008
Page No : 1

Groups Printed- Vehicles Only

	MASONIC AVE Southbound				MARIN AVE Westbound				MASONIC AVE Northbound				MARIN AVE Eastbound				
Start Time	RT	TH	LT	App. Total	RT	TH	LT	App. Total	RT	TH	LT	App. Total	RT	TH	LT	App. Total	Int. Total
07:00	8	7	2	17	3	90	0	93	3	6	2	11	2	69	3	74	195
07:15	9	14	8	31	4	108	0	112	4	13	8	25	8	97	7	112	280
07:30	17	34	7	58	10	110	0	120	6	22	6	34	8	179	8	195	407
07:45	16	35	20	71	12	147	0	159	3	19	8	30	8	201	5	214	474
Total	50	90	37	177	29	455	0	484	16	60	24	100	26	546	23	595	1356
08:00	17	36	24	77	6	182	4	192	0	9	7	16	6	140	6	152	437
08:15	13	27	20	60	9	173	1	183	1	16	20	37	5	130	2	137	417
08:30	11	48	11	70	10	164	2	176	2	17	14	33	7	191	6	204	483
08:45	11	23	14	48	16	153	0	169	3	26	10	39	7	183	4	194	450
Total	52	134	69	255	41	672	7	720	6	68	51	125	25	644	18	687	1787
Grand Total	102	224	106	432	70	1127	7	1204	22	128	75	225	51	1190	41	1282	3143
Apprch %	23.6	51.9	24.5		5.8	93.6	0.6		9.8	56.9	33.3		4	92.8	3.2		
Total %	3.2	7.1	3.4	13.7	2.2	35.9	0.2	38.3	0.7	4.1	2.4	7.2	1.6	37.9	1.3	40.8	

	MASONIC AVE Southbound				MARIN AVE Westbound				MASONIC AVE Northbound				MARIN AVE Eastbound				
Start Time	RT	TH	LT	App. Total	RT	TH	LT	App. Total	RT	TH	LT	App. Total	RT	TH	LT	App. Total	Int. Total
Peak Hour Analysis From 07:00 to 08:45 - Peak 1 of 1																	
Peak Hour for Entire Intersection Begins at 07:45																	
07:45	16	35	20	71	12	147	0	159	3	19	8	30	8	201	5	214	474
08:00	17	36	24	77	6	182	4	192	0	9	7	16	6	140	6	152	437
08:15	13	27	20	60	9	173	1	183	1	16	20	37	5	130	2	137	417
08:30	11	48	11	70	10	164	2	176	2	17	14	33	7	191	6	204	483
Total Volume	57	146	75	278	37	666	7	710	6	61	49	116	26	662	19	707	1811
% App. Total	20.5	52.5	27		5.2	93.8	1		5.2	52.6	42.2		3.7	93.6	2.7		
PHF	.838	.760	.781	.903	.771	.915	.438	.924	.500	.803	.613	.784	.813	.823	.792	.826	.937

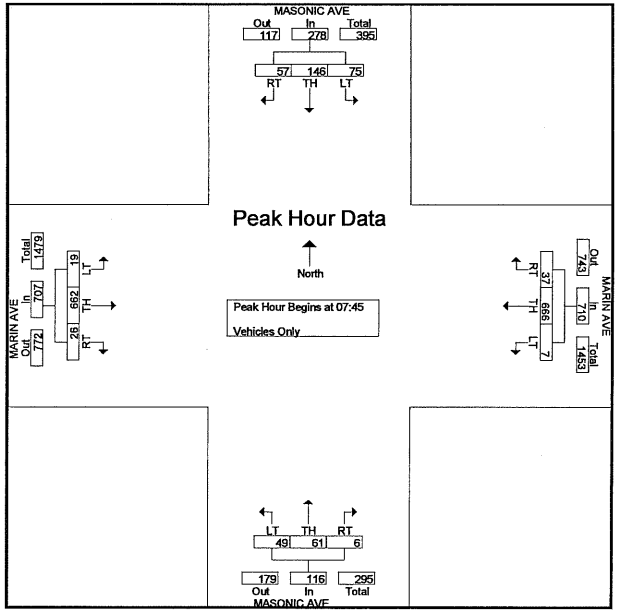

MARKS TRAFFIC DATA

CITY OF ALBANY

fp
Mietek 916-806-0250

File Name : jackson-monroe-a
Site Code : 7
Start Date : 5/6/2008
Page No : 1

Groups Printed- Vehicles Only

	JACKSON ST Southbound				MONROE ST Westbound				JACKSON ST Northbound				D/W Eastbound				
Start Time	RT	TH	LT	App. Total	RT	TH	LT	App. Total	RT	TH	LT	App. Total	RT	TH	LT	App. Total	Int. Total
07:00	0	11	5	16	1	0	2	3	4	2	0	6	0	0	0	0	25
07:15	0	20	3	23	4	0	4	8	1	7	0	8	0	0	0	0	39
07:30	1	22	5	28	9	0	4	13	5	9	0	14	0	0	0	0	55
07:45	0	24	12	36	6	1	7	14	2	8	1	11	0	1	1	2	63
Total	1	77	25	103	20	1	17	38	12	26	1	39	0	1	1	2	182
08:00	0	28	8	36	8	2	10	20	12	8	0	20	0	0	0	0	76
08:15	0	30	30	60	13	2	10	25	9	13	0	22	0	0	2	2	109
08:30	2	37	14	53	9	0	15	24	3	8	0	11	0	0	0	0	88
08:45	0	35	11	46	7	1	12	20	4	9	0	13	0	0	0	0	79
Total	2	130	63	195	37	5	47	89	28	38	0	66	0	0	2	2	352
Grand Total	3	207	88	298	57	6	64	127	40	64	1	105	0	1	3	4	534
Apprch %	1	69.5	29.5		44.9	4.7	50.4		38.1	61	1		0	25	75		
Total %	0.6	38.8	16.5	55.8	10.7	1.1	12	23.8	7.5	12	0.2	19.7	0	0.2	0.6	0.7	

	JACKSON ST Southbound				MONROE ST Westbound				JACKSON ST Northbound				D/W Eastbound				
Start Time	RT	TH	LT	App. Total	RT	TH	LT	App. Total	RT	TH	LT	App. Total	RT	TH	LT	App. Total	Int. Total
Peak Hour Analysis From 07:00 to 08:45 - Peak 1 of 1																	
Peak Hour for Entire Intersection Begins at 08:00																	
08:00	0	28	8	36	8	2	10	20	12	8	0	20	0	0	0	0	76
08:15	0	30	30	60	13	2	10	25	9	13	0	22	0	0	2	2	109
08:30	2	37	14	53	9	0	15	24	3	8	0	11	0	0	0	0	88
08:45	0	35	11	46	7	1	12	20	4	9	0	13	0	0	0	0	79
Total Volume	2	130	63	195	37	5	47	89	28	38	0	66	0	0	2	2	352
% App. Total	1	66.7	32.3		41.6	5.6	52.8		42.4	57.6	0		0	0	100		
PHF	.250	.878	.525	.813	.712	.625	.783	.890	.583	.731	.000	.750	.000	.000	.250	.250	.807

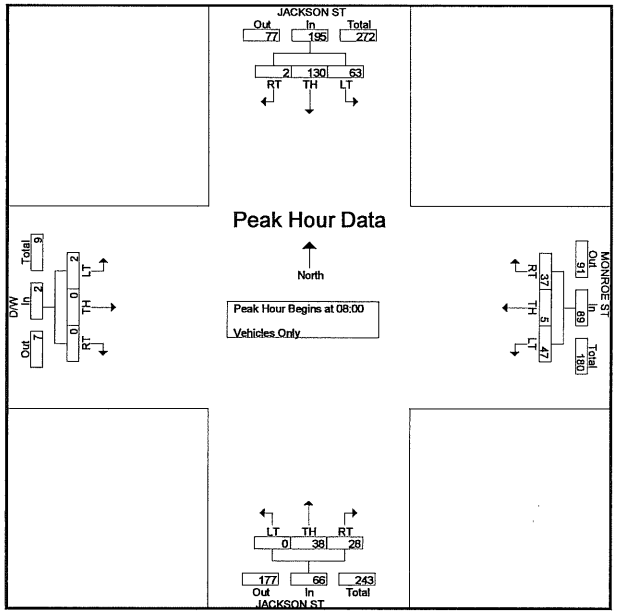

MARKS TRAFFIC DATA

CITY OF ALBANY

fp
Mietek 916-806-0250

File Name : pablo-monroe-a
Site Code : 8
Start Date : 5/6/2008
Page No : 1

Groups Printed- Vehicles Only

	SAN PABLO AV Southbound				D/W Westbound				SAN PABLO AV Northbound				MONROE ST Eastbound				
Start Time	RT	TH	LT	App. Total	RT	TH	LT	App. Total	RT	TH	LT	App. Total	RT	TH	LT	App. Total	Int. Total
07:00	3	144	0	147	0	0	0	0	1	49	0	50	7	0	0	7	204
07:15	4	168	0	172	1	0	0	1	0	65	2	67	1	0	1	2	242
07:30	6	233	0	239	1	0	0	1	1	86	3	90	5	0	4	9	339
07:45	6	299	0	305	0	0	0	0	5	97	5	107	13	0	3	16	428
Total	19	844	0	863	2	0	0	2	7	297	10	314	26	0	8	34	1213
08:00	8	320	1	329	1	0	0	1	0	90	11	101	7	0	6	13	444
08:15	10	308	0	318	1	0	0	1	0	103	13	116	25	0	9	34	469
08:30	13	352	0	365	1	0	0	1	1	104	4	109	17	0	5	22	497
08:45	10	349	1	360	3	0	0	3	1	114	7	122	13	0	6	19	504
Total	41	1329	2	1372	6	0	0	6	2	411	35	448	62	0	26	88	1914
Grand Total	60	2173	2	2235	8	0	0	8	9	708	45	762	88	0	34	122	3127
Apprch %	2.7	97.2	0.1		100	0	0		1.2	92.9	5.9		72.1	0	27.9		
Total %	1.9	69.5	0.1	71.5	0.3	0	0	0.3	0.3	22.6	1.4	24.4	2.8	0	1.1	3.9	

	SAN PABLO AV Southbound				D/W Westbound				SAN PABLO AV Northbound				MONROE ST Eastbound				
Start Time	RT	TH	LT	App. Total	RT	TH	LT	App. Total	RT	TH	LT	App. Total	RT	TH	LT	App. Total	Int. Total
Peak Hour Analysis From 07:00 to 08:45 - Peak 1 of 1																	
Peak Hour for Entire Intersection Begins at 08:00																	
08:00	8	320	1	329	1	0	0	1	0	90	11	101	7	0	6	13	444
08:15	10	308	0	318	1	0	0	1	0	103	13	116	25	0	9	34	469
08:30	13	352	0	365	1	0	0	1	1	104	4	109	17	0	5	22	497
08:45	10	349	1	360	3	0	0	3	1	114	7	122	13	0	6	19	504
Total Volume	41	1329	2	1372	6	0	0	6	2	411	35	448	62	0	26	88	1914
% App. Total	3	96.9	0.1		100	0	0		0.4	91.7	7.8		70.5	0	29.5		
PHF	.788	.944	.500	.940	.500	.000	.000	.500	.500	.901	.673	.918	.620	.000	.722	.647	.949

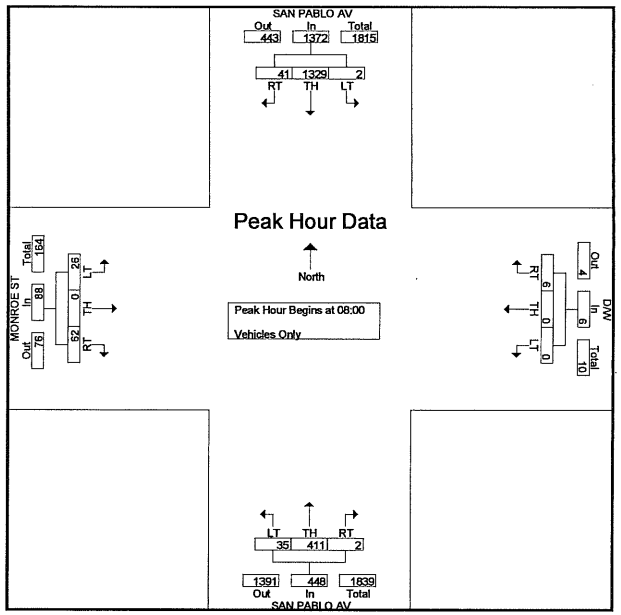

MARKS TRAFFIC DATA

CITY OF ALBANY

fp
Mietek 916-806-0250

File Name : pablo-dartmouth-a
Site Code : 9
Start Date : 5/6/2008
Page No : 1

Groups Printed- Vehicles Only

	SAN PABLO AVE Southbound				DARTMOUTH ST Westbound				SAN PABLO AVE Northbound				0 Eastbound				
Start Time	RT	TH	LT	App. Total	RT	TH	LT	App. Total	RT	TH	LT	App. Total	RT	TH	LT	App. Total	Int. Total
07:00	0	143	5	148	8	0	1	9	1	43	0	44	0	0	0	0	201
07:15	0	177	0	177	11	0	1	12	2	58	0	60	0	0	0	0	249
07:30	0	242	3	245	11	0	7	18	0	83	0	83	0	0	0	0	346
07:45	0	304	10	314	12	0	4	16	4	88	0	92	0	0	0	0	422
Total	0	866	18	884	42	0	13	55	7	272	0	279	0	0	0	0	1218
08:00	0	309	11	320	19	0	4	23	2	85	0	87	0	0	0	0	430
08:15	0	349	10	359	16	0	8	24	2	91	0	93	0	0	0	0	476
08:30	0	328	30	358	15	0	9	24	2	86	0	88	0	0	0	0	470
08:45	0	336	21	357	11	0	7	18	0	106	0	106	0	0	0	0	481
Total	0	1322	72	1394	61	0	28	89	6	368	0	374	0	0	0	0	1857
Grand Total	0	2188	90	2278	103	0	41	144	13	640	0	653	0	0	0	0	3075
Apprch %	0	96	4		71.5	0	28.5		2	98	0		0	0	0		
Total %	0	71.2	2.9	74.1	3.3	0	1.3	4.7	0.4	20.8	0	21.2	0	0	0	0	

	SAN PABLO AVE Southbound				DARTMOUTH ST Westbound				SAN PABLO AVE Northbound				0 Eastbound				
Start Time	RT	TH	LT	App. Total	RT	TH	LT	App. Total	RT	TH	LT	App. Total	RT	TH	LT	App. Total	Int. Total
Peak Hour Analysis From 07:00 to 08:45 - Peak 1 of 1																	
Peak Hour for Entire Intersection Begins at 08:00																	
08:00	0	309	11	320	19	0	4	23	2	85	0	87	0	0	0	0	430
08:15	0	349	10	359	16	0	8	24	2	91	0	93	0	0	0	0	476
08:30	0	328	30	358	15	0	9	24	2	86	0	88	0	0	0	0	470
08:45	0	336	21	357	11	0	7	18	0	106	0	106	0	0	0	0	481
Total Volume	0	1322	72	1394	61	0	28	89	6	368	0	374	0	0	0	0	1857
% App. Total	0	94.8	5.2		68.5	0	31.5		1.6	98.4	0		0	0	0		
PHF	.000	.947	.600	.971	.803	.000	.778	.927	.750	.868	.000	.882	.000	.000	.000	.000	.965

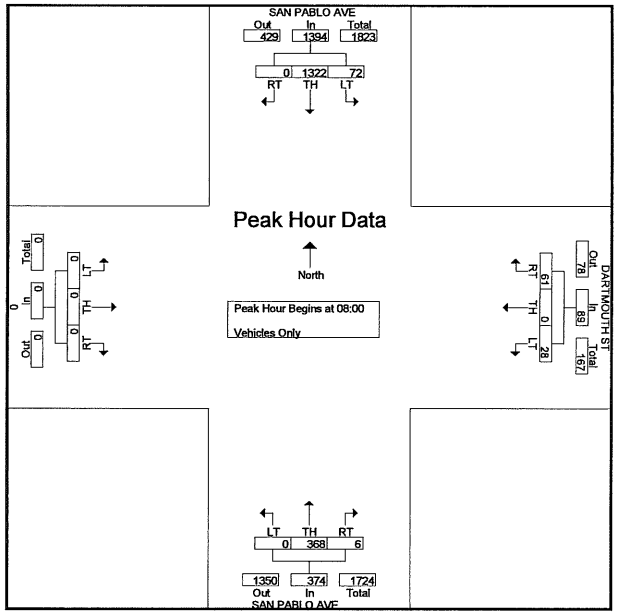

MARKS TRAFFIC DATA

CITY OF ALBANY

fp
Mietek 916-806-0250

File Name : pablo-harrison-a
Site Code : 10
Start Date : 5/8/2008
Page No : 1

Groups Printed- Vehicles Only

	SAN PABLO AVE Southbound				HARRISON ST Westbound				SAN PABLO AVE Northbound				HARRISON ST Eastbound				
Start Time	RT	TH	LT	App. Total	RT	TH	LT	App. Total	RT	TH	LT	App. Total	RT	TH	LT	App. Total	Int. Total
07:00	10	133	0	143	0	1	1	2	0	31	7	38	2	0	2	4	187
07:15	7	188	1	196	2	1	1	4	2	61	9	72	1	0	4	5	277
07:30	11	206	1	218	4	1	1	6	1	74	5	80	3	0	3	6	310
07:45	14	266	0	280	3	0	3	6	4	88	9	101	5	0	2	7	394
Total	42	793	2	837	9	3	6	18	7	254	30	291	11	0	11	22	1168
08:00	15	246	3	264	0	0	0	0	1	95	4	100	4	1	10	15	379
08:15	23	255	1	279	0	2	2	4	0	94	2	96	8	2	10	20	399
08:30	23	248	1	272	4	1	0	5	1	119	6	126	4	1	3	8	411
08:45	22	246	0	268	3	0	0	3	1	114	7	122	8	0	7	15	408
Total	83	995	5	1083	7	3	2	12	3	422	19	444	24	4	30	58	1597
Grand Total	125	1788	7	1920	16	6	8	30	10	676	49	735	35	4	41	80	2765
Apprch %	6.5	93.1	0.4		53.3	20	26.7		1.4	92	6.7		43.8	5	51.2		
Total %	4.5	64.7	0.3	69.4	0.6	0.2	0.3	1.1	0.4	24.4	1.8	26.6	1.3	0.1	1.5	2.9	

	SAN PABLO AVE Southbound				HARRISON ST Westbound				SAN PABLO AVE Northbound				HARRISON ST Eastbound				
Start Time	RT	TH	LT	App. Total	RT	TH	LT	App. Total	RT	TH	LT	App. Total	RT	TH	LT	App. Total	Int. Total
Peak Hour Analysis From 07:00 to 08:45 - Peak 1 of 1																	
Peak Hour for Entire Intersection Begins at 08:00																	
08:00	15	246	3	264	0	0	0	0	1	95	4	100	4	1	10	15	379
08:15	23	255	1	279	0	2	2	4	0	94	2	96	8	2	10	20	399
08:30	23	248	1	272	4	1	0	5	1	119	6	126	4	1	3	8	411
08:45	22	246	0	268	3	0	0	3	1	114	7	122	8	0	7	15	408
Total Volume	83	995	5	1083	7	3	2	12	3	422	19	444	24	4	30	58	1597
% App. Total	7.7	91.9	0.5		58.3	25	16.7		0.7	95	4.3		41.4	6.9	51.7		
PHF	.902	.975	.417	.970	.438	.375	.250	.600	.750	.887	.679	.881	.750	.500	.750	.725	.971

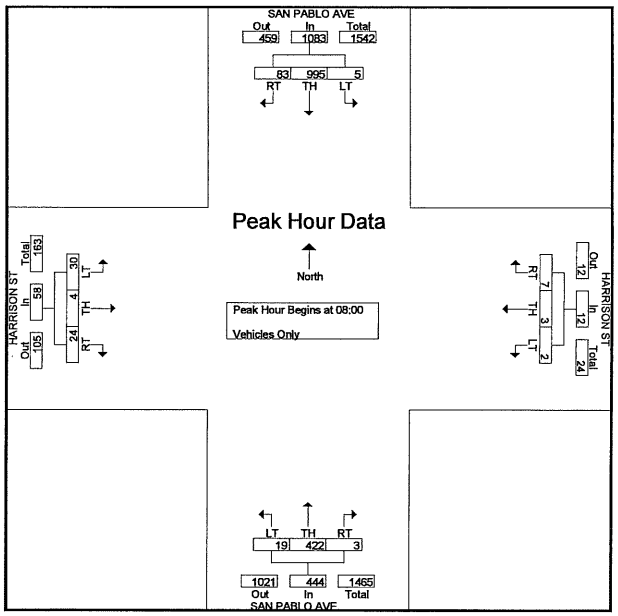

MARKS TRAFFIC DATA

CITY OF BERKELEY

fp
Mietek 916-806-0250

File Name : 80wb-gilman-a
Site Code : 11
Start Date : 5/6/2008
Page No : 1

Groups Printed- Vehicles Only

	I-580 EB OFF-RAMP Southbound					GILMAN RD Westbound					I-580 EB ON-RAMP Northbound					W. FRONTAGE RD Northeastbound					GILMAN RD Eastbound					
Start Time	RT	to Front	TH	LT	App. Total	RT	TH	to Front	LT	App. Total	RT	TH	LT	App. Total	to Prev.	RT	TH	LT	App. Total	to Front	RT	TH	LT	App. Total	Int. Total
07:00	0	116	36	126	278	0	2	11	50	63	0	0	0	0	0	9	0	0	9	1	2	2	0	5	355
07:15	4	160	57	111	332	0	8	21	47	76	0	0	0	0	0	6	0	1	7	0	1	1	0	2	417
07:30	7	171	58	118	354	0	6	34	66	106	0	0	0	0	0	5	0	0	5	1	0	2	0	3	468
07:45	3	163	43	136	345	0	4	60	68	132	0	0	0	0	0	7	0	0	7	2	2	4	0	8	492
Total	14	610	194	491	1309	0	20	126	231	377	0	0	0	0	0	27	0	1	28	4	5	9	0	18	1732
08:00	2	165	42	146	355	0	7	55	63	125	0	0	0	0	0	4	0	1	5	1	2	2	0	5	490
08:15	3	143	42	108	296	0	10	57	68	135	0	0	0	0	0	9	0	0	9	2	4	4	0	10	450
08:30	5	155	42	111	313	0	8	63	70	141	0	0	0	0	0	10	0	0	10	1	3	6	0	10	474
08:45	4	173	24	147	348	0	5	66	61	132	0	0	0	0	0	10	0	0	10	0	1	7	0	8	498
Total	14	636	150	512	1312	0	30	241	262	533	0	0	0	0	0	33	0	1	34	4	10	19	0	33	1912
Grand Total	28	1246	344	1003	2621	0	50	367	493	910	0	0	0	0	0	60	0	2	62	8	15	28	0	51	3644
Apprch %	1.1	47.5	13.1	38.3		0	5.5	40.3	54.2		0	0	0		0	96.8	0	3.2		15.7	29.4	54.9	0		
Total %	0.8	34.2	9.4	27.5	71.9	0	1.4	10.1	13.5	25	0	0	0	0	0	1.6	0	0.1	1.7	0.2	0.4	0.8	0	1.4	

	I-580 EB OFF-RAMP Southbound					GILMAN RD Westbound					I-580 EB ON-RAMP Northbound					W. FRONTAGE RD Northeastbound					GILMAN RD Eastbound					
Start Time	RT	to Front	TH	LT	App. Total	RT	TH	to Front	LT	App. Total	RT	TH	LT	App. Total	to Prev.	RT	TH	LT	App. Total	to Front	RT	TH	LT	App. Total	Int. Total
Peak Hour Analysis From 07:00 to 08:45 - Peak 1 of 1																										
Peak Hour for Entire Intersection Begins at 08:00																										
08:00	2	165	42	146	355	0	7	55	63	125	0	0	0	0	0	4	0	1	5	1	2	2	0	5	490
08:15	3	143	42	108	296	0	10	57	68	135	0	0	0	0	0	9	0	0	9	2	4	4	0	10	450
08:30	5	155	42	111	313	0	8	63	70	141	0	0	0	0	0	10	0	0	10	1	3	6	0	10	474
08:45	4	173	24	147	348	0	5	66	61	132	0	0	0	0	0	10	0	0	10	0	1	7	0	8	498
Total Volume	14	636	150	512	1312	0	30	241	262	533	0	0	0	0	0	33	0	1	34	4	10	19	0	33	1912
% App. Total																										
PHF	.700	.919	.893	.871	.924	.000	.750	.913	.936	.945	.000	.000	.000	.000	.000	.825	.000	.250	.850	.500	.625	.679	.000	.825	.960

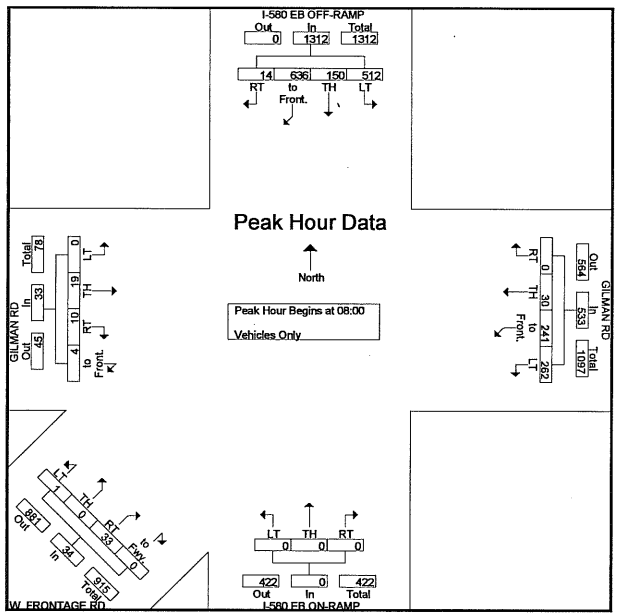

MARKS TRAFFIC DATA

CITY OF BERKELEY

fp
Mietek 916-806-0250

File Name : 80eb-gilman-a
Site Code : 12
Start Date : 5/6/2008
Page No : 1

Groups Printed- Vehicles Only

	I-80 EB ON-RAMP Southbound				GILMAN ST Westbound				I-80 EB OFF-RAMP Northbound				GILMAN ST Eastbound				
Start Time	RT	TH	LT	App. Total	RT	TH	LT	App. Total	RT	TH	LT	App. Total	RT	TH	LT	App. Total	Int. Total
07:00	0	0	0	0	42	62	0	104	65	2	2	69	0	126	10	136	309
07:15	0	0	0	0	66	66	0	132	78	0	8	86	0	112	8	120	338
07:30	0	0	0	0	57	99	0	156	73	1	6	80	0	124	5	129	365
07:45	0	0	0	0	91	115	0	206	82	1	4	87	0	138	8	146	439
Total	0	0	0	0	256	342	0	598	298	4	20	322	0	500	31	531	1451
08:00	0	0	0	0	75	116	0	191	73	2	7	82	0	146	7	153	426
08:15	0	0	0	0	101	131	0	232	81	1	6	88	0	108	15	123	443
08:30	0	0	0	0	79	137	0	216	87	0	5	92	0	119	11	130	438
08:45	0	0	0	0	71	136	0	207	94	0	5	99	0	150	16	166	472
Total	0	0	0	0	326	520	0	846	335	3	23	361	0	523	49	572	1779
Grand Total	0	0	0	0	582	862	0	1444	633	7	43	683	0	1023	80	1103	3230
Apprch %	0	0	0		40.3	59.7	0		92.7	1	6.3		0	92.7	7.3		
Total %	0	0	0	0	18	26.7	0	44.7	19.6	0.2	1.3	21.1	0	31.7	2.5	34.1	

	I-80 EB ON-RAMP Southbound				GILMAN ST Westbound				I-80 EB OFF-RAMP Northbound				GILMAN ST Eastbound				
Start Time	RT	TH	LT	App. Total	RT	TH	LT	App. Total	RT	TH	LT	App. Total	RT	TH	LT	App. Total	Int. Total
Peak Hour Analysis From 07:00 to 08:45 - Peak 1 of 1																	
Peak Hour for Entire Intersection Begins at 08:00																	
08:00	0	0	0	0	75	116	0	191	73	2	7	82	0	146	7	153	426
08:15	0	0	0	0	101	131	0	232	81	1	6	88	0	108	15	123	443
08:30	0	0	0	0	79	137	0	216	87	0	5	92	0	119	11	130	438
08:45	0	0	0	0	71	136	0	207	94	0	5	99	0	150	16	166	472
Total Volume	0	0	0	0	326	520	0	846	335	3	23	361	0	523	49	572	1779
% App. Total	0	0	0		38.5	61.5	0		92.8	0.8	6.4		0	91.4	8.6		
PHF	.000	.000	.000	.000	.807	.949	.000	.912	.891	.375	.821	.912	.000	.872	.766	.861	.942

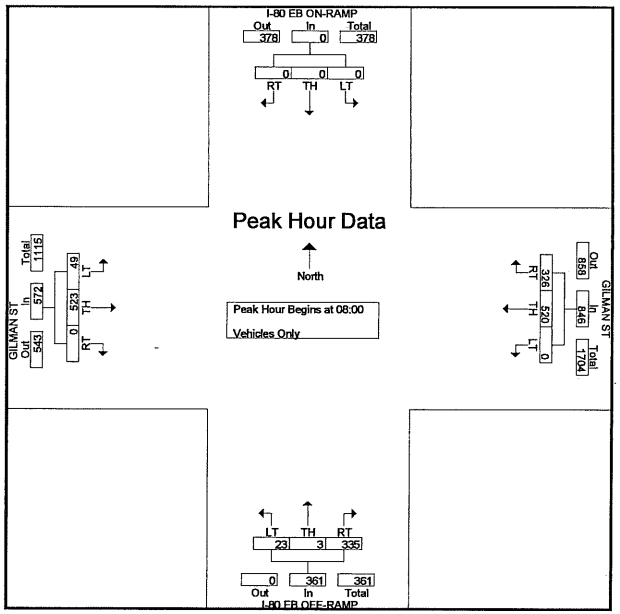

MARKS TRAFFIC DATA

CITY OF BERKELEY

fp
Mietek 916-806-0250

File Name : eastshore-gilman-a
Site Code : 13
Start Date : 5/6/2008
Page No : 1

Groups Printed- Vehicles Only

	EASTSHORE HWY Southbound				GILMAN ST Westbound				EASTSHORE HWY Northbound				GILMAN ST Eastbound				
Start Time	RT	TH	LT	App. Total	RT	TH	LT	App. Total	RT	TH	LT	App. Total	RT	TH	LT	App. Total	Int. Total
07:00	9	6	9	24	3	89	1	93	2	0	10	12	56	130	8	194	323
07:15	19	8	9	36	2	99	1	102	2	0	15	17	46	145	6	197	352
07:30	31	3	6	40	4	91	3	98	0	2	15	17	62	135	9	206	361
07:45	54	11	9	74	2	139	0	141	1	0	8	9	80	142	6	228	452
Total	113	28	33	174	11	418	5	434	5	2	48	55	244	552	29	825	1488
08:00	49	23	12	84	4	133	2	139	3	2	7	12	90	129	6	225	460
08:15	61	30	7	98	4	144	3	151	2	0	8	10	60	131	7	198	457
08:30	64	17	15	96	4	142	3	149	2	0	12	14	65	143	2	210	469
08:45	72	24	10	106	22	127	1	150	9	3	11	23	71	170	4	245	524
Total	246	94	44	384	34	546	9	589	16	5	38	59	286	573	19	878	1910
Grand Total	359	122	77	558	45	964	14	1023	21	7	86	114	530	1125	48	1703	3398
Apprch %	64.3	21.9	13.8		4.4	94.2	1.4		18.4	6.1	75.4		31.1	66.1	2.8		
Total %	10.6	3.6	2.3	16.4	1.3	28.4	0.4	30.1	0.6	0.2	2.5	3.4	15.6	33.1	1.4	50.1	

	EASTSHORE HWY Southbound				GILMAN ST Westbound				EASTSHORE HWY Northbound				GILMAN ST Eastbound				
Start Time	RT	TH	LT	App. Total	RT	TH	LT	App. Total	RT	TH	LT	App. Total	RT	TH	LT	App. Total	Int. Total
Peak Hour Analysis From 07:00 to 08:45 - Peak 1 of 1																	
Peak Hour for Entire Intersection Begins at 08:00																	
08:00	49	23	12	84	4	133	2	139	3	2	7	12	90	129	6	225	460
08:15	61	30	7	98	4	144	3	151	2	0	8	10	60	131	7	198	457
08:30	64	17	15	96	4	142	3	149	2	0	12	14	65	143	2	210	469
08:45	72	24	10	106	22	127	1	150	9	3	11	23	71	170	4	245	524
Total Volume	246	94	44	384	34	546	9	589	16	5	38	59	286	573	19	878	1910
% App. Total	64.1	24.5	11.5		5.8	92.7	1.5		27.1	8.5	64.4		32.6	65.3	2.2		
PHF	.854	.783	.733	.906	.386	.948	.750	.975	.444	.417	.792	.641	.794	.843	.679	.896	.911

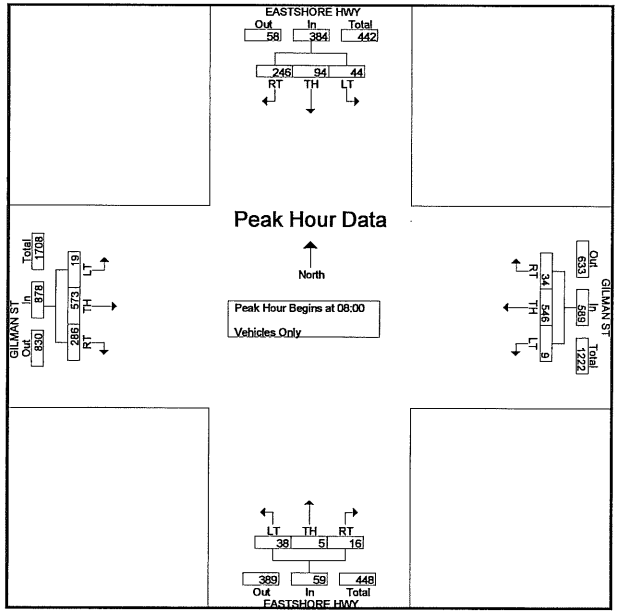

MARKS TRAFFIC DATA

CITY OF BERKELEY

fp
Mietek 916-806-0250

File Name : 6-gilman-a
Site Code : 14
Start Date : 5/6/2008
Page No : 1

Groups Printed- Vehicles Only

	6th ST Southbound				GILMAN ST Westbound				6th ST Northbound				GILMAN ST Eastbound				
Start Time	RT	TH	LT	App. Total	RT	TH	LT	App. Total	RT	TH	LT	App. Total	RT	TH	LT	App. Total	Int. Total
07:00	8	15	2	25	3	55	5	63	1	13	16	30	12	58	14	84	202
07:15	4	4	4	12	3	66	11	80	4	3	16	23	10	80	5	95	210
07:30	4	10	3	17	3	94	10	107	5	1	23	29	10	85	8	103	256
07:45	8	9	3	20	4	105	15	124	15	2	32	49	16	90	6	112	305
Total	24	38	12	74	13	320	41	374	25	19	87	131	48	313	33	394	973
08:00	4	8	1	13	3	101	7	111	5	2	29	36	28	63	7	98	258
08:15	9	21	2	32	1	117	19	137	6	4	38	48	15	81	6	102	319
08:30	10	13	0	23	1	111	21	133	10	7	35	52	16	100	8	124	332
08:45	6	18	3	27	1	107	17	125	10	3	38	51	28	111	7	146	349
Total	29	60	6	95	6	436	64	506	31	16	140	187	87	355	28	470	1258
Grand Total	53	98	18	169	19	756	105	880	56	35	227	318	135	668	61	864	2231
Apprch %	31.4	58	10.7		2.2	85.9	11.9		17.6	11	71.4		15.6	77.3	7.1		
Total %	2.4	4.4	0.8	7.6	0.9	33.9	4.7	39.4	2.5	1.6	10.2	14.3	6.1	29.9	2.7	38.7	

	6th ST Southbound				GILMAN ST Westbound				6th ST Northbound				GILMAN ST Eastbound				
Start Time	RT	TH	LT	App. Total	RT	TH	LT	App. Total	RT	TH	LT	App. Total	RT	TH	LT	App. Total	Int. Total
Peak Hour Analysis From 07:00 to 08:45 - Peak 1 of 1																	
Peak Hour for Entire Intersection Begins at 08:00																	
08:00	4	8	1	13	3	101	7	111	5	2	29	36	28	63	7	98	258
08:15	9	21	2	32	1	117	19	137	6	4	38	48	15	81	6	102	319
08:30	10	13	0	23	1	111	21	133	10	7	35	52	16	100	8	124	332
08:45	6	18	3	27	1	107	17	125	10	3	38	51	28	111	7	146	349
Total Volume	29	60	6	95	6	436	64	506	31	16	140	187	87	355	28	470	1258
% App. Total	30.5	63.2	6.3		1.2	86.2	12.6		16.6	8.6	74.9		18.5	75.5	6		
PHF	.725	.714	.500	.742	.500	.932	.762	.923	.775	.571	.921	.899	.777	.800	.875	.805	.901

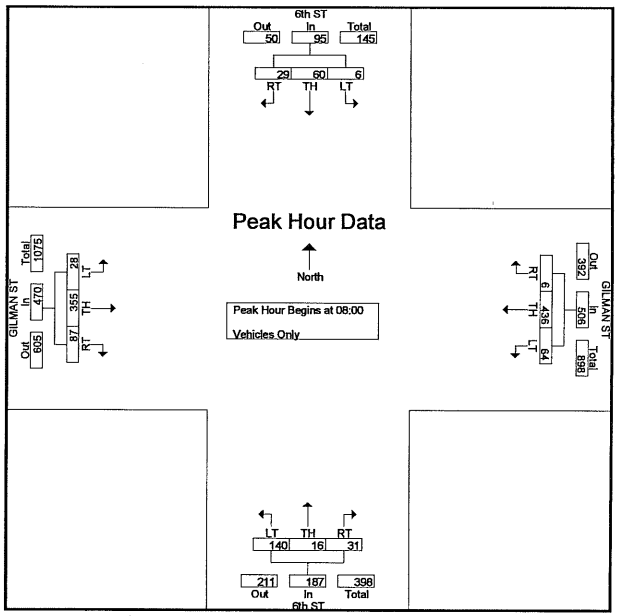

MARKS TRAFFIC DATA

CITY OF BERKELEY

fp
Mietek 916-806-0250

File Name : 8-gilman-a
Site Code : 15
Start Date : 5/6/2008
Page No : 1

Groups Printed- Vehicles Only

	8th ST Southbound				GILMAN ST Westbound				8th ST Northbound				GILMAN ST Eastbound				
Start Time	RT	TH	LT	App. Total	RT	TH	LT	App. Total	RT	TH	LT	App. Total	RT	TH	LT	App. Total	Int. Total
07:00	1	0	1	2	1	62	0	63	1	0	1	2	1	58	9	68	135
07:15	4	1	0	5	5	79	1	85	0	1	1	2	1	67	5	73	165
07:30	6	3	3	12	5	103	1	109	0	2	2	4	3	81	4	88	213
07:45	4	3	1	8	9	131	0	140	0	2	0	2	3	104	5	112	262
Total	15	7	5	27	20	375	2	397	1	5	4	10	8	310	23	341	775
08:00	13	10	5	28	3	111	1	115	2	1	3	6	1	52	11	64	213
08:15	11	7	8	26	3	116	1	120	1	6	2	9	3	72	8	83	238
08:30	7	7	9	23	1	118	2	121	3	3	2	8	2	93	8	103	255
08:45	10	10	5	25	3	122	4	129	0	3	0	3	3	107	10	120	277
Total	41	34	27	102	10	467	8	485	6	13	7	26	9	324	37	370	983
Grand Total	56	41	32	129	30	842	10	882	7	18	11	36	17	634	60	711	1758
Apprch %	43.4	31.8	24.8		3.4	95.5	1.1		19.4	50	30.6		2.4	89.2	8.4		
Total %	3.2	2.3	1.8	7.3	1.7	47.9	0.6	50.2	0.4	1	0.6	2	1	36.1	3.4	40.4	

	8th ST Southbound				GILMAN ST Westbound				8th ST Northbound				GILMAN ST Eastbound				
Start Time	RT	TH	LT	App. Total	RT	TH	LT	App. Total	RT	TH	LT	App. Total	RT	TH	LT	App. Total	Int. Total
Peak Hour Analysis From 07:00 to 08:45 - Peak 1 of 1																	
Peak Hour for Entire Intersection Begins at 08:00																	
08:00	13	10	5	28	3	111	1	115	2	1	3	6	1	52	11	64	213
08:15	11	7	8	26	3	116	1	120	1	6	2	9	3	72	8	83	238
08:30	7	7	9	23	1	118	2	121	3	3	2	8	2	93	8	103	255
08:45	10	10	5	25	3	122	4	129	0	3	0	3	3	107	10	120	277
Total Volume	41	34	27	102	10	467	8	485	6	13	7	26	9	324	37	370	983
% App. Total	40.2	33.3	26.5		2.1	96.3	1.6		23.1	50	26.9		2.4	87.6	10		
PHF	.788	.850	.750	.911	.833	.957	.500	.940	.500	.542	.583	.722	.750	.757	.841	.771	.887

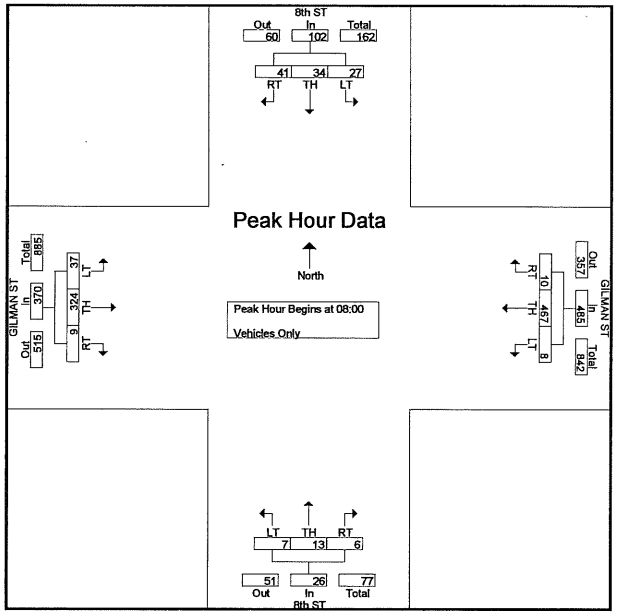

MARKS TRAFFIC DATA

CITY OF BERKELEY

fp
Mietek 916-806-0250

File Name : pablo-gilman-a
Site Code : 16
Start Date : 5/8/2008
Page No : 1

Groups Printed- Vehicles Only

	SAN PABLO AVE Southbound				GILMAN ST Westbound				SAN PABLO AVE Northbound				GILMAN ST Eastbound				
Start Time	RT	TH	LT	App. Total	RT	TH	LT	App. Total	RT	TH	LT	App. Total	RT	TH	LT	App. Total	Int. Total
07:00	12	113	5	130	2	31	5	38	2	27	13	42	25	33	10	68	278
07:15	25	162	15	202	4	43	2	49	2	52	14	68	28	32	14	74	393
07:30	17	185	20	222	5	58	3	66	1	56	22	79	38	61	11	110	477
07:45	25	215	50	290	10	95	13	118	1	83	22	106	44	81	11	136	650
Total	79	675	90	844	21	227	23	271	6	218	71	295	135	207	46	388	1798
08:00	28	231	12	271	4	86	5	95	3	86	29	118	44	53	11	108	592
08:15	25	236	11	272	7	83	14	104	2	74	29	105	42	55	8	105	586
08:30	32	229	17	278	10	69	12	91	5	95	18	118	45	64	22	131	618
08:45	44	201	20	265	18	72	9	99	7	93	35	135	57	112	24	193	692
Total	129	897	60	1086	39	310	40	389	17	348	111	476	188	284	65	537	2488
Grand Total	208	1572	150	1930	60	537	63	660	23	566	182	771	323	491	111	925	4286
Apprch %	10.8	81.5	7.8		9.1	81.4	9.5		3	73.4	23.6		34.9	53.1	12		
Total %	4.9	36.7	3.5	45	1.4	12.5	1.5	15.4	0.5	13.2	4.2	18	7.5	11.5	2.6	21.6	

	SAN PABLO AVE Southbound				GILMAN ST Westbound				SAN PABLO AVE Northbound				GILMAN ST Eastbound				
Start Time	RT	TH	LT	App. Total	RT	TH	LT	App. Total	RT	TH	LT	App. Total	RT	TH	LT	App. Total	Int. Total
Peak Hour Analysis From 07:00 to 08:45 - Peak 1 of 1																	
Peak Hour for Entire Intersection Begins at 08:00																	
08:00	28	231	12	271	4	86	5	95	3	86	29	118	44	53	11	108	592
08:15	25	236	11	272	7	83	14	104	2	74	29	105	42	55	8	105	586
08:30	32	229	17	278	10	69	12	91	5	95	18	118	45	64	22	131	618
08:45	44	201	20	265	18	72	9	99	7	93	35	135	57	112	24	193	692
Total Volume	129	897	60	1086	39	310	40	389	17	348	111	476	188	284	65	537	2488
% App. Total	11.9	82.6	5.5		10	79.7	10.3		3.6	73.1	23.3		35	52.9	12.1		
PHF	.733	.950	.750	.977	.542	.901	.714	.935	.607	.916	.793	.881	.825	.634	.677	.696	.899

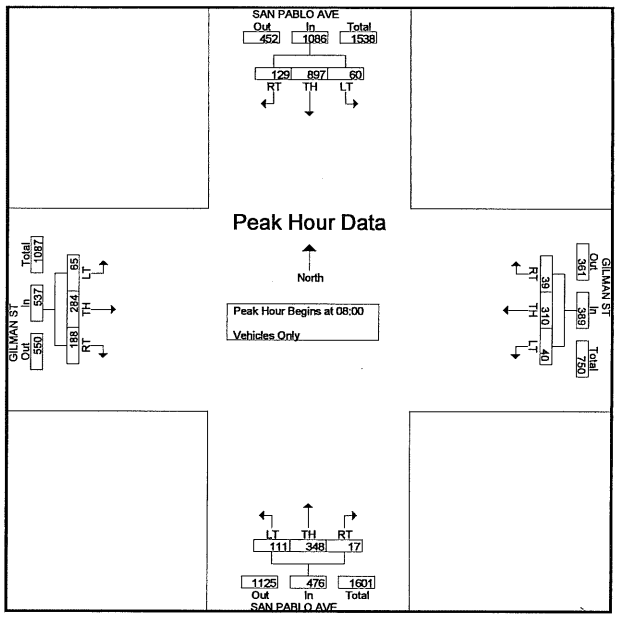

MARKS TRAFFIC DATA

CITY OF BERKELEY

fp
Mietek 916-806-0250

File Name : gilman-hopkins-a
Site Code : 17
Start Date : 5/8/2008
Page No : 1

Groups Printed- Vehicles Only

	GILMAN ST Southbound				HOPKINS ST Westbound				0 Northbound				HOPKINS ST Eastbound				
Start Time	RT	TH	LT	App. Total	RT	TH	LT	App. Total	RT	TH	LT	App. Total	RT	TH	LT	App. Total	Int. Total
07:00	0	0	47	47	31	13	0	44	0	0	0	0	0	7	0	7	98
07:15	3	0	67	70	46	16	0	62	0	0	0	0	0	13	1	14	146
07:30	2	0	104	106	59	26	0	85	0	0	0	0	0	34	2	36	227
07:45	7	0	100	107	83	46	0	129	0	0	0	0	0	46	3	49	285
Total	12	0	318	330	219	101	0	320	0	0	0	0	0	100	6	106	756
08:00	4	0	94	98	65	38	0	103	0	0	0	0	0	30	5	35	236
08:15	4	0	105	109	76	54	0	130	0	0	0	0	0	25	5	30	269
08:30	4	0	89	93	70	50	0	120	0	0	0	0	0	37	2	39	252
08:45	0	0	100	100	77	44	0	121	0	0	0	0	0	39	4	43	264
Total	12	0	388	400	288	186	0	474	0	0	0	0	0	131	16	147	1021
Grand Total	24	0	706	730	507	287	0	794	0	0	0	0	0	231	22	253	1777
Apprch %	3.3	0	96.7		63.9	36.1	0		0	0	0		0	91.3	8.7		
Total %	1.4	0	39.7	41.1	28.5	16.2	0	44.7	0	0	0	0	0	13	1.2	14.2	

	GILMAN ST Southbound				HOPKINS ST Westbound				0 Northbound				HOPKINS ST Eastbound				
Start Time	RT	TH	LT	App. Total	RT	TH	LT	App. Total	RT	TH	LT	App. Total	RT	TH	LT	App. Total	Int. Total
Peak Hour Analysis From 07:00 to 08:45 - Peak 1 of 1																	
Peak Hour for Entire Intersection Begins at 07:45																	
07:45	7	0	100	107	83	46	0	129	0	0	0	0	0	46	3	49	285
08:00	4	0	94	98	65	38	0	103	0	0	0	0	0	30	5	35	236
08:15	4	0	105	109	76	54	0	130	0	0	0	0	0	25	5	30	269
08:30	4	0	89	93	70	50	0	120	0	0	0	0	0	37	2	39	252
Total Volume	19	0	388	407	294	188	0	482	0	0	0	0	0	138	15	153	1042
% App. Total	4.7	0	95.3		61	39	0		0	0	0		0	90.2	9.8		
PHF	.679	.000	.924	.933	.886	.870	.000	.927	.000	.000	.000	.000	.000	.750	.750	.781	.914

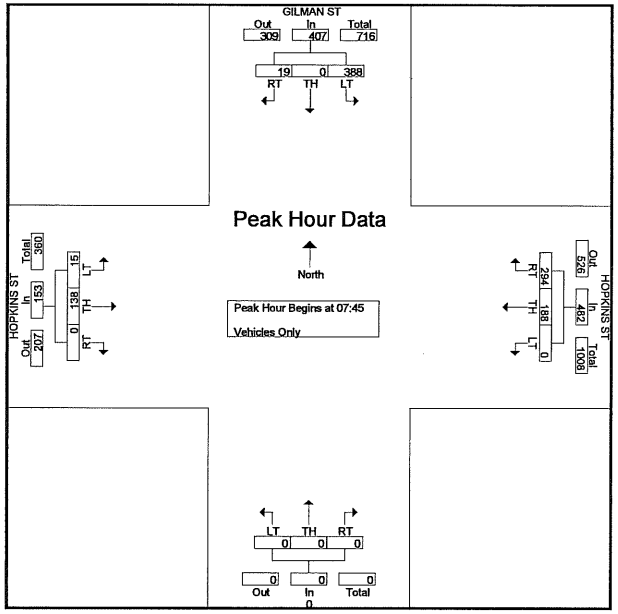

MARKS TRAFFIC DATA

CITY OF ALBANY

fp
Mietek 916-806-0250

File Name : pablo-solano-p
Site Code : 1
Start Date : 5/6/2008
Page No : 1

Groups Printed- Vehicles Only

	SAN PABLO AVE Southbound				SOLANO AVE Westbound				SAN PABLO AVE Northbound				SOLANO AVE Eastbound				
Start Time	RT	TH	LT	App. Total	RT	TH	LT	App. Total	RT	TH	LT	App. Total	RT	TH	LT	App. Total	Int. Total
16:00	13	165	28	206	43	47	43	133	44	217	6	267	17	46	27	90	696
16:15	26	157	26	209	40	38	33	111	31	195	3	229	11	49	37	97	646
16:30	21	193	26	240	43	33	32	108	35	249	6	290	15	52	33	100	738
16:45	19	143	20	182	47	46	43	136	45	199	7	251	8	45	36	89	658
Total	79	658	100	837	173	164	151	488	155	860	22	1037	51	192	133	376	2738
17:00	19	166	21	206	39	49	33	121	25	189	3	217	8	36	38	82	626
17:15	15	140	26	181	25	41	41	107	32	239	3	274	15	62	43	120	682
17:30	26	172	25	223	28	52	31	111	35	222	4	261	11	52	43	106	701
17:45	16	185	25	226	28	40	38	106	33	212	4	249	12	54	42	108	689
Total	76	663	97	836	120	182	143	445	125	862	14	1001	46	204	166	416	2698
Grand Total	155	1321	197	1673	293	346	294	933	280	1722	36	2038	97	396	299	792	5436
Apprch %	9.3	79	11.8		31.4	37.1	31.5		13.7	84.5	1.8		12.2	50	37.8		
Total %	2.9	24.3	3.6	30.8	5.4	6.4	5.4	17.2	5.2	31.7	0.7	37.5	1.8	7.3	5.5	14.6	

	SAN PABLO AVE Southbound				SOLANO AVE Westbound				SAN PABLO AVE Northbound				SOLANO AVE Eastbound				
Start Time	RT	TH	LT	App. Total	RT	TH	LT	App. Total	RT	TH	LT	App. Total	RT	TH	LT	App. Total	Int. Total
Peak Hour Analysis From 16:00 to 17:45 - Peak 1 of 1																	
Peak Hour for Entire Intersection Begins at 16:00																	
16:00	13	165	28	206	43	47	43	133	44	217	6	267	17	46	27	90	696
16:15	26	157	26	209	40	38	33	111	31	195	3	229	11	49	37	97	646
16:30	21	193	26	240	43	33	32	108	35	249	6	290	15	52	33	100	738
16:45	19	143	20	182	47	46	43	136	45	199	7	251	8	45	36	89	658
Total Volume	79	658	100	837	173	164	151	488	155	860	22	1037	51	192	133	376	2738
% App. Total	9.4	78.6	11.9		35.5	33.6	30.9		14.9	82.9	2.1		13.6	51.1	35.4		
PHF	.760	.852	.893	.872	.920	.872	.878	.897	.861	.863	.786	.894	.750	.923	.899	.940	.928

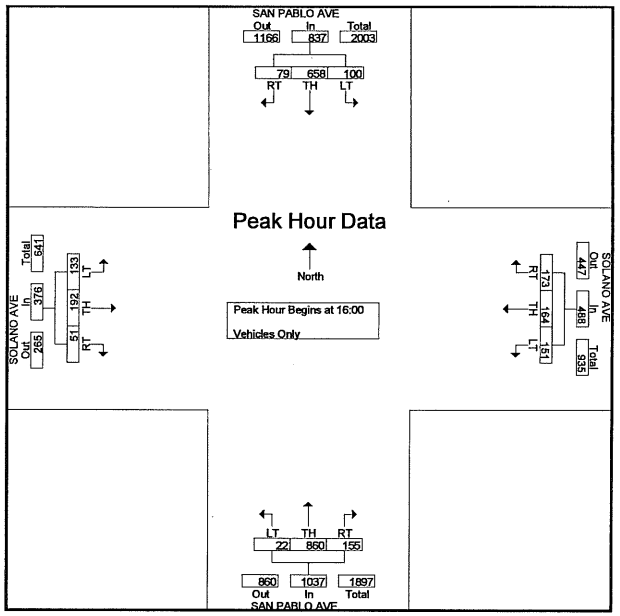

MARKS TRAFFIC DATA

CITY OF ALBANY

fp
Mietek 916-806-0250

File Name : 80wb-buchanan-p
Site Code : 2
Start Date : 5/8/2008
Page No : 1

Groups Printed- Vehicles Only

	I-80 WB OFF-RAMP Southbound				BUCHANAN ST Westbound				I-80 WB ON-RAMP Northbound				BUCHANAN ST Eastbound				
Start Time	RT	TH	LT	App. Total	RT	TH	LT	App. Total	RT	TH	LT	App. Total	RT	TH	LT	App. Total	Int. Total
16:00	0	1	73	74	0	9	95	104	0	0	0	0	3	4	0	7	185
16:15	1	6	91	98	0	8	79	87	0	0	0	0	1	7	0	8	193
16:30	4	1	85	90	0	8	84	92	0	0	0	0	1	4	0	5	187
16:45	1	1	95	97	0	1	114	115	0	0	0	0	2	5	0	7	219
Total	6	9	344	359	0	26	372	398	0	0	0	0	7	20	0	27	784
17:00	0	6	118	124	0	5	91	96	0	0	0	0	4	8	0	12	232
17:15	0	1	108	109	0	6	92	98	0	0	0	0	4	7	0	11	218
17:30	0	2	120	122	0	7	97	104	0	0	0	0	1	5	0	6	232
17:45	1	2	113	116	0	6	90	96	0	0	0	0	2	9	0	11	223
Total	1	11	459	471	0	24	370	394	0	0	0	0	11	29	0	40	905
Grand Total	7	20	803	830	0	50	742	792	0	0	0	0	18	49	0	67	1689
Apprch %	0.8	2.4	96.7		0	6.3	93.7		0	0	0		26.9	73.1	0		
Total %	0.4	1.2	47.5	49.1	0	3	43.9	46.9	0	0	0	0	1.1	2.9	0	4	

	I-80 WB OFF-RAMP Southbound				BUCHANAN ST Westbound				I-80 WB ON-RAMP Northbound				BUCHANAN ST Eastbound				
Start Time	RT	TH	LT	App. Total	RT	TH	LT	App. Total	RT	TH	LT	App. Total	RT	TH	LT	App. Total	Int. Total
Peak Hour Analysis From 16:00 to 17:45 - Peak 1 of 1																	
Peak Hour for Entire Intersection Begins at 17:00																	
17:00	0	6	118	124	0	5	91	96	0	0	0	0	4	8	0	12	232
17:15	0	1	108	109	0	6	92	98	0	0	0	0	4	7	0	11	218
17:30	0	2	120	122	0	7	97	104	0	0	0	0	1	5	0	6	232
17:45	1	2	113	116	0	6	90	96	0	0	0	0	2	9	0	11	223
Total Volume	1	11	459	471	0	24	370	394	0	0	0	0	11	29	0	40	905
% App. Total	0.2	2.3	97.5		0	6.1	93.9		0	0	0		27.5	72.5	0		
PHF	.250	.458	.956	.950	.000	.857	.954	.947	.000	.000	.000	.000	.688	.806	.000	.833	.975

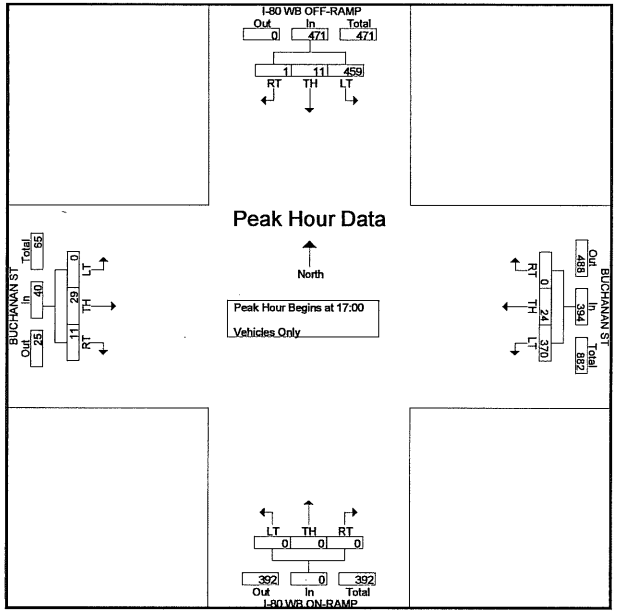

MARKS TRAFFIC DATA

CITY OF ALBANY

fp
Mietek 916-806-0250

File Name : 80eb-buchanan-p
Site Code : 3
Start Date : 5/8/2008
Page No : 1

Groups Printed- Vehicles Only

	I-80 EB ON-RAMP Southbound				BUCHANAN ST Westbound				I-80 EB OFF-RAMP Northbound				BUCHANAN ST Eastbound				
Start Time	RT	TH	LT	App. Total	RT	TH	LT	App. Total	RT	TH	LT	App. Total	RT	TH	LT	App. Total	Int. Total
16:00	0	0	0	0	173	96	0	269	103	13	6	122	0	73	2	75	466
16:15	0	0	0	0	175	78	0	253	91	3	5	99	0	95	3	98	450
16:30	0	0	0	0	172	88	0	260	106	7	0	113	0	85	3	88	461
16:45	0	0	0	0	169	110	0	279	99	8	1	108	0	97	3	100	487
Total	0	0	0	0	689	372	0	1061	399	31	12	442	0	350	11	361	1864
17:00	0	0	0	0	189	96	0	285	103	8	1	112	0	114	14	128	525
17:15	0	0	0	0	205	93	0	298	91	22	5	118	0	116	1	117	533
17:30	0	0	0	0	175	102	0	277	120	2	3	125	0	127	2	129	531
17:45	0	0	0	0	150	94	0	244	124	6	3	133	0	111	10	121	498
Total	0	0	0	0	719	385	0	1104	438	38	12	488	0	468	27	495	2087
Grand Total	0	0	0	0	1408	757	0	2165	837	69	24	930	0	818	38	856	3951
Apprch %	0	0	0		65	35	0		90	7.4	2.6		0	95.6	4.4		
Total %	0	0	0	0	35.6	19.2	0	54.8	21.2	1.7	0.6	23.5	0	20.7	1	21.7	

	I-80 EB ON-RAMP Southbound				BUCHANAN ST Westbound				I-80 EB OFF-RAMP Northbound				BUCHANAN ST Eastbound				
Start Time	RT	TH	LT	App. Total	RT	TH	LT	App. Total	RT	TH	LT	App. Total	RT	TH	LT	App. Total	Int. Total
Peak Hour Analysis From 16:00 to 17:45 - Peak 1 of 1																	
Peak Hour for Entire Intersection Begins at 17:00																	
17:00	0	0	0	0	189	96	0	285	103	8	1	112	0	114	14	128	525
17:15	0	0	0	0	205	93	0	298	91	22	5	118	0	116	1	117	533
17:30	0	0	0	0	175	102	0	277	120	2	3	125	0	127	2	129	531
17:45	0	0	0	0	150	94	0	244	124	6	3	133	0	111	10	121	498
Total Volume	0	0	0	0	719	385	0	1104	438	38	12	488	0	468	27	495	2087
% App. Total	0	0	0		65.1	34.9	0		89.8	7.8	2.5		0	94.5	5.5		
PHF	.000	.000	.000	.000	.877	.944	.000	.926	.883	.432	.600	.917	.000	.921	.482	.959	.979

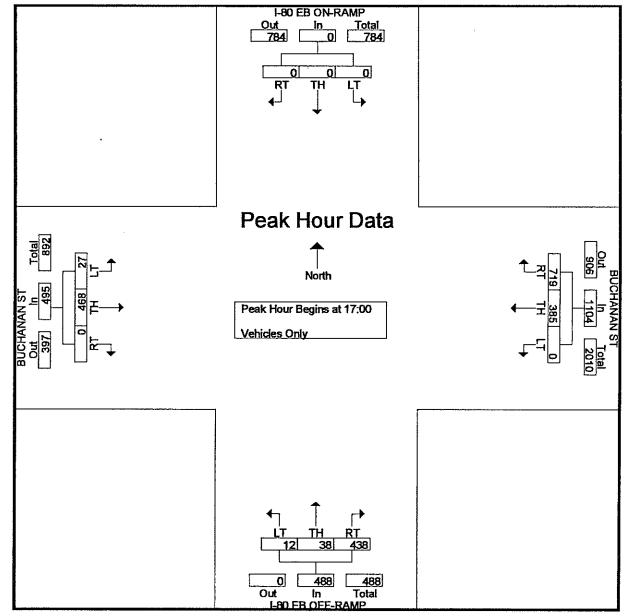

MARKS TRAFFIC DATA

CITY OF ALBANY

fp
Mietek 916-806-0250

File Name : eastshore-buchanan-p
Site Code : 4
Start Date : 5/8/2008
Page No : 1

Groups Printed- Vehicles Only

	0 Southbound				BUCHANAN ST Westbound				EASTSHORE HWY Northbound				BUCHANAN ST Eastbound				
Start Time	RT	TH	LT	App. Total	RT	TH	LT	App. Total	RT	TH	LT	App. Total	RT	TH	LT	App. Total	Int. Total
16:00	0	0	0	0	0	276	24	300	65	0	0	65	18	155	0	173	538
16:15	0	0	0	0	0	257	23	280	59	0	0	59	26	162	0	188	527
16:30	0	0	0	0	0	264	42	306	61	0	0	61	26	167	0	193	560
16:45	0	0	0	0	0	276	18	294	62	0	0	62	18	176	0	194	550
Total	0	0	0	0	0	1073	107	1180	247	0	0	247	88	660	0	748	2175
17:00	0	0	0	0	0	284	20	304	53	0	0	53	26	193	0	219	576
17:15	0	0	0	0	0	292	37	329	72	0	0	72	18	180	0	198	599
17:30	0	0	0	0	0	275	27	302	65	0	0	65	27	221	0	248	615
17:45	0	0	0	0	0	247	32	279	66	0	0	66	27	205	0	232	577
Total	0	0	0	0	0	1098	116	1214	256	0	0	256	98	799	0	897	2367
Grand Total	0	0	0	0	0	2171	223	2394	503	0	0	503	186	1459	0	1645	4542
Apprch %	0	0	0		0	90.7	9.3		100	0	0		11.3	88.7	0		
Total %	0	0	0	0	0	47.8	4.9	52.7	11.1	0	0	11.1	4.1	32.1	0	36.2	

	0 Southbound				BUCHANAN ST Westbound				EASTSHORE HWY Northbound				BUCHANAN ST Eastbound				
Start Time	RT	TH	LT	App. Total	RT	TH	LT	App. Total	RT	TH	LT	App. Total	RT	TH	LT	App. Total	Int. Total
Peak Hour Analysis From 16:00 to 17:45 - Peak 1 of 1																	
Peak Hour for Entire Intersection Begins at 17:00																	
17:00	0	0	0	0	0	284	20	304	53	0	0	53	26	193	0	219	576
17:15	0	0	0	0	0	292	37	329	72	0	0	72	18	180	0	198	599
17:30	0	0	0	0	0	275	27	302	65	0	0	65	27	221	0	248	615
17:45	0	0	0	0	0	247	32	279	66	0	0	66	27	205	0	232	577
Total Volume	0	0	0	0	0	1098	116	1214	256	0	0	256	98	799	0	897	2367
% App. Total	0	0	0		0	90.4	9.6		100	0	0		10.9	89.1	0		
PHF	.000	.000	.000	.000	.000	.940	.784	.922	.889	.000	.000	.889	.907	.904	.000	.904	.962

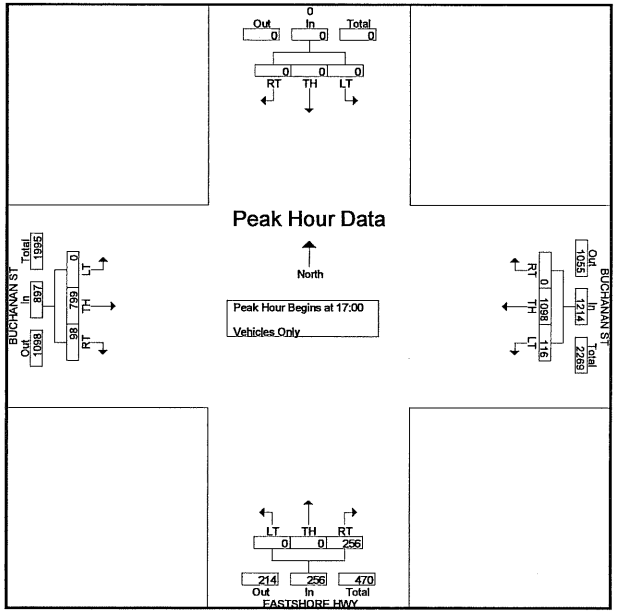

Intersection Turning Movement

Prepared by:

National Data & Surveying Services

N-S STREET: Jackson St DATE: 1/16/2008 LOCATION: City of Albany

E-W STREET: Buchanan St DAY: WEDNESDAY PROJECT# 07-7587-002

	NORTHBOUND			SOUTHBOUND			EASTBOUND			WESTBOUND			
	NL	NT	NR	SL	ST	SR	EL	ET	ER	WL	WT	WR	TOTAL
LANES:	0	1	0	0	1	0	1	2	0	1	2	0	
1:00 PM													
1:15 PM													
1:30 PM													
1:45 PM													
2:00 PM													
2:15 PM													
2:30 PM													
2:45 PM													
3:00 PM													
3:15 PM													
3:30 PM													
3:45 PM													
4:00 PM	17	18	14	2	10	23	16	231	18	5	203	3	560
4:15 PM	18	14	9	5	21	21	16	249	25	3	213	4	598
4:30 PM	22	16	10	4	19	28	9	326	38	4	219	6	701
4:45 PM	19	13	9	9	10	17	10	305	46	8	231	5	682
5:00 PM	35	23	9	10	16	23	17	312	45	7	224	13	734
5:15 PM	34	27	13	15	16	15	33	292	47	5	215	9	721
5:30 PM	30	24	6	2	27	13	16	300	35	6	205	6	670
5:45 PM	20	14	8	12	27	11	11	261	30	7	183	12	596
6:00 PM													
6:15 PM													
6:30 PM													
6:45 PM													
TOTAL VOLUMES =	NL 195	NT 149	NR 78	SL 59	ST 146	SR 151	EL 128	ET 2276	ER 284	WL 45	WT 1693	WR 58	TOTAL 5262

PM Peak Hr Begins at: 430 PM

PEAK VOLUMES =	110	79	41	38	61	83	69	1235	176	24	889	33	2838
PEAK HR. FACTOR:		0.777			0.892			0.989			0.969		0.967

CONTROL: Signalized

MARKS TRAFFIC DATA

CITY OF ALBANY

fp
Mietek 916-806-0250

File Name : pablo-buchanan-p
Site Code : 5
Start Date : 5/8/2008
Page No : 1

Groups Printed- Vehicles Only

	SAN PABLO AVE Southbound				KELLY MOORE D/W Westbound				SAN PABLO AVE Northbound				BUCHANAN ST Eastbound				
Start Time	RT	TH	LT	App. Total	RT	TH	LT	App. Total	RT	TH	LT	App. Total	RT	TH	LT	App. Total	Int. Total
16:00	45	175	0	220	0	0	1	1	0	201	11	212	3	1	38	42	475
16:15	28	183	1	212	0	0	1	1	1	194	6	201	5	0	38	43	457
16:30	34	193	3	230	0	0	0	0	1	206	16	223	4	1	39	44	497
16:45	36	214	1	251	0	0	0	0	2	221	9	232	0	0	33	33	516
Total	143	765	5	913	0	0	2	2	4	822	42	868	12	2	148	162	1945
17:00	44	194	0	238	0	0	1	1	3	238	9	250	1	0	32	33	522
17:15	36	187	0	223	1	0	0	1	1	238	12	251	4	0	33	37	512
17:30	35	195	0	230	0	0	0	0	0	256	7	263	1	0	23	24	517
17:45	37	144	0	181	0	0	0	0	1	228	10	239	0	0	38	38	458
Total	152	720	0	872	1	0	1	2	5	960	38	1003	6	0	126	132	2009
Grand Total	295	1485	5	1785	1	0	3	4	9	1782	80	1871	18	2	274	294	3954
Apprch %	16.5	83.2	0.3		25	0	75		0.5	95.2	4.3		6.1	0.7	93.2		
Total %	7.5	37.6	0.1	45.1	0	0	0.1	0.1	0.2	45.1	2	47.3	0.5	0.1	6.9	7.4	

	SAN PABLO AVE Southbound				KELLY MOORE D/W Westbound				SAN PABLO AVE Northbound				BUCHANAN ST Eastbound				
Start Time	RT	TH	LT	App. Total	RT	TH	LT	App. Total	RT	TH	LT	App. Total	RT	TH	LT	App. Total	Int. Total
Peak Hour Analysis From 16:00 to 17:45 - Peak 1 of 1																	
Peak Hour for Entire Intersection Begins at 16:45																	
16:45	36	214	1	251	0	0	0	0	2	221	9	232	0	0	33	33	516
17:00	44	194	0	238	0	0	1	1	3	238	9	250	1	0	32	33	522
17:15	36	187	0	223	1	0	0	1	1	238	12	251	4	0	33	37	512
17:30	35	195	0	230	0	0	0	0	0	256	7	263	1	0	23	24	517
Total Volume	151	790	1	942	1	0	1	2	6	953	37	996	6	0	121	127	2067
% App. Total	16	83.9	0.1		50	0	50		0.6	95.7	3.7		4.7	0	95.3		
PHF	.858	.923	.250	.938	.250	.000	.250	.500	.500	.931	.771	.947	.375	.000	.917	.858	.990

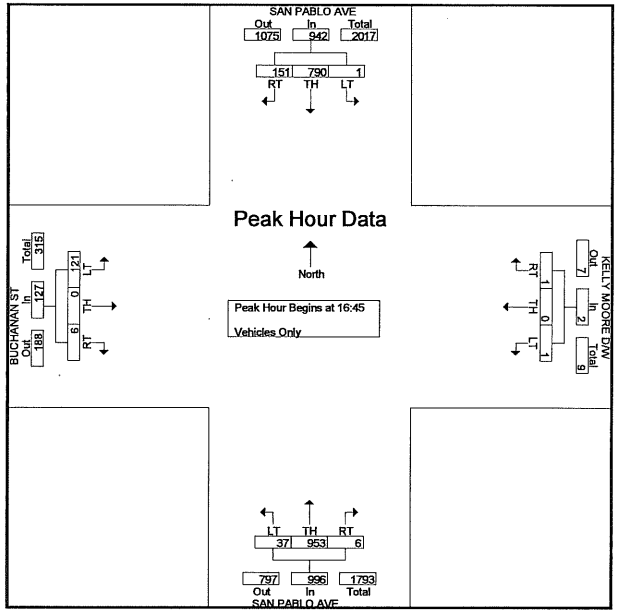

Intersection Turning Movement

Prepared by:

National Data & Surveying Services

N-S STREET: San Pablo Ave DATE: 1/16/2008 LOCATION: City of Albany

E-W STREET: Marin Ave DAY: WEDNESDAY PROJECT# 07-7587-001

	NORTHBOUND			SOUTHBOUND			EASTBOUND			WESTBOUND			
	NL	NT	NR	SL	ST	SR	EL	ET	ER	WL	WT	WR	TOTAL
LANES:	1	2	0	1	2	0	1	2	0	1	1.5	.5	
1:00 PM													
1:15 PM													
1:30 PM													
1:45 PM													
2:00 PM													
2:15 PM													
2:30 PM													
2:45 PM													
3:00 PM													
3:15 PM													
3:30 PM													
3:45 PM													
4:00 PM	34	136	7	21	133	3	12	135	30	19	102	25	657
4:15 PM	41	199	16	25	159	1	7	140	63	25	140	31	847
4:30 PM	52	195	13	31	170	5	9	188	88	22	153	17	943
4:45 PM	70	175	17	51	190	3	8	174	90	32	143	17	970
5:00 PM	70	208	9	27	182	3	10	196	90	27	152	10	984
5:15 PM	68	154	18	38	172	1	7	201	78	21	156	14	928
5:30 PM	54	170	12	51	166	7	14	163	68	32	129	6	872
5:45 PM	57	206	14	52	179	2	5	140	65	18	112	17	867
6:00 PM													
6:15 PM													
6:30 PM													
6:45 PM													
TOTAL VOLUMES =	NL 446	NT 1443	NR 106	SL 296	ST 1351	SR 25	EL 72	ET 1337	ER 572	WL 196	WT 1087	WR 137	TOTAL 7068

PM Peak Hr Begins at: 430 PM

PEAK VOLUMES =	260	732	57	147	714	12	34	759	346	102	604	58	3825
PEAK HR. FACTOR:		0.914			0.894			0.962			0.995		0.972

CONTROL: Signalized

MARKS TRAFFIC DATA

CITY OF ALBANY

fp
Mietek 916-806-0250

File Name : masonic-marin-p
Site Code : 6
Start Date : 5/8/2008
Page No : 1

Groups Printed- Vehicles Only

	MASONIC AVE Southbound				MARIN AVE Westbound				MASONIC AVE Northbound				MARIN AVE Eastbound				
Start Time	RT	TH	LT	App. Total	RT	TH	LT	App. Total	RT	TH	LT	App. Total	RT	TH	LT	App. Total	Int. Total
16:00	20	22	16	58	22	160	3	185	4	38	14	56	12	158	12	182	481
16:15	18	29	17	64	19	160	2	181	5	45	9	59	8	147	8	163	467
16:30	6	21	11	38	15	177	1	193	0	27	15	42	3	187	5	195	468
16:45	5	31	13	49	19	199	2	220	2	43	9	54	8	156	5	169	492
Total	49	103	57	209	75	696	8	779	11	153	47	211	31	648	30	709	1908
17:00	13	32	18	63	19	172	0	191	4	37	13	54	9	167	10	186	494
17:15	9	19	18	46	24	201	0	225	2	47	10	59	7	187	7	201	531
17:30	17	27	21	65	19	189	2	210	4	49	15	68	9	179	4	192	535
17:45	7	27	24	58	18	178	3	199	2	44	19	65	1	176	4	181	503
Total	46	105	81	232	80	740	5	825	12	177	57	246	26	709	25	760	2063
Grand Total	95	208	138	441	155	1436	13	1604	23	330	104	457	57	1357	55	1469	3971
Apprch %	21.5	47.2	31.3		9.7	89.5	0.8		5	72.2	22.8		3.9	92.4	3.7		
Total %	2.4	5.2	3.5	11.1	3.9	36.2	0.3	40.4	0.6	8.3	2.6	11.5	1.4	34.2	1.4	37	

	MASONIC AVE Southbound				MARIN AVE Westbound				MASONIC AVE Northbound				MARIN AVE Eastbound				
Start Time	RT	TH	LT	App. Total	RT	TH	LT	App. Total	RT	TH	LT	App. Total	RT	TH	LT	App. Total	Int. Total
Peak Hour Analysis From 16:00 to 17:45 - Peak 1 of 1																	
Peak Hour for Entire Intersection Begins at 17:00																	
17:00	13	32	18	63	19	172	0	191	4	37	13	54	9	167	10	186	494
17:15	9	19	18	46	24	201	0	225	2	47	10	59	7	187	7	201	531
17:30	17	27	21	65	19	189	2	210	4	49	15	68	9	179	4	192	535
17:45	7	27	24	58	18	178	3	199	2	44	19	65	1	176	4	181	503
Total Volume	46	105	81	232	80	740	5	825	12	177	57	246	26	709	25	760	2063
% App. Total	19.8	45.3	34.9		9.7	89.7	0.6		4.9	72	23.2		3.4	93.3	3.3		
PHF	.676	.820	.844	.892	.833	.920	.417	.917	.750	.903	.750	.904	.722	.948	.625	.945	.964

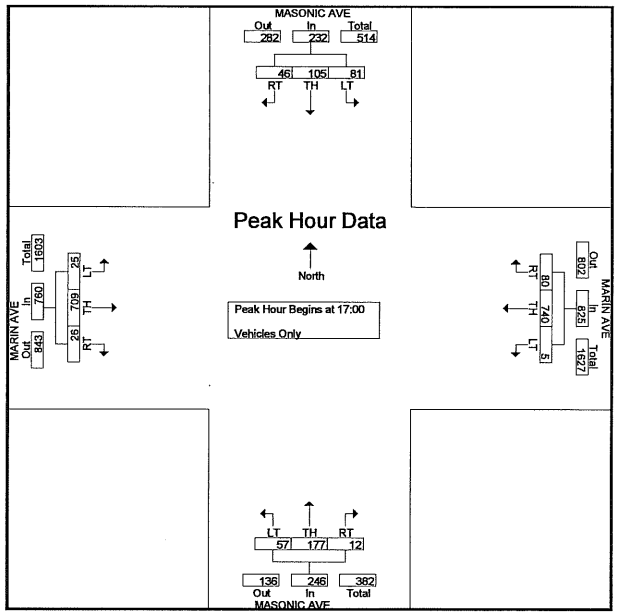

MARKS TRAFFIC DATA

CITY OF ALBANY

fp
Mietek 916-806-0250

File Name : jackson-monroe-p
Site Code : 7
Start Date : 5/6/2008
Page No : 1

Groups Printed- Vehicles Only

	JACKSON ST Southbound				MONROE ST Westbound				JACKSON ST Northbound				D/W Eastbound				
Start Time	RT	TH	LT	App. Total	RT	TH	LT	App. Total	RT	TH	LT	App. Total	RT	TH	LT	App. Total	Int. Total
16:00	0	16	5	21	13	0	6	19	10	39	0	49	0	0	0	0	89
16:15	0	24	9	33	8	0	14	22	10	32	0	42	0	0	0	0	97
16:30	0	14	9	23	10	1	19	30	20	42	0	62	1	1	0	2	117
16:45	0	18	10	28	10	0	7	17	11	26	0	37	0	0	1	1	83
Total	0	72	33	105	41	1	46	88	51	139	0	190	1	1	1	3	386
17:00	0	22	7	29	12	0	4	16	7	56	3	66	0	1	1	2	113
17:15	1	23	12	36	12	0	13	25	9	37	0	46	0	0	3	3	110
17:30	0	30	7	37	14	1	7	22	15	45	0	60	0	0	1	1	120
17:45	3	20	10	33	18	1	11	30	8	38	0	46	0	1	2	3	112
Total	4	95	36	135	56	2	35	93	39	176	3	218	0	2	7	9	455
Grand Total	4	167	69	240	97	3	81	181	90	315	3	408	1	3	8	12	841
Apprch %	1.7	69.6	28.8		53.6	1.7	44.8		22.1	77.2	0.7		8.3	25	66.7		
Total %	0.5	19.9	8.2	28.5	11.5	0.4	9.6	21.5	10.7	37.5	0.4	48.5	0.1	0.4	1	1.4	

	JACKSON ST Southbound				MONROE ST Westbound				JACKSON ST Northbound				D/W Eastbound				
Start Time	RT	TH	LT	App. Total	RT	TH	LT	App. Total	RT	TH	LT	App. Total	RT	TH	LT	App. Total	Int. Total
Peak Hour Analysis From 16:00 to 17:45 - Peak 1 of 1																	
Peak Hour for Entire Intersection Begins at 17:00																	
17:00	0	22	7	29	12	0	4	16	7	56	3	66	0	1	1	2	113
17:15	1	23	12	36	12	0	13	25	9	37	0	46	0	0	3	3	110
17:30	0	30	7	37	14	1	7	22	15	45	0	60	0	0	1	1	120
17:45	3	20	10	33	18	1	11	30	8	38	0	46	0	1	2	3	112
Total Volume	4	95	36	135	56	2	35	93	39	176	3	218	0	2	7	9	455
% App. Total	3	70.4	26.7		60.2	2.2	37.6		17.9	80.7	1.4		0	22.2	77.8		
PHF	.333	.792	.750	.912	.778	.500	.673	.775	.650	.786	.250	.826	.000	.500	.583	.750	.948

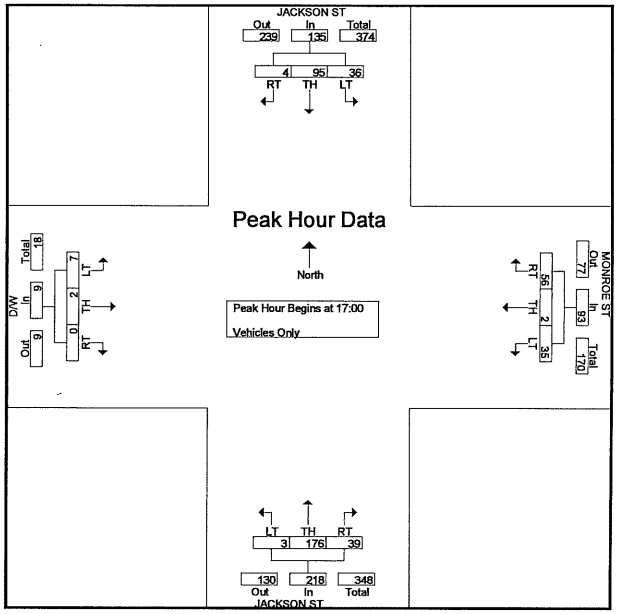

MARKS TRAFFIC DATA

CITY OF ALBANY

fp
Mietek 916-806-0250

File Name : pablo-monroe-p
Site Code : 8
Start Date : 5/6/2008
Page No : 1

Groups Printed- Vehicles Only

	SAN PABLO AV Southbound				D/W Westbound				SAN PABLO AV Northbound				MONROE ST Eastbound				
Start Time	RT	TH	LT	App. Total	RT	TH	LT	App. Total	RT	TH	LT	App. Total	RT	TH	LT	App. Total	Int. Total
16:00	7	203	0	210	0	0	0	0	1	229	15	245	8	0	6	14	469
16:15	18	189	0	207	2	0	0	2	0	233	9	242	12	1	2	15	466
16:30	24	193	0	217	3	0	0	3	4	245	12	261	9	0	11	20	501
16:45	9	189	0	198	4	0	0	4	0	239	7	246	13	0	7	20	468
Total	58	774	0	832	9	0	0	9	5	946	43	994	42	1	26	69	1904
17:00	22	201	0	223	0	0	0	0	2	256	12	270	6	0	7	13	506
17:15	14	156	0	170	1	0	0	1	0	282	16	298	8	0	5	13	482
17:30	16	198	0	214	0	0	0	0	0	268	15	283	10	0	14	24	521
17:45	21	202	0	223	2	0	0	2	2	240	12	254	10	0	7	17	496
Total	73	757	0	830	3	0	0	3	4	1046	55	1105	34	0	33	67	2005
Grand Total	131	1531	0	1662	12	0	0	12	9	1992	98	2099	76	1	59	136	3909
Apprch %	7.9	92.1	0		100	0	0		0.4	94.9	4.7		55.9	0.7	43.4		
Total %	3.4	39.2	0	42.5	0.3	0	0	0.3	0.2	51	2.5	53.7	1.9	0	1.5	3.5	

	SAN PABLO AV Southbound				D/W Westbound				SAN PABLO AV Northbound				MONROE ST Eastbound				
Start Time	RT	TH	LT	App. Total	RT	TH	LT	App. Total	RT	TH	LT	App. Total	RT	TH	LT	App. Total	Int. Total
Peak Hour Analysis From 16:00 to 17:45 - Peak 1 of 1																	
Peak Hour for Entire Intersection Begins at 17:00																	
17:00	22	201	0	223	0	0	0	0	2	256	12	270	6	0	7	13	506
17:15	14	156	0	170	1	0	0	1	0	282	16	298	8	0	5	13	482
17:30	16	198	0	214	0	0	0	0	0	268	15	283	10	0	14	24	521
17:45	21	202	0	223	2	0	0	2	2	240	12	254	10	0	7	17	496
Total Volume	73	757	0	830	3	0	0	3	4	1046	55	1105	34	0	33	67	2005
% App. Total	8.8	91.2	0		100	0	0		0.4	94.7	5		50.7	0	49.3		
PHF	.830	.937	.000	.930	.375	.000	.000	.375	.500	.927	.859	.927	.850	.000	.589	.698	.962

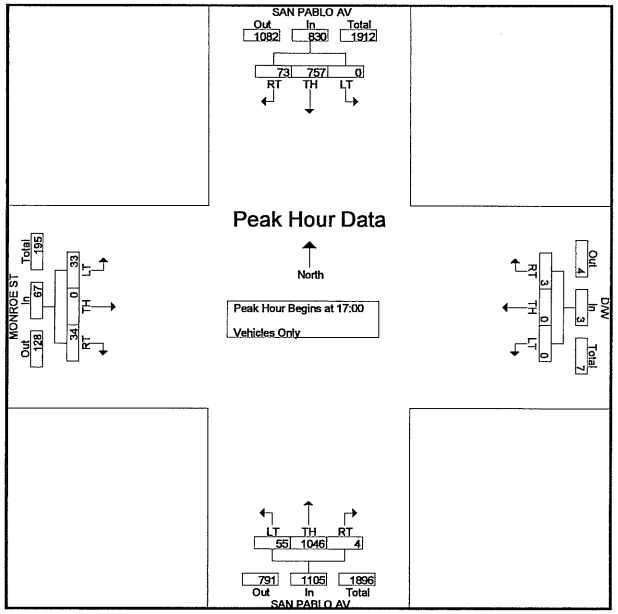

MARKS TRAFFIC DATA

CITY OF ALBANY

fp
Mietek 916-806-0250

File Name : pablo-dartmouth-p
Site Code : 9
Start Date : 5/6/2008
Page No : 1

Groups Printed- Vehicles Only

	SAN PABLO AVE Southbound				DARTMOUTH ST Westbound				SAN PABLO AVE Northbound				0 Eastbound				
Start Time	RT	TH	LT	App. Total	RT	TH	LT	App. Total	RT	TH	LT	App. Total	RT	TH	LT	App. Total	Int. Total
16:00	0	207	12	219	17	0	12	29	7	223	0	230	0	0	0	0	478
16:15	0	193	10	203	11	0	1	12	5	234	0	239	0	0	0	0	454
16:30	0	198	11	209	13	0	7	20	5	245	0	250	0	0	0	0	479
16:45	0	195	9	204	11	0	6	17	2	236	0	238	0	0	0	0	459
Total	0	793	42	835	52	0	26	78	19	938	0	957	0	0	0	0	1870
17:00	0	200	7	207	13	0	7	20	8	253	0	261	0	0	0	0	488
17:15	0	162	7	169	20	0	3	23	3	281	0	284	0	0	0	0	476
17:30	0	205	5	210	22	0	2	24	6	258	0	264	0	0	0	0	498
17:45	0	202	12	214	17	0	6	23	7	248	0	255	0	0	0	0	492
Total	0	769	31	800	72	0	18	90	24	1040	0	1064	0	0	0	0	1954
Grand Total	0	1562	73	1635	124	0	44	168	43	1978	0	2021	0	0	0	0	3824
Apprch %	0	95.5	4.5		73.8	0	26.2		2.1	97.9	0		0	0	0		
Total %	0	40.8	1.9	42.8	3.2	0	1.2	4.4	1.1	51.7	0	52.9	0	0	0	0	

	SAN PABLO AVE Southbound				DARTMOUTH ST Westbound				SAN PABLO AVE Northbound				0 Eastbound				
Start Time	RT	TH	LT	App. Total	RT	TH	LT	App. Total	RT	TH	LT	App. Total	RT	TH	LT	App. Total	Int. Total
Peak Hour Analysis From 16:00 to 17:45 - Peak 1 of 1																	
Peak Hour for Entire Intersection Begins at 17:00																	
17:00	0	200	7	207	13	0	7	20	8	253	0	261	0	0	0	0	488
17:15	0	162	7	169	20	0	3	23	3	281	0	284	0	0	0	0	476
17:30	0	205	5	210	22	0	2	24	6	258	0	264	0	0	0	0	498
17:45	0	202	12	214	17	0	6	23	7	248	0	255	0	0	0	0	492
Total Volume	0	769	31	800	72	0	18	90	24	1040	0	1064	0	0	0	0	1954
% App. Total	0	96.1	3.9		80	0	20		2.3	97.7	0		0	0	0		
PHF	.000	.938	.646	.935	.818	.000	.643	.938	.750	.925	.000	.937	.000	.000	.000	.000	.981

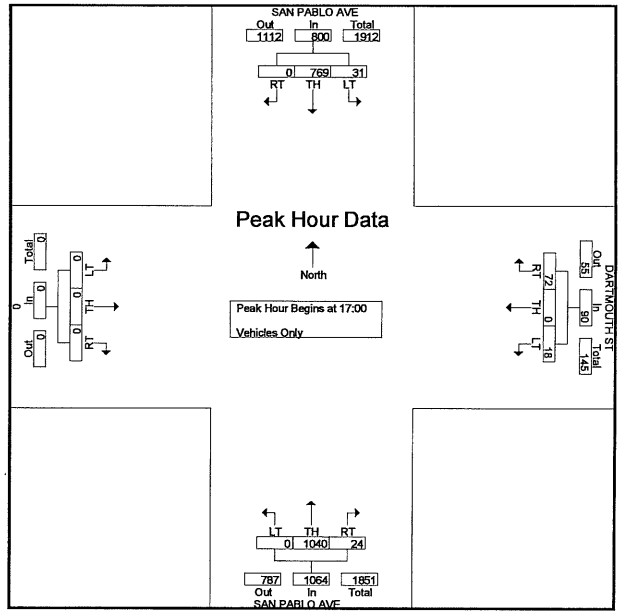

MARKS TRAFFIC DATA

CITY OF ALBANY

fp
Mietek 916-806-0250

File Name : pablo-harrison-p
Site Code : 10
Start Date : 5/8/2008
Page No : 1

Groups Printed- Vehicles Only

	SAN PABLO AVE Southbound				HARRISON ST Westbound				SAN PABLO AVE Northbound				HARRISON ST Eastbound				
Start Time	RT	TH	LT	App. Total	RT	TH	LT	App. Total	RT	TH	LT	App. Total	RT	TH	LT	App. Total	Int. Total
16:00	17	214	0	231	5	0	1	6	2	229	21	252	12	0	7	19	508
16:15	16	200	1	217	2	0	0	2	2	232	9	243	9	1	6	16	478
16:30	18	219	0	237	1	2	0	3	2	238	12	252	8	1	11	20	512
16:45	11	226	1	238	3	1	1	5	1	249	12	262	11	0	6	17	522
Total	62	859	2	923	11	3	2	16	7	948	54	1009	40	2	30	72	2020
17:00	13	216	1	230	6	1	3	10	6	279	11	296	13	0	17	30	566
17:15	18	209	0	227	3	1	0	4	2	287	16	305	17	0	14	31	567
17:30	24	212	1	237	4	1	1	6	0	284	10	294	22	1	21	44	581
17:45	7	202	2	211	2	0	0	2	0	274	15	289	16	1	13	30	532
Total	62	839	4	905	15	3	4	22	8	1124	52	1184	68	2	65	135	2246
Grand Total	124	1698	6	1828	26	6	6	38	15	2072	106	2193	108	4	95	207	4266
Apprch %	6.8	92.9	0.3		68.4	15.8	15.8		0.7	94.5	4.8		52.2	1.9	45.9		
Total %	2.9	39.8	0.1	42.9	0.6	0.1	0.1	0.9	0.4	48.6	2.5	51.4	2.5	0.1	2.2	4.9	

	SAN PABLO AVE Southbound				HARRISON ST Westbound				SAN PABLO AVE Northbound				HARRISON ST Eastbound				
Start Time	RT	TH	LT	App. Total	RT	TH	LT	App. Total	RT	TH	LT	App. Total	RT	TH	LT	App. Total	Int. Total
Peak Hour Analysis From 16:00 to 17:45 - Peak 1 of 1																	
Peak Hour for Entire Intersection Begins at 17:00																	
17:00	13	216	1	230	6	1	3	10	6	279	11	296	13	0	17	30	566
17:15	18	209	0	227	3	1	0	4	2	287	16	305	17	0	14	31	567
17:30	24	212	1	237	4	1	1	6	0	284	10	294	22	1	21	44	581
17:45	7	202	2	211	2	0	0	2	0	274	15	289	16	1	13	30	532
Total Volume	62	839	4	905	15	3	4	22	8	1124	52	1184	68	2	65	135	2246
% App. Total	6.9	92.7	0.4		68.2	13.6	18.2		0.7	94.9	4.4		50.4	1.5	48.1		
PHF	.646	.971	.500	.955	.625	.750	.333	.550	.333	.979	.813	.970	.773	.500	.774	.767	.966

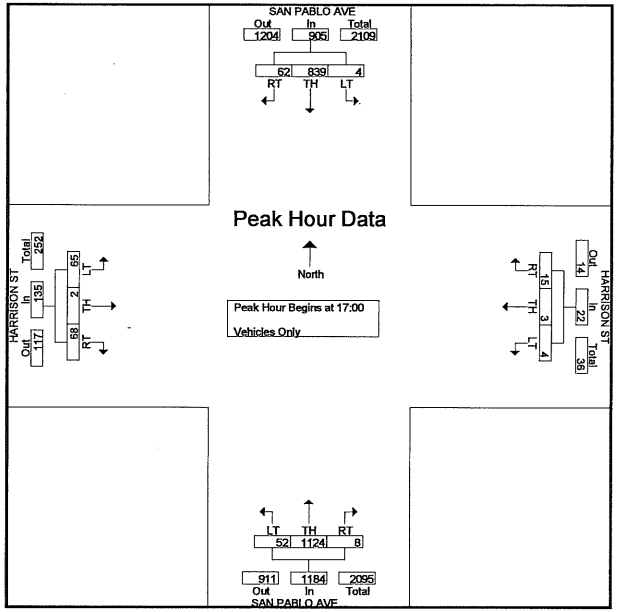

MARKS TRAFFIC DATA

CITY OF BERKELEY

fp
Mietek 916-806-0250

File Name : 80wb-gilman-p
Site Code : 11
Start Date : 5/6/2008
Page No : 1

Groups Printed- Vehicles Only

	I-580 EB OFF-RAMP Southbound					GILMAN RD Westbound					I-580 EB ON-RAMP Northbound				W. FRONTAGE RD Northeastbound					GILMAN RD Eastbound					
Start Time	RT	to Front.	TH	LT	App. Total	RT	TH	to Front.	LT	App. Total	RT	TH	LT	App. Total	to Pwy.	RT	TH	LT	App. Total	to Front.	RT	TH	LT	App. Total	Int. Total
16:00	4	30	0	94	128	0	6	33	100	139	0	0	0	0	0	80	0	3	83	2	6	16	0	24	374
16:15	1	41	2	81	125	0	2	17	90	109	0	0	0	0	0	97	0	1	98	5	4	12	0	21	353
16:30	4	38	1	91	134	0	4	19	76	99	0	0	0	0	0	58	0	2	60	4	1	6	0	11	304
16:45	4	34	0	86	124	0	2	15	67	84	0	0	0	0	0	40	0	1	41	1	4	12	0	17	266
Total	13	143	3	352	511	0	14	84	333	431	0	0	0	0	0	275	0	7	282	12	15	46	0	73	1297
17:00	5	30	0	87	122	0	2	25	83	110	0	0	0	0	0	45	0	2	47	1	2	4	0	7	286
17:15	4	51	1	104	160	0	3	27	79	109	0	0	0	0	0	62	0	3	65	2	4	11	0	17	351
17:30	3	34	1	102	140	0	6	18	56	80	0	0	0	0	0	70	0	2	72	3	4	1	0	8	300
17:45	4	20	2	105	131	0	7	7	61	75	0	0	0	0	0	69	0	0	69	0	0	7	0	7	282
Total	16	135	4	398	553	0	18	77	279	374	0	0	0	0	0	246	0	7	253	6	10	23	0	39	1219
Grand Total	29	278	7	750	1064	0	32	161	612	805	0	0	0	0	0	521	0	14	535	18	25	69	0	112	2516
Apprch %	2.7	26.1	0.7	70.5		0	4	20	76		0	0	0		0	97.4	0	2.6		16.1	22.3	61.6	0		
Total %	1.2	11	0.3	29.8	42.3	0	1.3	6.4	24.3	32	0	0	0	0	0	20.7	0	0.6	21.3	0.7	1	2.7	0	4.5	

	I-580 EB OFF-RAMP Southbound					GILMAN RD Westbound					I-580 EB ON-RAMP Northbound				W. FRONTAGE RD Northeastbound					GILMAN RD Eastbound					
Start Time	RT	to Front.	TH	LT	App. Total	RT	TH	to Front.	LT	App. Total	RT	TH	LT	App. Total	to Pwy.	RT	TH	LT	App. Total	to Front.	RT	TH	LT	App. Total	Int. Total
Peak Hour Analysis From 16:00 to 17:45 - Peak 1 of 1																									
Peak Hour for Entire Intersection Begins at 16:00																									
16:00	4	30	0	94	128	0	6	33	100	139	0	0	0	0	0	80	0	3	83	2	6	16	0	24	374
16:15	1	41	2	81	125	0	2	17	90	109	0	0	0	0	0	97	0	1	98	5	4	12	0	21	353
16:30	4	38	1	91	134	0	4	19	76	99	0	0	0	0	0	58	0	2	60	4	1	6	0	11	304
16:45	4	34	0	86	124	0	2	15	67	84	0	0	0	0	0	40	0	1	41	1	4	12	0	17	266
Total Volume	13	143	3	352	511	0	14	84	333	431	0	0	0	0	0	275	0	7	282	12	15	46	0	73	1297
% App. Total																									
PHF	.813	.872	.375	.936	.953	.000	.583	.636	.833	.775	.000	.000	.000	.000	.000	.709	.000	.583	.719	.600	.625	.719	.000	.760	.867

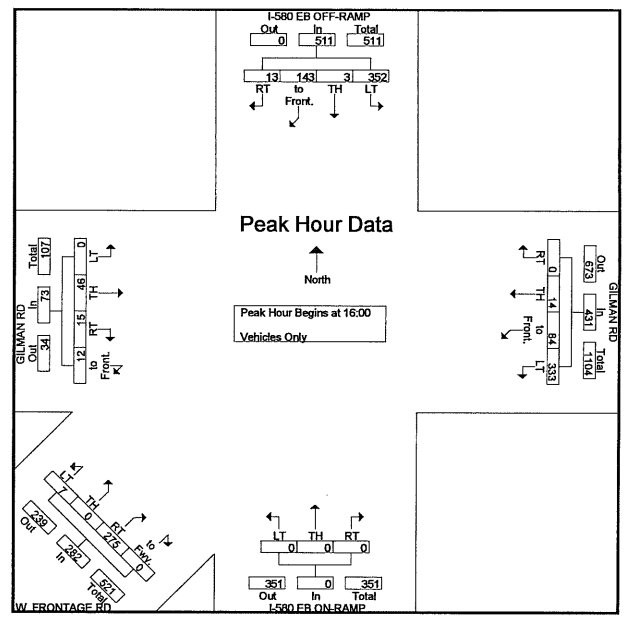

MARKS TRAFFIC DATA

CITY OF BERKELEY

fp
Mietek 916-806-0250

File Name : 80eb-gilman-p
Site Code : 12
Start Date : 5/6/2008
Page No : 1

Groups Printed- Vehicles Only

	I-80 EB ON-RAMP Southbound				GILMAN ST Westbound				I-80 EB OFF-RAMP Northbound				GILMAN ST Eastbound				
Start Time	RT	TH	LT	App. Total	RT	TH	LT	App. Total	RT	TH	LT	App. Total	RT	TH	LT	App. Total	Int. Total
16:00	0	0	0	0	204	130	0	334	49	1	5	55	0	100	84	184	573
16:15	0	0	0	0	141	102	0	243	56	0	5	61	0	107	89	196	500
16:30	0	0	0	0	168	96	0	264	39	1	5	45	0	104	51	155	464
16:45	0	0	0	0	152	83	0	235	49	1	2	52	0	98	39	137	424
Total	0	0	0	0	665	411	0	1076	193	3	17	213	0	409	263	672	1961
17:00	0	0	0	0	207	111	0	318	50	0	2	52	0	89	45	134	504
17:15	0	0	0	0	219	106	0	325	43	1	3	47	0	121	59	180	552
17:30	0	0	0	0	195	75	0	270	42	1	2	45	0	109	62	171	486
17:45	0	0	0	0	154	68	0	222	49	1	7	57	0	114	65	179	458
Total	0	0	0	0	775	360	0	1135	184	3	14	201	0	433	231	664	2000
Grand Total	0	0	0	0	1440	771	0	2211	377	6	31	414	0	842	494	1336	3961
Apprch %	0	0	0		65.1	34.9	0		91.1	1.4	7.5		0	63	37		
Total %	0	0	0	0	36.4	19.5	0	55.8	9.5	0.2	0.8	10.5	0	21.3	12.5	33.7	

	I-80 EB ON-RAMP Southbound				GILMAN ST Westbound				I-80 EB OFF-RAMP Northbound				GILMAN ST Eastbound				
Start Time	RT	TH	LT	App. Total	RT	TH	LT	App. Total	RT	TH	LT	App. Total	RT	TH	LT	App. Total	Int. Total
Peak Hour Analysis From 16:00 to 17:45 - Peak 1 of 1																	
Peak Hour for Entire Intersection Begins at 17:00																	
17:00	0	0	0	0	207	111	0	318	50	0	2	52	0	89	45	134	504
17:15	0	0	0	0	219	106	0	325	43	1	3	47	0	121	59	180	552
17:30	0	0	0	0	195	75	0	270	42	1	2	45	0	109	62	171	486
17:45	0	0	0	0	154	68	0	222	49	1	7	57	0	114	65	179	458
Total Volume	0	0	0	0	775	360	0	1135	184	3	14	201	0	433	231	664	2000
% App. Total	0	0	0		68.3	31.7	0		91.5	1.5	7		0	65.2	34.8		
PHF	.000	.000	.000	.000	.885	.811	.000	.873	.920	.750	.500	.882	.000	.895	.888	.922	.906

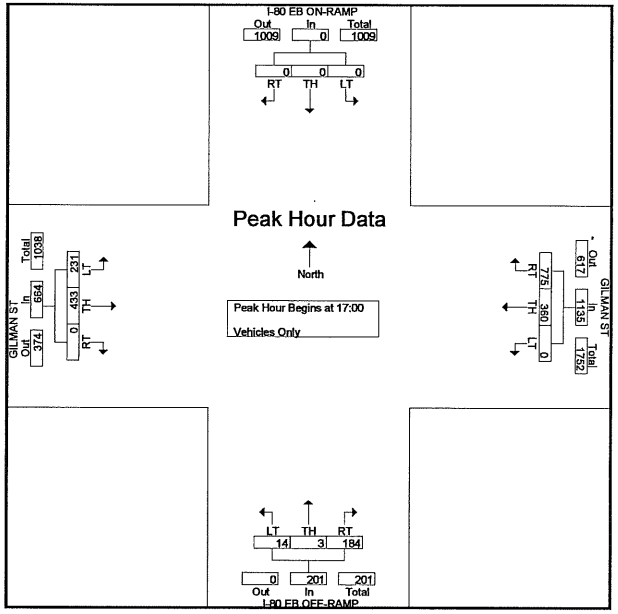

MARKS TRAFFIC DATA

CITY OF BERKELEY

fp
Mietek 916-806-0250

File Name : eastshore-gilman-p
Site Code : 13
Start Date : 5/6/2008
Page No : 1

Groups Printed- Vehicles Only

	EASTSHORE HWY Southbound				GILMAN ST Westbound				EASTSHORE HWY Northbound				GILMAN ST Eastbound				
Start Time	RT	TH	LT	App. Total	RT	TH	LT	App. Total	RT	TH	LT	App. Total	RT	TH	LT	App. Total	Int. Total
16:00	44	10	11	65	13	270	2	285	10	4	21	35	21	120	9	150	535
16:15	22	4	9	35	13	192	4	209	7	5	27	39	26	119	17	162	445
16:30	28	3	13	44	16	201	3	220	10	9	33	52	29	102	12	143	459
16:45	23	7	6	36	14	182	1	197	7	7	30	44	22	108	16	146	423
Total	117	24	39	180	56	845	10	911	34	25	111	170	98	449	54	601	1862
17:00	21	9	7	37	16	244	0	260	4	4	39	47	19	107	14	140	484
17:15	31	5	2	38	13	265	0	278	9	4	25	38	22	130	10	162	516
17:30	20	1	6	27	16	227	1	244	10	3	23	36	27	137	7	171	478
17:45	15	4	12	31	13	174	2	189	3	6	30	39	25	126	18	169	428
Total	87	19	27	133	58	910	3	971	26	17	117	160	93	500	49	642	1906
Grand Total	204	43	66	313	114	1755	13	1882	60	42	228	330	191	949	103	1243	3768
Apprch %	65.2	13.7	21.1		6.1	93.3	0.7		18.2	12.7	69.1		15.4	76.3	8.3		
Total %	5.4	1.1	1.8	8.3	3	46.6	0.3	49.9	1.6	1.1	6.1	8.8	5.1	25.2	2.7	33	

	EASTSHORE HWY Southbound				GILMAN ST Westbound				EASTSHORE HWY Northbound				GILMAN ST Eastbound				
Start Time	RT	TH	LT	App. Total	RT	TH	LT	App. Total	RT	TH	LT	App. Total	RT	TH	LT	App. Total	Int. Total
Peak Hour Analysis From 16:00 to 17:45 - Peak 1 of 1																	
Peak Hour for Entire Intersection Begins at 17:00																	
17:00	21	9	7	37	16	244	0	260	4	4	39	47	19	107	14	140	484
17:15	31	5	2	38	13	265	0	278	9	4	25	38	22	130	10	162	516
17:30	20	1	6	27	16	227	1	244	10	3	23	36	27	137	7	171	478
17:45	15	4	12	31	13	174	2	189	3	6	30	39	25	126	18	169	428
Total Volume	87	19	27	133	58	910	3	971	26	17	117	160	93	500	49	642	1906
% App. Total	65.4	14.3	20.3		6	93.7	0.3		16.2	10.6	73.1		14.5	77.9	7.6		
PHF	.702	.528	.563	.875	.906	.858	.375	.873	.650	.708	.750	.851	.861	.912	.681	.939	.923

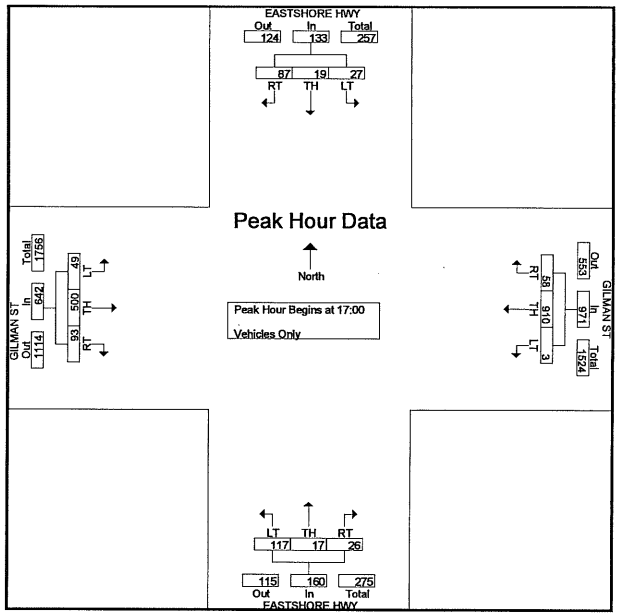

MARKS TRAFFIC DATA

CITY OF BERKELEY

fp
Mietek 916-806-0250

File Name : 6-gilman-p
Site Code : 14
Start Date : 5/6/2008
Page No : 1

Groups Printed- Vehicles Only

	6th ST Southbound				GILMAN ST Westbound				6th ST Northbound				GILMAN ST Eastbound				
Start Time	RT	TH	LT	App. Total	RT	TH	LT	App. Total	RT	TH	LT	App. Total	RT	TH	LT	App. Total	Int. Total
16:00	28	18	5	51	5	152	12	169	20	16	57	93	10	116	4	130	443
16:15	7	15	4	26	0	127	14	141	27	11	45	83	14	108	5	127	377
16:30	8	12	3	23	3	129	13	145	21	16	60	97	16	81	11	108	373
16:45	14	9	4	27	1	126	9	136	31	13	60	104	14	86	7	107	374
Total	57	54	16	127	9	534	48	591	99	56	222	377	54	391	27	472	1567
17:00	17	9	6	32	3	164	9	176	31	20	63	114	28	91	4	123	445
17:15	10	11	5	26	12	149	3	164	31	18	96	145	5	113	3	121	456
17:30	5	17	11	33	5	137	10	152	29	23	69	121	13	117	1	131	437
17:45	6	11	1	18	1	115	10	126	35	15	43	93	14	116	2	132	369
Total	38	48	23	109	21	565	32	618	126	76	271	473	60	437	10	507	1707
Grand Total	95	102	39	236	30	1099	80	1209	225	132	493	850	114	828	37	979	3274
Apprch %	40.3	43.2	16.5		2.5	90.9	6.6		26.5	15.5	58		11.6	84.6	3.8		
Total %	2.9	3.1	1.2	7.2	0.9	33.6	2.4	36.9	6.9	4	15.1	26	3.5	25.3	1.1	29.9	

	6th ST Southbound				GILMAN ST Westbound				6th ST Northbound				GILMAN ST Eastbound				
Start Time	RT	TH	LT	App. Total	RT	TH	LT	App. Total	RT	TH	LT	App. Total	RT	TH	LT	App. Total	Int. Total
Peak Hour Analysis From 16:00 to 17:45 - Peak 1 of 1																	
Peak Hour for Entire Intersection Begins at 16:45																	
16:45	14	9	4	27	1	126	9	136	31	13	60	104	14	86	7	107	374
17:00	17	9	6	32	3	164	9	176	31	20	63	114	28	91	4	123	445
17:15	10	11	5	26	12	149	3	164	31	18	96	145	5	113	3	121	456
17:30	5	17	11	33	5	137	10	152	29	23	69	121	13	117	1	131	437
Total Volume	46	46	26	118	21	576	31	628	122	74	288	484	60	407	15	482	1712
% App. Total	39	39	22		3.3	91.7	4.9		25.2	15.3	59.5		12.4	84.4	3.1		
PHF	.676	.676	.591	.894	.438	.878	.775	.892	.984	.804	.750	.834	.536	.870	.536	.920	.939

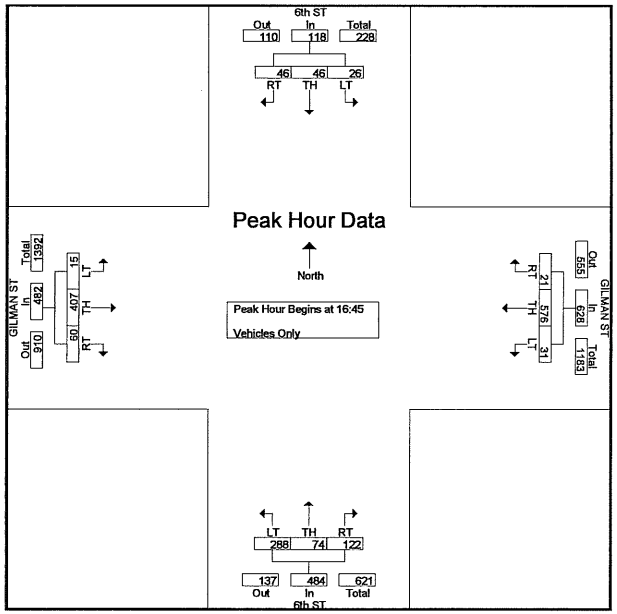

MARKS TRAFFIC DATA

CITY OF BERKELEY

fp
Mietek 916-806-0250

File Name : 8-gilman-p
Site Code : 15
Start Date : 5/6/2008
Page No : 1

Groups Printed- Vehicles Only

	8th ST Southbound				GILMAN ST Westbound				8th ST Northbound				GILMAN ST Eastbound				
Start Time	RT	TH	LT	App. Total	RT	TH	LT	App. Total	RT	TH	LT	App. Total	RT	TH	LT	App. Total	Int. Total
16:00	10	7	10	27	5	117	3	125	5	5	7	17	4	127	6	137	306
16:15	8	7	11	26	9	113	1	123	0	6	2	8	3	111	5	119	276
16:30	10	3	15	28	4	112	0	116	6	9	6	21	1	112	6	119	284
16:45	8	5	10	23	4	120	1	125	4	2	7	13	0	118	5	123	284
Total	36	22	46	104	22	462	5	489	15	22	22	59	8	468	22	498	1150
17:00	18	6	4	28	5	136	3	144	4	8	6	18	2	121	9	132	322
17:15	17	4	15	36	14	123	2	139	4	11	2	17	3	134	6	143	335
17:30	8	5	11	24	21	124	4	149	4	9	10	23	3	149	10	162	358
17:45	6	4	9	19	21	125	2	148	4	9	4	17	0	141	9	150	334
Total	49	19	39	107	61	508	11	580	16	37	22	75	8	545	34	587	1349
Grand Total	85	41	85	211	83	970	16	1069	31	59	44	134	16	1013	56	1085	2499
Apprch %	40.3	19.4	40.3		7.8	90.7	1.5		23.1	44	32.8		1.5	93.4	5.2		
Total %	3.4	1.6	3.4	8.4	3.3	38.8	0.6	42.8	1.2	2.4	1.8	5.4	0.6	40.5	2.2	43.4	

	8th ST Southbound				GILMAN ST Westbound				8th ST Northbound				GILMAN ST Eastbound				
Start Time	RT	TH	LT	App. Total	RT	TH	LT	App. Total	RT	TH	LT	App. Total	RT	TH	LT	App. Total	Int. Total
Peak Hour Analysis From 16:00 to 17:45 - Peak 1 of 1																	
Peak Hour for Entire Intersection Begins at 17:00																	
17:00	18	6	4	28	5	136	3	144	4	8	6	18	2	121	9	132	322
17:15	17	4	15	36	14	123	2	139	4	11	2	17	3	134	6	143	335
17:30	8	5	11	24	21	124	4	149	4	9	10	23	3	149	10	162	358
17:45	6	4	9	19	21	125	2	148	4	9	4	17	0	141	9	150	334
Total Volume	49	19	39	107	61	508	11	580	16	37	22	75	8	545	34	587	1349
% App. Total	45.8	17.8	36.4		10.5	87.6	1.9		21.3	49.3	29.3		1.4	92.8	5.8		
PHF	.681	.792	.650	.743	.726	.934	.688	.973	1.000	.841	.550	.815	.667	.914	.850	.906	.942

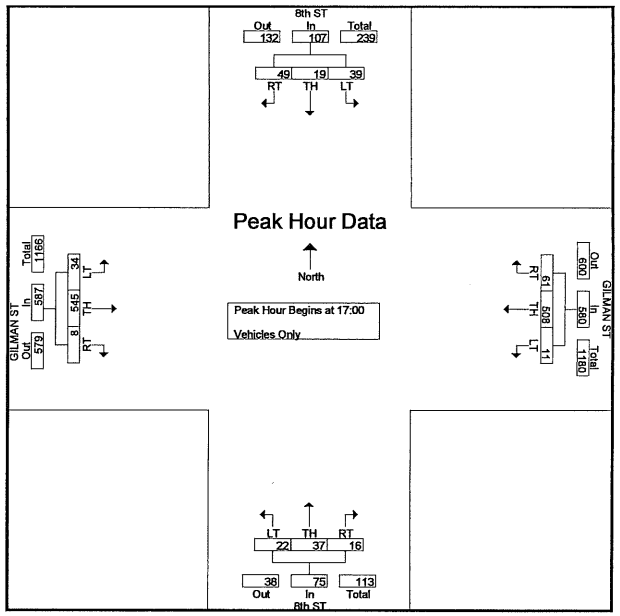

MARKS TRAFFIC DATA

CITY OF BERKELEY

fp
Mietek 916-806-0250

File Name : pablo-gilman-p
Site Code : 16
Start Date : 5/8/2008
Page No : 1

Groups Printed- Vehicles Only

	SAN PABLO AVE Southbound				GILMAN ST Westbound				SAN PABLO AVE Northbound				GILMAN ST Eastbound				
Start Time	RT	TH	LT	App. Total	RT	TH	LT	App. Total	RT	TH	LT	App. Total	RT	TH	LT	App. Total	Int. Total
16:00	46	146	32	224	19	70	14	103	18	173	40	231	42	127	40	209	767
16:15	35	151	42	228	7	57	7	71	14	205	28	247	36	118	48	202	748
16:30	44	147	44	235	10	63	12	85	17	229	47	293	38	121	35	194	807
16:45	28	182	46	256	13	63	9	85	14	208	48	270	42	138	39	219	830
Total	153	626	164	943	49	253	42	344	63	815	163	1041	158	504	162	824	3152
17:00	25	177	42	244	16	70	5	91	14	234	61	309	36	118	42	196	840
17:15	29	183	33	245	16	77	12	105	19	266	54	339	45	123	41	209	898
17:30	31	179	36	246	7	80	5	92	10	257	56	323	33	133	36	202	863
17:45	26	168	31	225	11	76	7	94	12	243	51	306	27	142	32	201	826
Total	111	707	142	960	50	303	29	382	55	1000	222	1277	141	516	151	808	3427
Grand Total	264	1333	306	1903	99	556	71	726	118	1815	385	2318	299	1020	313	1632	6579
Apprch %	13.9	70	16.1		13.6	76.6	9.8		5.1	78.3	16.6		18.3	62.5	19.2		
Total %	4	20.3	4.7	28.9	1.5	8.5	1.1	11	1.8	27.6	5.9	35.2	4.5	15.5	4.8	24.8	

	SAN PABLO AVE Southbound				GILMAN ST Westbound				SAN PABLO AVE Northbound				GILMAN ST Eastbound				
Start Time	RT	TH	LT	App. Total	RT	TH	LT	App. Total	RT	TH	LT	App. Total	RT	TH	LT	App. Total	Int. Total
Peak Hour Analysis From 16:00 to 17:45 - Peak 1 of 1																	
Peak Hour for Entire Intersection Begins at 16:45																	
16:45	28	182	46	256	13	63	9	85	14	208	48	270	42	138	39	219	830
17:00	25	177	42	244	16	70	5	91	14	234	61	309	36	118	42	196	840
17:15	29	183	33	245	16	77	12	105	19	266	54	339	45	123	41	209	898
17:30	31	179	36	246	7	80	5	92	10	257	56	323	33	133	36	202	863
Total Volume	113	721	157	991	52	290	31	373	57	965	219	1241	156	512	158	826	3431
% App. Total	11.4	72.8	15.8		13.9	77.7	8.3		4.6	77.8	17.6		18.9	62	19.1		
PHF	.911	.985	.853	.968	.813	.906	.646	.888	.750	.907	.898	.915	.867	.928	.940	.943	.955

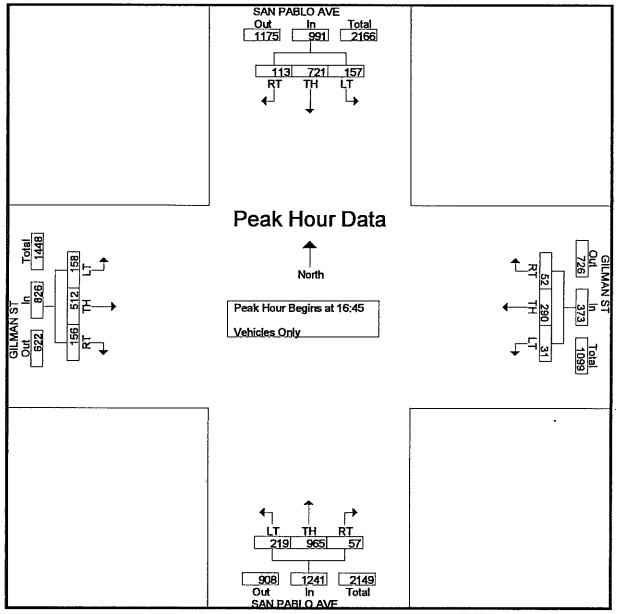

MARKS TRAFFIC DATA

CITY OF BERKELEY

fp
Mietek 916-806-0250

File Name : gilman-hopkins-p
Site Code : 17
Start Date : 5/8/2008
Page No : 1

Groups Printed- Vehicles Only

	GILMAN ST Southbound				HOPKINS ST Westbound				0 Northbound				HOPKINS ST Eastbound				
Start Time	RT	TH	LT	App. Total	RT	TH	LT	App. Total	RT	TH	LT	App. Total	RT	TH	LT	App. Total	Int. Total
16:00	5	0	76	81	140	37	0	177	0	0	0	0	0	38	2	40	298
16:15	1	0	87	88	125	27	0	152	0	0	0	0	0	29	0	29	269
16:30	2	0	98	100	114	29	0	143	0	0	0	0	0	27	1	28	271
16:45	3	0	88	91	140	20	0	160	0	0	0	0	0	34	0	34	285
Total	11	0	349	360	519	113	0	632	0	0	0	0	0	128	3	131	1123
17:00	0	0	75	75	137	24	0	161	0	0	0	0	0	38	3	41	277
17:15	4	0	73	77	160	33	0	193	0	0	0	0	0	46	5	51	321
17:30	0	0	98	98	156	25	0	181	0	0	0	0	0	35	4	39	318
17:45	2	0	86	88	152	27	0	179	0	0	0	0	0	33	4	37	304
Total	6	0	332	338	605	109	0	714	0	0	0	0	0	152	16	168	1220
Grand Total	17	0	681	698	1124	222	0	1346	0	0	0	0	0	280	19	299	2343
Apprch %	2.4	0	97.6		83.5	16.5	0		0	0	0		0	93.6	6.4		
Total %	0.7	0	29.1	29.8	48	9.5	0	57.4	0	0	0	0	0	12	0.8	12.8	

	GILMAN ST Southbound				HOPKINS ST Westbound				0 Northbound				HOPKINS ST Eastbound				
Start Time	RT	TH	LT	App. Total	RT	TH	LT	App. Total	RT	TH	LT	App. Total	RT	TH	LT	App. Total	Int. Total
Peak Hour Analysis From 16:00 to 17:45 - Peak 1 of 1																	
Peak Hour for Entire Intersection Begins at 17:00																	
17:00	0	0	75	75	137	24	0	161	0	0	0	0	0	38	3	41	277
17:15	4	0	73	77	160	33	0	193	0	0	0	0	0	46	5	51	321
17:30	0	0	98	98	156	25	0	181	0	0	0	0	0	35	4	39	318
17:45	2	0	86	88	152	27	0	179	0	0	0	0	0	33	4	37	304
Total Volume	6	0	332	338	605	109	0	714	0	0	0	0	0	152	16	168	1220
% App. Total	1.8	0	98.2		84.7	15.3	0		0	0	0		0	90.5	9.5		
PHF	.375	.000	.847	.862	.945	.826	.000	.925	.000	.000	.000	.000	.000	.826	.800	.824	.950

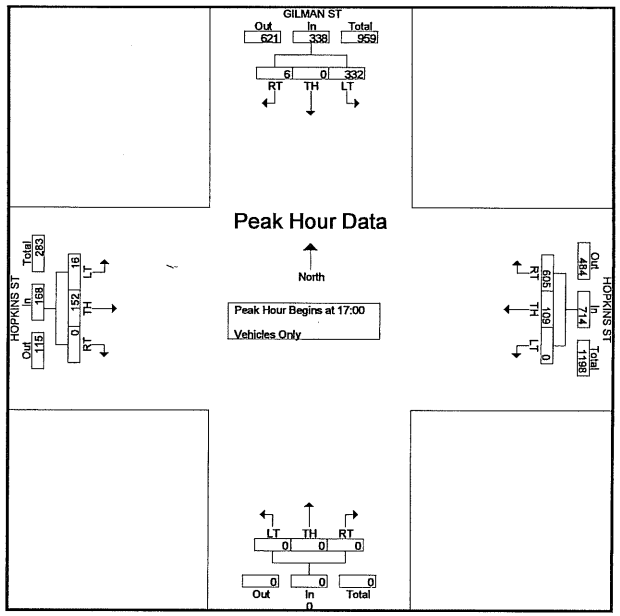

MARKS TRAFFIC DATA

CITY OF ALBANY

fp
Mietek 916-806-0250

File Name : pablo-solano-s
Site Code : 1
Start Date : 9/20/2008
Page No : 1

Groups Printed- Vehicles Only

	SAN PABLO AVE Southbound				SOLANO AVE Westbound				SAN PABLO AVE Northbound				SOLANO AVE Eastbound				
Start Time	RT	TH	LT	App. Total	RT	TH	LT	App. Total	RT	TH	LT	App. Total	RT	TH	LT	App. Total	Int. Total
11:30	18	165	31	214	36	47	29	112	44	215	5	264	14	44	29	87	677
11:45	19	179	30	228	43	58	33	134	48	201	6	255	18	45	34	97	714
Total	37	344	61	442	79	105	62	246	92	416	11	519	32	89	63	184	1391
12:00	22	174	27	223	33	36	30	99	53	217	7	277	16	50	32	98	697
12:15	28	197	35	260	36	44	39	119	52	207	6	265	14	49	39	102	746
12:30	33	220	39	292	31	45	48	124	49	197	10	256	13	42	32	87	759
12:45	48	190	37	275	39	40	37	116	30	176	1	207	14	47	28	89	687
Total	131	781	138	1050	139	165	154	458	184	797	24	1005	57	188	131	376	2889
13:00	28	174	34	236	40	23	37	100	38	187	4	229	16	59	40	115	680
13:15	32	215	40	287	43	37	49	129	47	205	8	260	12	33	20	65	741
13:30	31	197	41	269	28	31	42	101	50	228	3	281	20	36	22	78	729
13:45	27	192	24	243	56	36	37	129	40	185	5	230	17	47	34	98	700
Total	118	778	139	1035	167	127	165	459	175	805	20	1000	65	175	116	356	2850
14:00	29	200	43	272	33	36	37	106	37	215	3	255	15	36	30	81	714
14:15	21	206	45	272	37	42	48	127	42	171	7	220	20	39	30	89	708
Grand Total	336	2309	426	3071	455	475	466	1396	530	2404	65	2999	189	527	370	1086	8552
Apprch %	10.9	75.2	13.9		32.6	34	33.4		17.7	80.2	2.2		17.4	48.5	34.1		
Total %	3.9	27	5	35.9	5.3	5.6	5.4	16.3	6.2	28.1	0.8	35.1	2.2	6.2	4.3	12.7	

	SAN PABLO AVE Southbound				SOLANO AVE Westbound				SAN PABLO AVE Northbound				SOLANO AVE Eastbound				
Start Time	RT	TH	LT	App. Total	RT	TH	LT	App. Total	RT	TH	LT	App. Total	RT	TH	LT	App. Total	Int. Total
Peak Hour Analysis From 11:30 to 14:00 - Peak 1 of 1																	
Peak Hour for Entire Intersection Begins at 11:45																	
11:45	19	179	30	228	43	58	33	134	48	201	6	255	18	45	34	97	714
12:00	22	174	27	223	33	36	30	99	53	217	7	277	16	50	32	98	697
12:15	28	197	35	260	36	44	39	119	52	207	6	265	14	49	39	102	746
12:30	33	220	39	292	31	45	48	124	49	197	10	256	13	42	32	87	759
Total Volume	102	770	131	1003	143	183	150	476	202	822	29	1053	61	186	137	384	2916
% App. Total	10.2	76.8	13.1		30	38.4	31.5		19.2	78.1	2.8		15.9	48.4	35.7		
PHF	.773	.875	.840	.859	.831	.789	.781	.888	.953	.947	.725	.950	.847	.930	.878	.941	.960

MARKS TRAFFIC DATA

CITY OF ALBANY

fp
Mietek 916-806-0250

File Name : pablo-solano-s
Site Code : 1
Start Date : 9/20/2008
Page No : 2

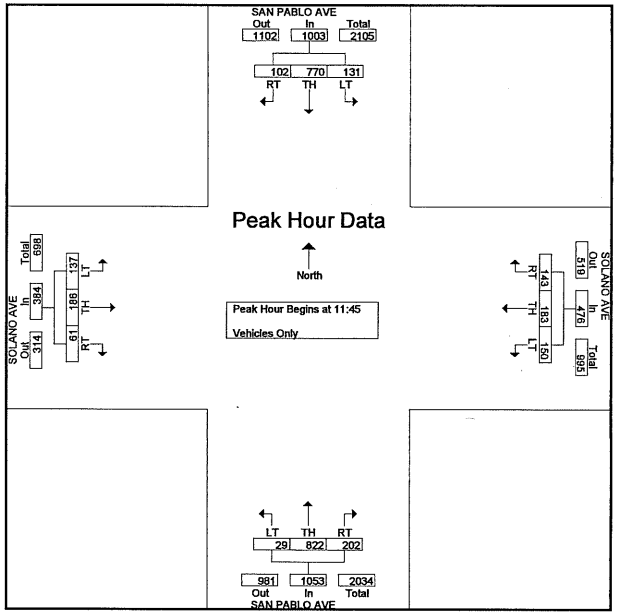

Midday Peak-Hour Volume Count Worksheet

Date: 9/20/08
Counter: Janea & Michael
Intersection Name: 580 WB & Buchanan
Weather: Clear
City: Berkeley

AUTO-CENSUS
Traffic Monitoring and Analysis
870 Castlewood Dr. #1
Los Gatos, CA 95032
Phone 408-826-9673 Fax 408-877-1625

	580 WB				Buchanan				580 WB				Buchanan				
	North Approach				East Approach				South Approach				West Approach				
Start Time	Right	Thru	Left	Total	Right	Thru	Left	Total	Right	Thru	Left	Total	Right	Thru	Left	Total	
11:30	0	0	0	0	0	0	0	0	0	0	0	0	0	0	0	0	597
11:45	0	0	0	0	123	166	0	289	155	1	61	217	0	81	10	91	653
12:00	0	0	0	0	262	356	0	618	322	2	119	443	0	167	22	189	482
12:15	0	0	0	0	381	548	0	929	409	3	146	558	0	220	25	245	654
12:30	0	0	0	0	538	753	0	1,291	555	4	198	757	0	301	37	338	623
12:45	0	0	0	0	694	955	0	1,649	675	9	251	935	0	375	50	425	601
1:00	0	0	0	0	835	1,148	0	1,983	806	10	301	1,117	0	451	59	510	501
1:15	0	0	0	0	969	1,279	0	2,248	925	10	346	1,281	0	513	69	582	583
1:30	0	0	0	0	1,121	1,452	0	2,573	1,052	12	383	1,447	0	586	88	674	576
1:45	0	0	0	0	1,285	1,599	0	2,884	1,203	14	412	1,629	0	657	100	757	542
2:00	0	0	0	0	1,426	1,762	0	3,188	1,328	15	446	1,789	0	720	115	835	568
2:15	0	0	0	0	1,585	1,917	0	3,502	1,458	15	486	1,959	0	795	124	919	498
2:30	0	0	0	0	1,711	2,061	0	3,772	1,573	17	505	2,095	0	880	131	1,011	

Peak Hour	Right	Thru	Left	Total	Right	Thru	Left	Total	Right	Thru	Left	Total	Right	Thru	Left	Total	PK Hour
11:30-12:30	0	0	0	0	538	753	0	1,291	555	4	198	757	0	301	37	338	2,386
11:45-12:45	0	0	0	0	571	789	0	1,360	520	8	190	718	0	294	40	334	2,412
12:00-1:00	0	0	0	0	573	792	0	1,365	484	8	182	674	0	284	37	321	2,360
12:15-1:15	0	0	0	0	588	731	0	1,319	516	7	200	723	0	293	44	337	2,379
12:30-1:30	0	0	0	0	583	699	0	1,282	497	8	185	690	0	285	51	336	2,308
12:45-1:45	0	0	0	0	591	644	0	1,235	528	5	161	694	0	282	50	332	2,261
1:00-2:00	0	0	0	0	591	614	0	1,205	522	5	145	672	0	269	56	325	2,202
1:15-2:15	0	0	0	0	616	638	0	1,254	533	5	140	678	0	282	55	337	2,269
1:30-2:30	0	0	0	0	590	609	0	1,199	521	5	122	648	0	294	43	337	2,184
Peak Volumes:	0	0	0	0	571	789	0	1,360	520	8	190	718	0	294	40	334	2,412

Cut and Paste	NBL	NBT	NBR	SBL	SBT	SBR	EBL	EBT	EBR	WBL	WBT	WBR
	190	8	520	0	0	0	40	294	0	0	789	571

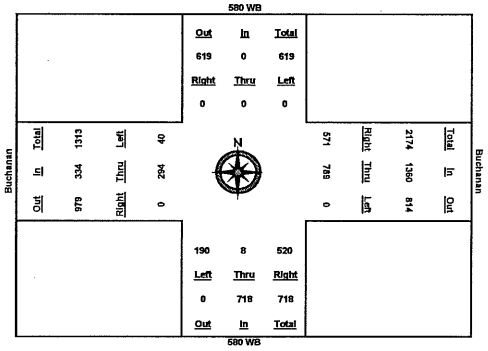

Midday Peak-Hour Volume Count Worksheet

Date: 10/20/08
Counter: Matt & Leonard
Intersection Name: 580EB & Buchanan
Weather: Clear
City: Oakland

AUTO-CENSUS
Traffic Monitoring and Analysis
870 Castlewood Dr. #1
Los Gatos, CA 95032
Phone 408-826-9673 Fax 408-877-1625

	580 EB				Buchanan				580 EB				Buchanan				
	North Approach				East Approach				South Approach				West Approach				
Start Time	Right	Thru	Left	Total	Right	Thru	Left	Total	Right	Thru	Left	Total	Right	Thru	Left	Total	
11:30	0	0	0	0	0	0	0	0	0	0	0	0	0	0	0	0	356
11:45	12	1	62	75	0	87	158	245	0	0	0	0	12	24	0	36	357
12:00	28	2	124	154	0	181	314	495	0	0	0	0	23	41	0	64	317
12:15	36	2	194	232	0	258	458	716	0	0	0	0	30	52	0	82	390
12:30	50	4	248	302	0	362	632	994	0	0	0	0	39	85	0	124	328
12:45	64	6	303	373	0	427	787	1,214	0	0	0	0	47	114	0	161	302
1:00	71	8	371	450	0	499	913	1,412	0	0	0	0	58	130	0	188	271
1:15	80	10	432	522	0	553	1,038	1,591	0	0	0	0	65	143	0	208	359
1:30	88	10	510	608	0	624	1,211	1,835	0	0	0	0	79	158	0	237	207
1:45	91	10	555	656	0	653	1,318	1,971	0	0	0	0	89	171	0	260	294
2:00	97	11	621	729	0	702	1,459	2,161	0	0	0	0	102	189	0	291	330
2:15	101	12	683	796	0	756	1,638	2,394	0	0	0	0	114	207	0	321	243
2:30	104	12	748	864	0	790	1,745	2,535	0	0	0	0	125	230	0	355	

Peak Hour	Right	Thru	Left	Total	Right	Thru	Left	Total	Right	Thru	Left	Total	Right	Thru	Left	Total	PK Hour
11:30-12:30	50	4	248	302	0	362	632	994	0	0	0	0	39	85	0	124	1,420
11:45-12:45	52	5	241	298	0	340	629	969	0	0	0	0	35	90	0	125	1,392
12:00-1:00	43	6	247	296	0	318	599	917	0	0	0	0	35	89	0	124	1,337
12:15-1:15	44	8	238	290	0	295	580	875	0	0	0	0	35	91	0	126	1,291
12:30-1:30	38	6	262	306	0	262	579	841	0	0	0	0	40	73	0	113	1,260
12:45-1:45	27	4	252	283	0	226	531	757	0	0	0	0	42	57	0	99	1,139
1:00-2:00	26	3	250	279	0	203	546	749	0	0	0	0	44	59	0	103	1,131
1:15-2:15	21	2	251	274	0	203	600	803	0	0	0	0	49	64	0	113	1,190
1:30-2:30	16	2	238	256	0	166	534	700	0	0	0	0	46	72	0	118	1,074
Peak Volumes:	50	4	248	302	0	362	632	994	0	0	0	0	39	85	0	124	1,420

Cut and Paste	NBL	NBT	NBR	SBL	SBT	SBR	EBL	EBT	EBR	WBL	WBT	WBR
	0	0	0	248	4	50	0	85	39	632	362	0

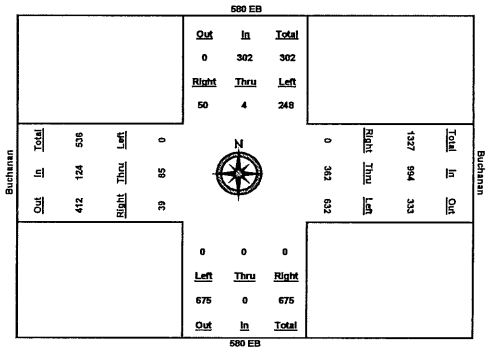

Midday Peak-Hour Volume Count Worksheet

Date: 9/20/08
Counter: Logan & Jane
Intersection Name: East Shore Hwy & Buchanan
Weather: Clear
City: Berkeley

AUTO-CENSUS
Traffic Monitoring and Analysis
870 Castlewood Dr. #1
Los Gatos, CA 95032
Phone 408-826-9673 Fax 408-877-1625

	Buchanan				East Shore Hwy				Buchanan								
	North Approach				East Approach				South Approach				West Approach				
Start Time	Right	Thru	Left	Total	Right	Thru	Left	Total	Right	Thru	Left	Total	Right	Thru	Left	Total	
11:30	0	0	0	0	0	0	0	0	0	0	0	0	0	0	0	0	377
11:45	0	0	0	0	0	188	24	212	38	0	0	38	30	97	0	127	692
12:00	0	0	0	0	0	520	74	594	117	0	0	117	75	283	0	358	583
12:15	0	0	0	0	0	821	97	918	187	0	0	187	102	445	0	547	690
12:30	0	0	0	0	0	1,159	148	1,307	268	0	0	268	147	620	0	767	704
12:45	0	0	0	0	0	1,529	191	1,720	351	0	0	351	184	791	0	975	591
1:00	0	0	0	0	0	1,820	226	2,046	418	0	0	418	219	954	0	1,173	625
1:15	0	0	0	0	0	2,115	276	2,391	482	0	0	482	268	1,121	0	1,389	612
1:30	0	0	0	0	0	2,413	330	2,743	556	0	0	556	308	1,267	0	1,575	637
1:45	0	0	0	0	0	2,708	377	3,085	638	0	0	638	356	1,432	0	1,788	644
2:00	0	0	0	0	0	3,020	411	3,431	723	0	0	723	403	1,598	0	2,001	648
2:15	0	0	0	0	0	3,329	460	3,789	810	0	0	810	445	1,759	0	2,204	623
2:30	0	0	0	0	0	3,606	522	4,128	896	0	0	896	477	1,925	0	2,402	

Peak Hour	Right	Thru	Left	Total	Right	Thru	Left	Total	Right	Thru	Left	Total	Right	Thru	Left	Total	PK Hour
11:30-12:30	0	0	0	0	0	1,159	148	1,307	268	0	0	268	147	620	0	767	2,342
11:45-12:45	0	0	0	0	0	1,341	167	1,508	313	0	0	313	154	694	0	848	2,669
12:00-1:00	0	0	0	0	0	1,300	152	1,452	301	0	0	301	144	671	0	815	2,568
12:15-1:15	0	0	0	0	0	1,294	179	1,473	295	0	0	295	166	676	0	842	2,610
12:30-1:30	0	0	0	0	0	1,254	182	1,436	288	0	0	288	161	647	0	808	2,532
12:45-1:45	0	0	0	0	0	1,179	186	1,365	287	0	0	287	172	641	0	813	2,465
1:00-2:00	0	0	0	0	0	1,200	185	1,385	305	0	0	305	184	644	0	828	2,518
1:15-2:15	0	0	0	0	0	1,214	184	1,398	328	0	0	328	177	638	0	815	2,541
1:30-2:30	0	0	0	0	0	1,193	192	1,385	340	0	0	340	169	658	0	827	2,552
Peak Volumes:	0	0	0	0	0	1,341	167	1,508	313	0	0	313	154	694	0	848	2,669

Cut and Paste	NBL	NBT	NBR	SBL	SBT	SBR	EBL	EBT	EBR	WBL	WBT	WBR
	0	0	313	0	0	0	0	694	154	167	1,341	0

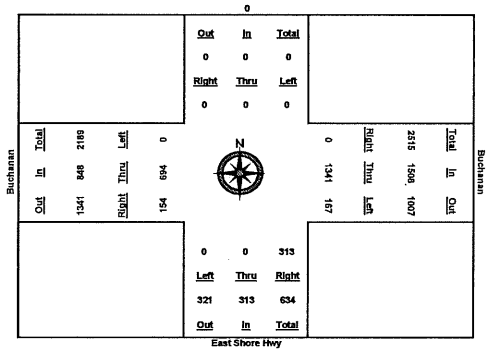

MARKS TRAFFIC DATA

CITY OF ALBANY

fp
Mietek 916-806-0250

File Name : jackson-buchanan-s
Site Code : 5
Start Date : 9/20/2008
Page No : 1

Groups Printed- Vehicles Only

	JACKSON ST Southbound				BUCHANAN ST Westbound				JACKSON ST Northbound				BUCHANAN ST Eastbound				
Start Time	RT	TH	LT	App. Total	RT	TH	LT	App. Total	RT	TH	LT	App. Total	RT	TH	LT	App. Total	Int. Total
11:30	27	10	5	42	4	252	11	267	7	10	17	34	16	196	10	222	565
11:45	28	11	4	43	5	242	12	259	7	8	10	25	18	224	7	249	576
Total	55	21	9	85	9	494	23	526	14	18	27	59	34	420	17	471	1141
12:00	30	13	6	49	3	210	3	216	3	9	17	29	17	241	5	263	557
12:15	33	9	2	44	3	242	9	254	16	14	16	46	13	269	11	293	637
12:30	25	11	5	41	3	274	7	284	15	17	14	46	11	215	14	240	611
12:45	28	15	3	46	6	230	6	242	10	10	11	31	18	217	3	238	557
Total	116	48	16	180	15	956	25	996	44	50	58	152	59	942	33	1034	2362
13:00	28	8	3	39	5	194	7	206	7	18	19	44	14	203	7	224	513
13:15	22	16	6	44	6	254	4	264	11	11	19	41	16	198	9	223	572
13:30	28	10	8	46	4	234	8	246	10	10	21	41	17	224	13	254	587
13:45	29	12	6	47	3	205	5	213	4	11	11	26	7	201	10	218	504
Total	107	46	23	176	18	887	24	929	32	50	70	152	54	826	39	919	2176
14:00	25	10	7	42	3	246	6	255	6	13	18	37	4	236	5	245	579
14:15	32	8	3	43	5	214	8	227	9	11	11	31	8	227	15	250	551
Grand Total	335	133	58	526	50	2797	86	2933	105	142	184	431	159	2651	109	2919	6809
Apprch %	63.7	25.3	11		1.7	95.4	2.9		24.4	32.9	42.7		5.4	90.8	3.7		
Total %	4.9	2	0.9	7.7	0.7	41.1	1.3	43.1	1.5	2.1	2.7	6.3	2.3	38.9	1.6	42.9	

	JACKSON ST Southbound				BUCHANAN ST Westbound				JACKSON ST Northbound				BUCHANAN ST Eastbound				
Start Time	RT	TH	LT	App. Total	RT	TH	LT	App. Total	RT	TH	LT	App. Total	RT	TH	LT	App. Total	Int. Total
Peak Hour Analysis From 11:30 to 14:15 - Peak 1 of 1																	
Peak Hour for Entire Intersection Begins at 11:45																	
11:45	28	11	4	43	5	242	12	259	7	8	10	25	18	224	7	249	576
12:00	30	13	6	49	3	210	3	216	3	9	17	29	17	241	5	263	557
12:15	33	9	2	44	3	242	9	254	16	14	16	46	13	269	11	293	637
12:30	25	11	5	41	3	274	7	284	15	17	14	46	11	215	14	240	611
Total Volume	116	44	17	177	14	968	31	1013	41	48	57	146	59	949	37	1045	2381
% App. Total	65.5	24.9	9.6		1.4	95.6	3.1		28.1	32.9	39		5.6	90.8	3.5		
PHF	.879	.846	.708	.903	.700	.883	.646	.892	.641	.706	.838	.793	.819	.882	.661	.892	.934

MARKS TRAFFIC DATA

CITY OF ALBANY

fp
Mietek 916-806-0250

File Name : jackson-buchanan-s
Site Code : 5
Start Date : 9/20/2008
Page No : 2

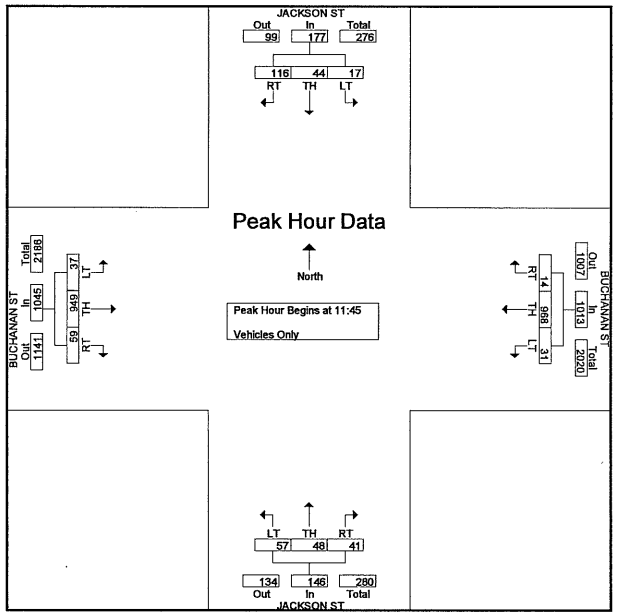

MARKS TRAFFIC DATA

CITY OF ALBANY

fp
Mietek 916-806-0250

File Name : pablo-buchanan-s
Site Code : 6
Start Date : 9/20/2008
Page No : 1

Groups Printed- Vehicles Only

	SAN PABLO AVE Southbound				PAINT STORE D/W Westbound				SAN PABLO AVE Northbound				BUCHANAN ST Eastbound				
Start Time	RT	TH	LT	App. Total	RT	TH	LT	App. Total	RT	TH	LT	App. Total	RT	TH	LT	App. Total	Int. Total
11:30	66	193	1	260	0	0	0	0	0	220	7	227	2	0	53	55	542
11:45	57	185	0	242	0	0	0	0	0	209	12	221	6	0	53	59	522
Total	123	378	1	502	0	0	0	0	0	429	19	448	8	0	106	114	1064
12:00	45	187	1	233	0	0	0	0	1	209	12	222	2	0	41	43	498
12:15	64	227	0	291	0	0	0	0	0	204	10	214	2	0	52	54	559
12:30	61	221	1	283	0	0	0	0	1	202	15	218	1	0	52	53	554
12:45	54	216	0	270	2	0	0	2	1	217	13	231	4	0	41	45	548
Total	224	851	2	1077	2	0	0	2	3	832	50	885	9	0	186	195	2159
13:00	42	230	0	272	0	0	0	0	0	223	17	240	0	0	39	39	551
13:15	62	231	1	294	0	0	0	0	2	210	8	220	2	0	49	51	565
13:30	61	208	1	270	0	0	0	0	3	214	11	228	4	0	48	52	550
13:45	53	206	0	259	1	0	0	1	1	236	10	247	1	0	35	36	543
Total	218	875	2	1095	1	0	0	1	6	883	46	935	7	0	171	178	2209
14:00	47	205	5	257	0	0	0	0	1	206	9	216	2	0	46	48	521
14:15	56	215	2	273	0	0	0	0	0	231	16	247	5	0	46	51	571
Grand Total	668	2524	12	3204	3	0	0	3	10	2581	140	2731	31	0	555	586	6524
Apprch %	20.8	78.8	0.4		100	0	0		0.4	94.5	5.1		5.3	0	94.7		
Total %	10.2	38.7	0.2	49.1	0	0	0	0	0.2	39.6	2.1	41.9	0.5	0	8.5	9	

	SAN PABLO AVE Southbound				PAINT STORE D/W Westbound				SAN PABLO AVE Northbound				BUCHANAN ST Eastbound				
Start Time	RT	TH	LT	App. Total	RT	TH	LT	App. Total	RT	TH	LT	App. Total	RT	TH	LT	App. Total	Int. Total
Peak Hour Analysis From 11:30 to 14:15 - Peak 1 of 1																	
Peak Hour for Entire Intersection Begins at 12:30																	
12:30	61	221	1	283	0	0	0	0	1	202	15	218	1	0	52	53	554
12:45	54	216	0	270	2	0	0	2	1	217	13	231	4	0	41	45	548
13:00	42	230	0	272	0	0	0	0	0	223	17	240	0	0	39	39	551
13:15	62	231	1	294	0	0	0	0	2	210	8	220	2	0	49	51	565
Total Volume	219	898	2	1119	2	0	0	2	4	852	53	909	7	0	181	188	2218
% App. Total	19.6	80.3	0.2		100	0	0		0.4	93.7	5.8		3.7	0	96.3		
PHF	.883	.972	.500	.952	.250	.000	.000	.250	.500	.955	.779	.947	.438	.000	.870	.887	.981

MARKS TRAFFIC DATA

CITY OF ALBANY

fp
Mietek 916-806-0250

File Name : pablo-buchanan-s
Site Code : 6
Start Date : 9/20/2008
Page No : 2

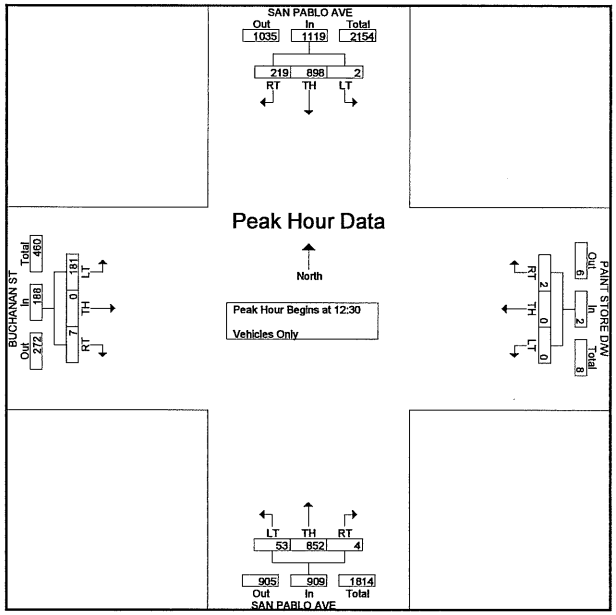

MARKS TRAFFIC DATA

CITY OF ALBANY

fp
Mietek 916-806-0250

File Name : pablo-marin-s
Site Code : 7
Start Date : 9/20/2008
Page No : 1

Groups Printed- Vehicles Only

	SAN PABLO AVE Southbound				MARIN AVE Westbound				SAN PABLO AVE Northbound				MARIN AVE Eastbound				
Start Time	RT	TH	LT	App. Total	RT	TH	LT	App. Total	RT	TH	LT	App. Total	RT	TH	LT	App. Total	Int. Total
11:30	4	148	24	176	40	130	30	200	21	205	44	270	23	111	9	143	789
11:45	7	159	39	205	39	162	29	230	16	192	28	236	25	120	17	162	833
Total	11	307	63	381	79	292	59	430	37	397	72	506	48	231	26	305	1622
12:00	4	144	37	185	29	141	23	193	16	169	32	217	44	147	10	201	796
12:15	6	156	32	194	29	140	16	185	17	175	40	232	46	166	10	222	833
12:30	5	190	30	225	35	173	31	239	29	172	26	227	29	133	12	174	865
12:45	3	174	29	206	37	135	42	214	18	178	37	233	51	113	6	170	823
Total	18	664	128	810	130	589	112	831	80	694	135	909	170	559	38	767	3317
13:00	6	173	40	219	43	112	23	178	29	195	30	254	27	113	13	153	804
13:15	7	187	42	236	38	147	29	214	23	184	36	243	26	132	17	175	868
13:30	3	172	28	203	34	179	23	236	11	181	22	214	31	140	9	180	833
13:45	2	177	24	203	39	117	33	189	19	203	28	250	44	136	10	190	832
Total	18	709	134	861	154	555	108	817	82	763	116	961	128	521	49	698	3337
14:00	6	162	39	207	39	158	31	228	23	176	35	234	23	141	13	177	846
14:15	4	170	36	210	49	142	29	220	16	204	33	253	48	137	15	200	883
Grand Total	57	2012	400	2469	451	1736	339	2526	238	2234	391	2863	417	1589	141	2147	10005
Apprch %	2.3	81.5	16.2		17.9	68.7	13.4		8.3	78	13.7		19.4	74	6.6		
Total %	0.6	20.1	4	24.7	4.5	17.4	3.4	25.2	2.4	22.3	3.9	28.6	4.2	15.9	1.4	21.5	

	SAN PABLO AVE Southbound				MARIN AVE Westbound				SAN PABLO AVE Northbound				MARIN AVE Eastbound				
Start Time	RT	TH	LT	App. Total	RT	TH	LT	App. Total	RT	TH	LT	App. Total	RT	TH	LT	App. Total	Int. Total
Peak Hour Analysis From 11:30 to 14:15 - Peak 1 of 1																	
Peak Hour for Entire Intersection Begins at 13:30																	
13:30	3	172	28	203	34	179	23	236	11	181	22	214	31	140	9	180	833
13:45	2	177	24	203	39	117	33	189	19	203	28	250	44	136	10	190	832
14:00	6	162	39	207	39	158	31	228	23	176	35	234	23	141	13	177	846
14:15	4	170	36	210	49	142	29	220	16	204	33	253	48	137	15	200	883
Total Volume	15	681	127	823	161	596	116	873	69	764	118	951	146	554	47	747	3394
% App. Total	1.8	82.7	15.4		18.4	68.3	13.3		7.3	80.3	12.4		19.5	74.2	6.3		
PHF	.625	.962	.814	.980	.821	.832	.879	.925	.750	.936	.843	.940	.760	.982	.783	.934	.961

MARKS TRAFFIC DATA

CITY OF ALBANY

fp
Mietek 916-806-0250

File Name : pablo-marin-s
Site Code : 7
Start Date : 9/20/2008
Page No : 2

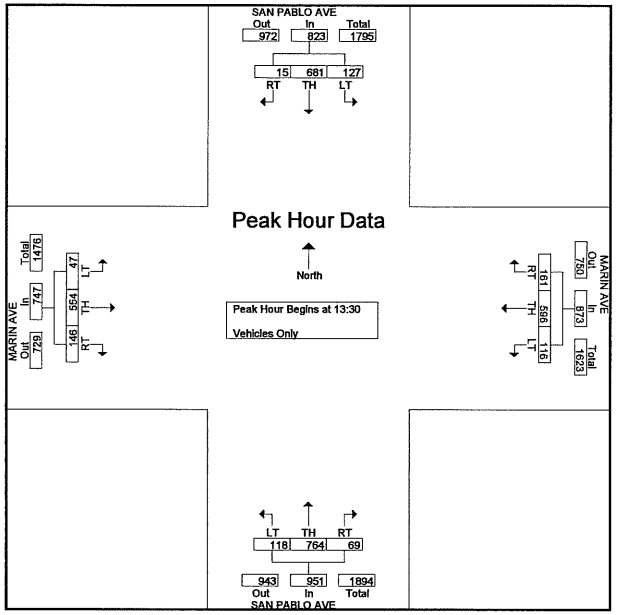

Midday Peak-Hour Volume Count Worksheet

Date: 9/20/08
Counter: Patti & Sean
Intersection Name: Masonic Ave. and Marin Ave.
Weather: Clear
City: Albany

AUTO-CENSUS
Traffic Monitoring and Analysis
570 Castlewood Dr. #1
Los Gatos, CA 95032
Phone 408-826-9573 Fax 408-877-1625

	Masonic Ave. North Approach				Marin Ave. East Approach				Masonic Ave. South Approach				Marin Ave. West Approach				
Start Time	Right	Thru	Left	Total	Right	Thru	Left	Total	Right	Thru	Left	Total	Right	Thru	Left	Total	
11:30	0	0	0	0	0	0	0	0	0	0	0	0	0	0	0	0	286
11:45	7	11	7	25	11	107	3	121	7	18	6	31	7	94	8	109	473
12:00	26	32	22	80	31	283	7	321	16	47	17	80	14	246	18	278	474
12:15	35	56	32	123	49	440	9	498	21	75	30	126	18	439	29	486	539
12:30	50	72	45	167	74	619	10	703	26	108	39	173	24	664	41	729	492
12:45	58	108	60	224	100	807	12	919	32	137	52	221	30	816	54	900	477
1:00	68	128	73	269	120	953	12	1,085	37	183	60	280	37	1,007	63	1,107	477
1:15	79	151	91	321	128	1,110	13	1,251	40	216	75	331	44	1,200	71	1,315	492
1:30	97	169	99	365	149	1,297	13	1,459	46	260	81	387	46	1,374	79	1,499	453
1:45	111	197	106	414	172	1,473	16	1,661	49	294	86	429	53	1,522	84	1,659	420
2:00	125	225	115	465	184	1,629	20	1,833	50	318	92	460	57	1,680	88	1,825	482
2:15	143	245	129	517	193	1,830	22	2,045	54	341	100	495	62	1,857	89	2,008	426
2:30	154	259	143	556	217	1,962	22	2,201	61	386	115	562	69	2,003	100	2,172	

Peak Hour	Right	Thru	Left	Total	Right	Thru	Left	Total	Right	Thru	Left	Total	Right	Thru	Left	Total	PK Hour
11:30-12:30	50	72	45	167	74	619	10	703	26	108	39	173	24	664	41	729	1,772
11:45-12:45	51	95	53	199	89	700	9	798	25	119	46	190	23	722	46	791	1,978
12:00-1:00	42	96	51	189	89	670	5	764	21	136	43	200	23	761	45	829	1,982
12:15-1:15	44	95	59	198	79	670	4	753	19	141	45	205	26	761	42	829	1,985
12:30-1:30	47	97	54	198	75	678	3	756	20	152	42	214	22	710	38	770	1,938
12:45-1:45	53	91	46	190	72	666	4	742	17	157	34	208	23	706	30	759	1,899
1:00-2:00	57	97	42	196	64	676	8	748	13	135	32	180	20	673	25	718	1,842
1:15-2:15	64	94	38	196	65	720	9	794	14	125	25	164	18	657	18	693	1,847
1:30-2:30	57	90	44	191	68	665	9	742	15	126	34	175	23	629	21	673	1,781
Peak Volumes:	44	95	59	198	79	670	4	753	19	141	45	205	26	761	42	829	1,986

Cut and Paste	NBL	NBT	NBR	SBL	SBT	SBR	EBL	EBT	EBR	WBL	WBT	WBR
	45	141	19	59	95	44	42	761	26	4	670	79

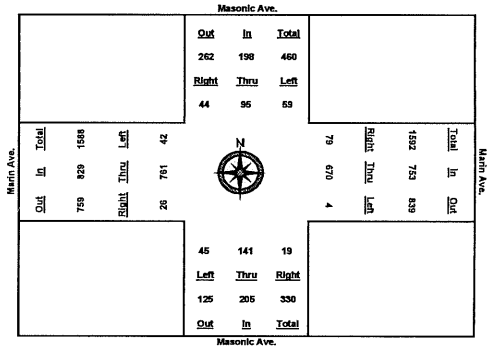

MARKS TRAFFIC DATA

CITY OF ALBANY

fp
Mietek 916-806-0250

File Name : jackson-monroe-s
Site Code : 9
Start Date : 9/20/2008
Page No : 1

Groups Printed- Vehicles Only

	JACKSON ST Southbound				MONROE ST Westbound				JACKSON ST Northbound				APARTMENT COMPLEX D/W Eastbound				
Start Time	RT	TH	LT	App. Total	RT	TH	LT	App. Total	RT	TH	LT	App. Total	RT	TH	LT	App. Total	Int. Total
11:30	1	10	6	17	7	1	5	13	4	10	0	14	0	1	0	1	45
11:45	1	14	12	27	3	0	6	9	10	13	0	23	0	0	0	0	59
Total	2	24	18	44	10	1	11	22	14	23	0	37	0	1	0	1	104
12:00	1	14	6	21	5	0	4	9	6	12	0	18	0	0	1	1	49
12:15	1	15	5	21	3	0	10	13	6	16	1	23	1	0	0	1	58
12:30	1	10	4	15	13	0	2	15	6	18	0	24	0	0	0	0	54
12:45	1	16	5	22	5	0	3	8	2	12	0	14	0	0	1	1	45
Total	4	55	20	79	26	0	19	45	20	58	1	79	1	0	2	3	206
13:00	0	13	7	20	6	0	5	11	7	14	0	21	0	0	2	2	54
13:15	0	10	5	15	6	0	7	13	4	15	0	19	0	0	1	1	48
13:30	0	11	1	12	6	3	7	16	6	17	0	23	0	1	0	1	52
13:45	0	6	9	15	6	0	3	9	2	9	0	11	1	1	0	2	37
Total	0	40	22	62	24	3	22	49	19	55	0	74	1	2	3	6	191
14:00	3	6	3	12	6	0	1	7	6	12	0	18	0	0	0	0	37
14:15	0	0	0	0	0	0	0	0	0	0	0	0	0	0	0	0	0
Grand Total	9	125	63	197	66	4	53	123	59	148	1	208	2	3	5	10	538
Apprch %	4.6	63.5	32		53.7	3.3	43.1		28.4	71.2	0.5		20	30	50		
Total %	1.7	23.2	11.7	36.6	12.3	0.7	9.9	22.9	11	27.5	0.2	38.7	0.4	0.6	0.9	1.9	

	JACKSON ST Southbound				MONROE ST Westbound				JACKSON ST Northbound				APARTMENT COMPLEX D/W Eastbound				
Start Time	RT	TH	LT	App. Total	RT	TH	LT	App. Total	RT	TH	LT	App. Total	RT	TH	LT	App. Total	Int. Total
Peak Hour Analysis From 11:30 to 14:00 - Peak 1 of 1																	
Peak Hour for Entire Intersection Begins at 11:45																	
11:45	1	14	12	27	3	0	6	9	10	13	0	23	0	0	0	0	59
12:00	1	14	6	21	5	0	4	9	6	12	0	18	0	0	1	1	49
12:15	1	15	5	21	3	0	10	13	6	16	1	23	1	0	0	1	58
12:30	1	10	4	15	13	0	2	15	6	18	0	24	0	0	0	0	54
Total Volume	4	53	27	84	24	0	22	46	28	59	1	88	1	0	1	2	220
% App. Total	4.8	63.1	32.1		52.2	0	47.8		31.8	67	1.1		50	0	50		
PHF	1.000	.883	.563	.778	.462	.000	.550	.767	.700	.819	.250	.917	.250	.000	.250	.500	.932

MARKS TRAFFIC DATA

CITY OF ALBANY

fp
Mietek 916-806-0250

File Name : jackson-monroe-s
Site Code : 9
Start Date : 9/20/2008
Page No : 2

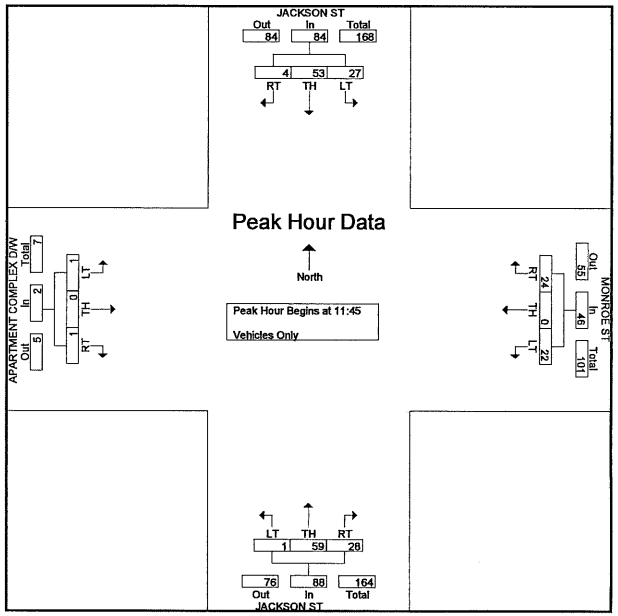

MARKS TRAFFIC DATA

CITY OF ALBANY

fp
Mietek 916-806-0250

File Name : pablo-monroe-s
Site Code : 10
Start Date : 9/20/2008
Page No : 1

Groups Printed- Vehicles Only

	SAN PABLO AV Southbound				D/W Westbound				SAN PABLO AV Northbound				MONROE ST Eastbound				
Start Time	RT	TH	LT	App. Total	RT	TH	LT	App. Total	RT	TH	LT	App. Total	RT	TH	LT	App. Total	Int. Total
11:30	5	203	0	208	1	0	0	1	0	221	6	227	9	0	9	18	454
11:45	8	214	0	222	0	0	2	2	0	253	4	257	8	0	8	16	497
Total	13	417	0	430	1	0	2	3	0	474	10	484	17	0	17	34	951
12:00	7	199	0	206	1	0	0	1	0	231	9	240	5	0	2	7	454
12:15	7	235	2	244	1	0	0	1	2	229	8	239	6	0	8	14	498
12:30	8	270	0	278	2	0	0	2	3	229	9	241	8	0	14	22	543
12:45	4	260	0	264	1	0	0	1	0	244	5	249	6	0	2	8	522
Total	26	964	2	992	5	0	0	5	5	933	31	969	25	0	26	51	2017
13:00	6	214	0	220	2	0	0	2	0	230	7	237	10	0	6	16	475
13:15	10	235	0	245	2	0	0	2	0	228	10	238	6	0	10	16	501
13:30	6	218	0	224	0	0	0	0	0	215	5	220	10	0	12	22	466
13:45	7	242	0	249	0	0	0	0	0	248	2	250	5	0	2	7	506
Total	29	909	0	938	4	0	0	4	0	921	24	945	31	0	30	61	1948
14:00	5	228	0	233	0	0	0	0	0	232	2	234	8	0	3	11	478
14:15	7	258	0	265	0	0	0	0	0	252	5	257	3	0	1	4	526
Grand Total	80	2776	2	2858	10	0	2	12	5	2812	72	2889	84	0	77	161	5920
Apprch %	2.8	97.1	0.1		83.3	0	16.7		0.2	97.3	2.5		52.2	0	47.8		
Total %	1.4	46.9	0	48.3	0.2	0	0	0.2	0.1	47.5	1.2	48.8	1.4	0	1.3	2.7	

	SAN PABLO AV Southbound				D/W Westbound				SAN PABLO AV Northbound				MONROE ST Eastbound				
Start Time	RT	TH	LT	App. Total	RT	TH	LT	App. Total	RT	TH	LT	App. Total	RT	TH	LT	App. Total	Int. Total
Peak Hour Analysis From 11:30 to 14:15 - Peak 1 of 1																	
Peak Hour for Entire Intersection Begins at 12:30																	
12:30	8	270	0	278	2	0	0	2	3	229	9	241	8	0	14	22	543
12:45	4	260	0	264	1	0	0	1	0	244	5	249	6	0	2	8	522
13:00	6	214	0	220	2	0	0	2	0	230	7	237	10	0	6	16	475
13:15	10	235	0	245	2	0	0	2	0	228	10	238	6	0	10	16	501
Total Volume	28	979	0	1007	7	0	0	7	3	931	31	965	30	0	32	62	2041
% App. Total	2.8	97.2	0		100	0	0		0.3	96.5	3.2		48.4	0	51.6		
PHF	.700	.906	.000	.906	.875	.000	.000	.875	.250	.954	.775	.969	.750	.000	.571	.705	.940

MARKS TRAFFIC DATA

CITY OF ALBANY

fp
Mietek 916-806-0250

File Name : pablo-monroe-s
Site Code : 10
Start Date : 9/20/2008
Page No : 2

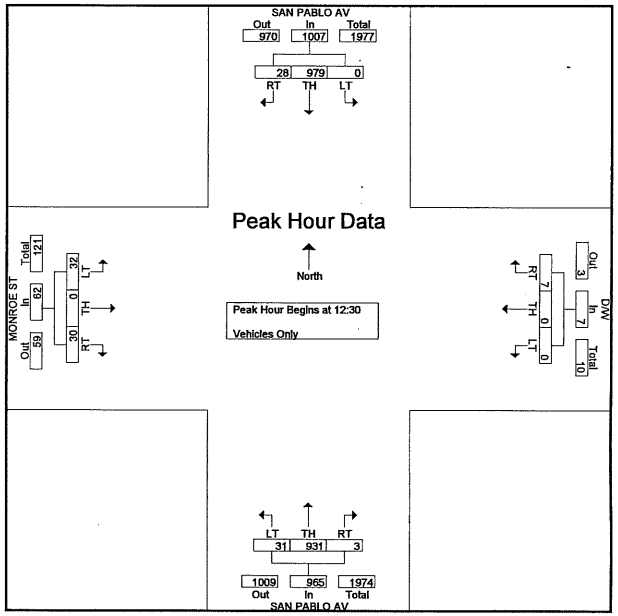

MARKS TRAFFIC DATA

CITY OF ALBANY

fp
Mietek 916-806-0250

File Name : pablo-dartmouth-s
Site Code : 11
Start Date : 9/20/2008
Page No : 1

Groups Printed- Vehicles Only

	SAN PABLO AVE Southbound				DARTMOUTH ST Westbound				SAN PABLO AVE Northbound				0 Eastbound				
Start Time	RT	TH	LT	App. Total	RT	TH	LT	App. Total	RT	TH	LT	App. Total	RT	TH	LT	App. Total	Int. Total
11:30	0	201	7	208	14	0	3	17	0	203	0	203	0	0	0	0	428
11:45	0	210	8	218	20	0	4	24	1	234	0	235	0	0	0	0	477
Total	0	411	15	426	34	0	7	41	1	437	0	438	0	0	0	0	905
12:00	0	202	8	210	7	0	1	8	6	228	0	234	0	0	0	0	452
12:15	0	226	12	238	20	0	3	23	3	215	0	218	0	0	0	0	479
12:30	0	264	12	276	12	0	5	17	4	223	0	227	0	0	0	0	520
12:45	0	261	8	269	20	0	0	20	5	224	0	229	0	0	0	0	518
Total	0	953	40	993	59	0	9	68	18	890	0	908	0	0	0	0	1969
13:00	0	218	3	221	11	0	4	15	0	224	0	224	0	0	0	0	460
13:15	0	233	5	238	16	0	5	21	2	225	0	227	0	0	0	0	486
13:30	0	224	9	233	10	0	3	13	1	207	0	208	0	0	0	0	454
13:45	0	230	11	241	11	0	4	15	5	235	0	240	0	0	0	0	496
Total	0	905	28	933	48	0	16	64	8	891	0	899	0	0	0	0	1896
14:00	0	235	4	239	11	0	4	15	2	219	0	221	0	0	0	0	475
14:15	0	238	12	250	12	0	2	14	4	237	0	241	0	0	0	0	505
Grand Total	0	2742	99	2841	164	0	38	202	33	2674	0	2707	0	0	0	0	5750
Apprch %	0	96.5	3.5		81.2	0	18.8		1.2	98.8	0		0	0	0		
Total %	0	47.7	1.7	49.4	2.9	0	0.7	3.5	0.6	46.5	0	47.1	0	0	0	0	

	SAN PABLO AVE Southbound				DARTMOUTH ST Westbound				SAN PABLO AVE Northbound				0 Eastbound				
Start Time	RT	TH	LT	App. Total	RT	TH	LT	App. Total	RT	TH	LT	App. Total	RT	TH	LT	App. Total	Int. Total
Peak Hour Analysis From 11:30 to 14:15 - Peak 1 of 1																	
Peak Hour for Entire Intersection Begins at 12:30																	
12:30	0	264	12	276	12	0	5	17	4	223	0	227	0	0	0	0	520
12:45	0	261	8	269	20	0	0	20	5	224	0	229	0	0	0	0	518
13:00	0	218	3	221	11	0	4	15	0	224	0	224	0	0	0	0	460
13:15	0	233	5	238	16	0	5	21	2	225	0	227	0	0	0	0	486
Total Volume	0	976	28	1004	59	0	14	73	11	896	0	907	0	0	0	0	1984
% App. Total	0	97.2	2.8		80.8	0	19.2		1.2	98.8	0		0	0	0		
PHF	.000	.924	.583	.909	.738	.000	.700	.869	.550	.996	.000	.990	.000	.000	.000	.000	.954

MARKS TRAFFIC DATA

CITY OF ALBANY

fp
Mietek 916-806-0250

File Name : pablo-dartmouth-s
Site Code : 11
Start Date : 9/20/2008
Page No : 2

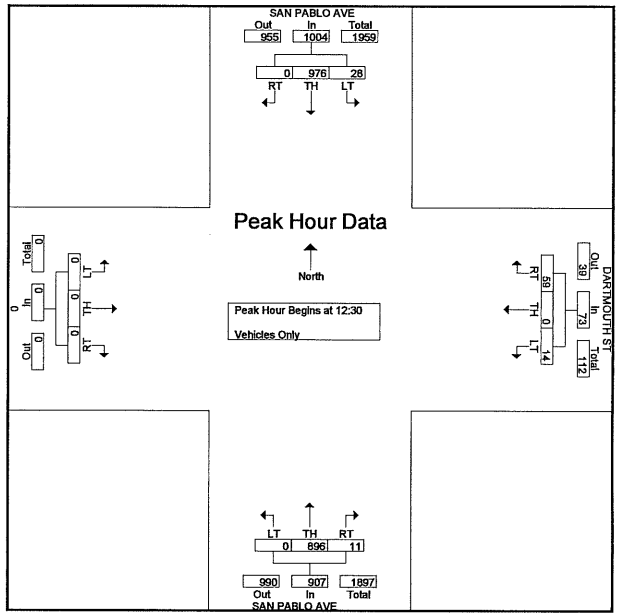

MARKS TRAFFIC DATA

CITY OF ALBANY

fp
Mietek 916-806-0250

File Name : pablo-harrison-s
Site Code : 12
Start Date : 9/20/2008
Page No : 1

Groups Printed- Vehicles Only

	SAN PABLO AVE Southbound				HARRISON ST Westbound				SAN PABLO AVE Northbound				HARRISON ST Eastbound				
Start Time	RT	TH	LT	App. Total	RT	TH	LT	App. Total	RT	TH	LT	App. Total	RT	TH	LT	App. Total	Int. Total
11:30	10	202	1	213	5	0	0	5	0	231	12	243	21	2	10	33	494
11:45	8	210	1	219	5	0	1	6	1	226	4	231	11	0	7	18	474
Total	18	412	2	432	10	0	1	11	1	457	16	474	32	2	17	51	968
12:00	10	206	2	218	5	1	0	6	1	214	17	232	15	0	15	30	486
12:15	7	230	2	239	5	2	1	8	0	209	13	222	19	0	9	28	497
12:30	14	235	0	249	4	0	1	5	4	218	8	230	10	1	13	24	508
12:45	15	242	1	258	4	3	1	8	1	208	12	221	12	1	12	25	512
Total	46	913	5	964	18	6	3	27	6	849	50	905	56	2	49	107	2003
13:00	12	213	0	225	3	1	0	4	3	206	13	222	16	0	14	30	481
13:15	9	238	3	250	6	0	1	7	1	217	8	226	18	1	14	33	516
13:30	12	239	1	252	2	0	1	3	2	211	15	228	20	1	11	32	515
13:45	14	240	2	256	2	2	1	5	3	236	12	251	7	2	5	14	526
Total	47	930	6	983	13	3	3	19	9	870	48	927	61	4	44	109	2038
14:00	9	222	0	231	3	1	0	4	6	214	9	229	12	0	6	18	482
14:15	5	242	1	248	7	0	0	7	1	229	16	246	6	0	7	13	514
Grand Total	125	2719	14	2858	51	10	7	68	23	2619	139	2781	167	8	123	298	6005
Apprch %	4.4	95.1	0.5		75	14.7	10.3		0.8	94.2	5		56	2.7	41.3		
Total %	2.1	45.3	0.2	47.6	0.8	0.2	0.1	1.1	0.4	43.6	2.3	46.3	2.8	0.1	2	5	

	SAN PABLO AVE Southbound				HARRISON ST Westbound				SAN PABLO AVE Northbound				HARRISON ST Eastbound				
Start Time	RT	TH	LT	App. Total	RT	TH	LT	App. Total	RT	TH	LT	App. Total	RT	TH	LT	App. Total	Int. Total
Peak Hour Analysis From 11:30 to 14:15 - Peak 1 of 1																	
Peak Hour for Entire Intersection Begins at 13:15																	
13:15	9	238	3	250	6	0	1	7	1	217	8	226	18	1	14	33	516
13:30	12	239	1	252	2	0	1	3	2	211	15	228	20	1	11	32	515
13:45	14	240	2	256	2	2	1	5	3	236	12	251	7	2	5	14	526
14:00	9	222	0	231	3	1	0	4	6	214	9	229	12	0	6	18	482
Total Volume	44	939	6	989	13	3	3	19	12	878	44	934	57	4	36	97	2039
% App. Total	4.4	94.9	0.6		68.4	15.8	15.8		1.3	94	4.7		58.8	4.1	37.1		
PHF	.786	.978	.500	.966	.542	.375	.750	.679	.500	.930	.733	.930	.713	.500	.643	.735	.969

MARKS TRAFFIC DATA

CITY OF ALBANY

fp
Mietek 916-806-0250

File Name : pablo-harrison-s
Site Code : 12
Start Date : 9/20/2008
Page No : 2

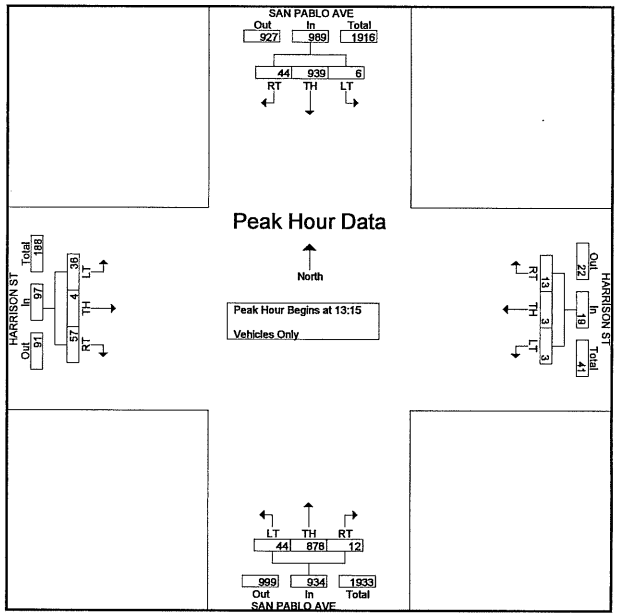

Midday Peak-Hour Volume Count Worksheet

Date: 9/20/08
Counter: Jess and Jezz
Intersection Name: 8th and Gilman
Weather: Clear
City: Albany

AUTO-CENSUS
Traffic Monitoring and Analysis
870 Castlewood Dr. #1
Los Gatos, CA 95032
Phone 408-826-9673 Fax 408-877-1625

	8th				Gilman				8th				Gilman				
	North Approach				East Approach				South Approach				West Approach				
Start Time	Right	Thru	Left	Total	Right	Thru	Left	Total	Right	Thru	Left	Total	Right	Thru	Left	Total	
11:30	0	0	0	0	0	0	0	0	0	0	0	0	0	0	0	0	303
11:45	7	3	5	15	3	145	1	149	0	3	2	5	3	124	7	134	344
12:00	15	5	10	30	9	306	2	317	0	7	2	9	4	274	13	291	307
12:15	22	7	13	42	18	465	3	486	3	8	3	14	7	390	15	412	343
12:30	29	14	16	59	30	625	11	666	3	10	6	19	9	528	16	553	317
12:45	34	19	21	74	37	780	13	830	3	11	10	24	11	655	20	686	357
1:00	43	21	25	89	42	949	16	1,007	7	12	12	31	14	806	24	844	396
1:15	55	28	27	110	48	1,125	22	1,195	10	15	15	40	21	971	30	1,022	346
1:30	63	32	29	124	52	1,262	26	1,340	12	17	19	48	24	1,138	39	1,201	319
1:45	73	35	34	142	57	1,416	28	1,501	13	18	20	51	28	1,266	44	1,338	328
2:00	78	38	40	156	61	1,574	31	1,666	17	20	21	58	30	1,399	51	1,480	314
2:15	87	41	47	175	65	1,733	32	1,830	19	22	23	64	34	1,509	62	1,605	327
2:30	99	45	55	199	73	1,888	41	2,002	23	25	23	71	37	1,625	67	1,729	

Peak Hour	Right	Thru	Left	Total	Right	Thru	Left	Total	Right	Thru	Left	Total	Right	Thru	Left	Total	PK Hour
11:30-12:30	29	14	16	59	30	625	11	666	3	10	6	19	9	528	16	553	1,297
11:45-12:45	27	16	16	59	34	635	12	681	3	8	8	19	8	531	13	552	1,311
12:00-1:00	28	16	15	59	33	643	14	690	7	5	10	22	10	532	11	553	1,324
12:15-1:15	33	21	14	68	30	660	19	709	7	7	12	26	14	581	15	610	1,413
12:30-1:30	34	18	13	65	22	637	15	674	9	7	13	29	15	610	23	648	1,416
12:45-1:45	39	16	13	68	20	636	15	671	10	7	10	27	17	611	24	652	1,418
1:00-2:00	35	17	15	67	19	625	15	659	10	8	9	27	16	593	27	636	1,389
1:15-2:15	32	13	20	65	17	608	10	635	9	7	8	24	13	538	32	583	1,307
1:30-2:30	36	13	26	75	21	626	15	662	11	8	4	23	13	487	28	528	1,288
Peak Volumes:	39	16	13	68	20	636	15	671	10	7	10	27	17	611	24	652	1,418

Cut and Paste	NBL	NBT	NBR	SBL	SBT	SBR	EBL	EBT	EBR	WBL	WBT	WBR
	10	7	10	13	16	39	24	611	17	15	636	20

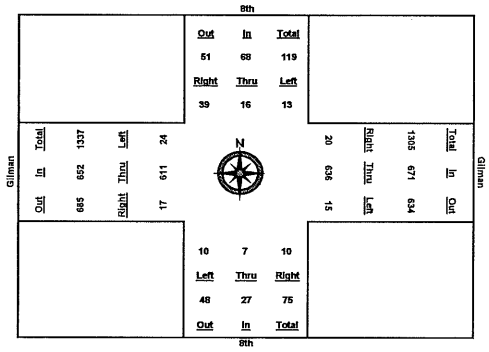

Midday Peak-Hour Volume Count Worksheet

Date: 9/20/08
Counter: Joy and Dianne
Intersection Name: Hopkins and Gilman
Weather: Clear
City: Albany

AUTO-CENSUS
Traffic Monitoring and Analysis
870 Castlewood Dr. #1
Los Gatos, CA 95032
Phone 408-826-9673 Fax 408-877-1625

	Hopkins				none				Hopkins				Gilman				
	North Approach				East Approach				South Approach				West Approach				
Start Time	Right	Thru	Left	Total	Right	Thru	Left	Total	Right	Thru	Left	Total	Right	Thru	Left	Total	
11:30	0	0	0	0	0	0	0	0	0	0	0	0	0	0	0	0	150
11:45	42	24	0	66	0	0	0	0	0	16	2	18	1	0	65	66	227
12:00	132	45	0	177	0	0	0	0	0	39	7	46	5	0	149	154	223
12:15	209	58	0	267	0	0	0	0	0	79	7	86	7	0	240	247	227
12:30	301	73	0	374	0	0	0	0	0	109	7	116	7	0	330	337	251
12:45	398	89	0	487	0	0	0	0	0	145	8	153	9	0	429	438	252
1:00	473	114	0	587	0	0	0	0	0	180	11	191	10	0	542	552	282
1:15	571	139	0	710	0	0	0	0	0	222	13	235	15	0	652	667	255
1:30	657	163	0	820	0	0	0	0	0	260	18	278	15	0	754	769	184
1:45	712	184	0	896	0	0	0	0	0	280	21	301	16	0	838	854	212
2:00	787	215	0	1,002	0	0	0	0	0	302	21	323	16	0	922	938	215
2:15	875	241	0	1,116	0	0	0	0	0	332	21	353	18	0	991	1,009	227
2:30	959	270	0	1,229	0	0	0	0	0	358	23	381	19	0	1,076	1,095	

Peak Hour	Right	Thru	Left	Total	Right	Thru	Left	Total	Right	Thru	Left	Total	Right	Thru	Left	Total	PK Hour
11:30-12:30	301	73	0	374	0	0	0	0	0	109	7	116	7	0	330	337	827
11:45-12:45	356	65	0	421	0	0	0	0	0	129	6	135	8	0	364	372	928
12:00-1:00	341	69	0	410	0	0	0	0	0	141	4	145	5	0	393	398	953
12:15-1:15	362	81	0	443	0	0	0	0	0	143	6	149	8	0	412	420	1,012
12:30-1:30	356	90	0	446	0	0	0	0	0	151	11	162	8	0	424	432	1,040
12:45-1:45	314	95	0	409	0	0	0	0	0	135	13	148	7	0	409	416	973
1:00-2:00	314	101	0	415	0	0	0	0	0	122	10	132	6	0	380	386	933
1:15-2:15	304	102	0	406	0	0	0	0	0	110	8	118	3	0	339	342	866
1:30-2:30	302	107	0	409	0	0	0	0	0	98	5	103	4	0	322	326	838
Peak Volumes:	356	90	0	446	0	0	0	0	0	151	11	162	8	0	424	432	1,040
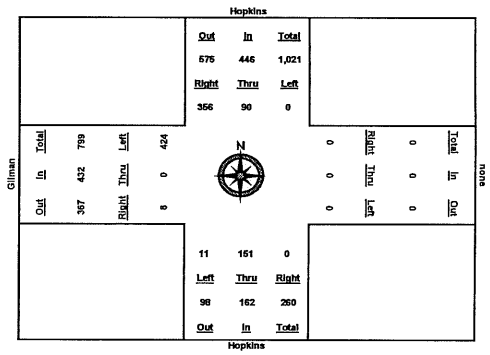
Cut and Paste	NBL	NBT	NBR	SBL	SBT	SBR	EBL	EBT	EBR	WBL	WBT	WBR
	11	151	0	0	90	356	424	0	8	0	0	0