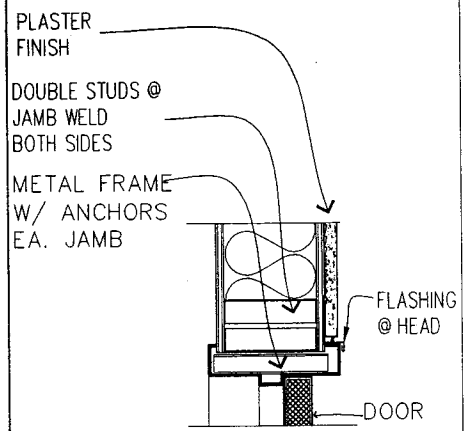

SERVICE DOOR JAMB/HEAD SIM

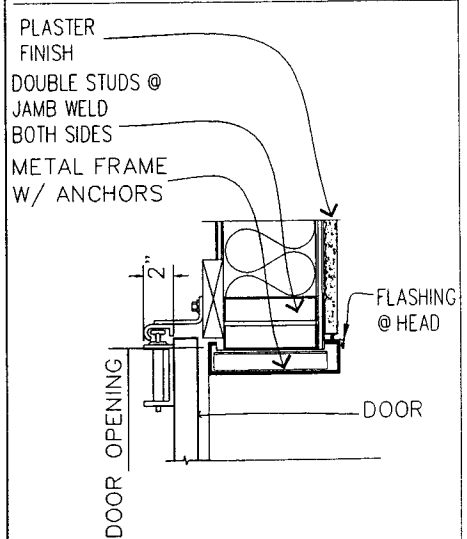

OVERHEAD DOOR JAMB/HEAD SIM

ROOF RIDGE

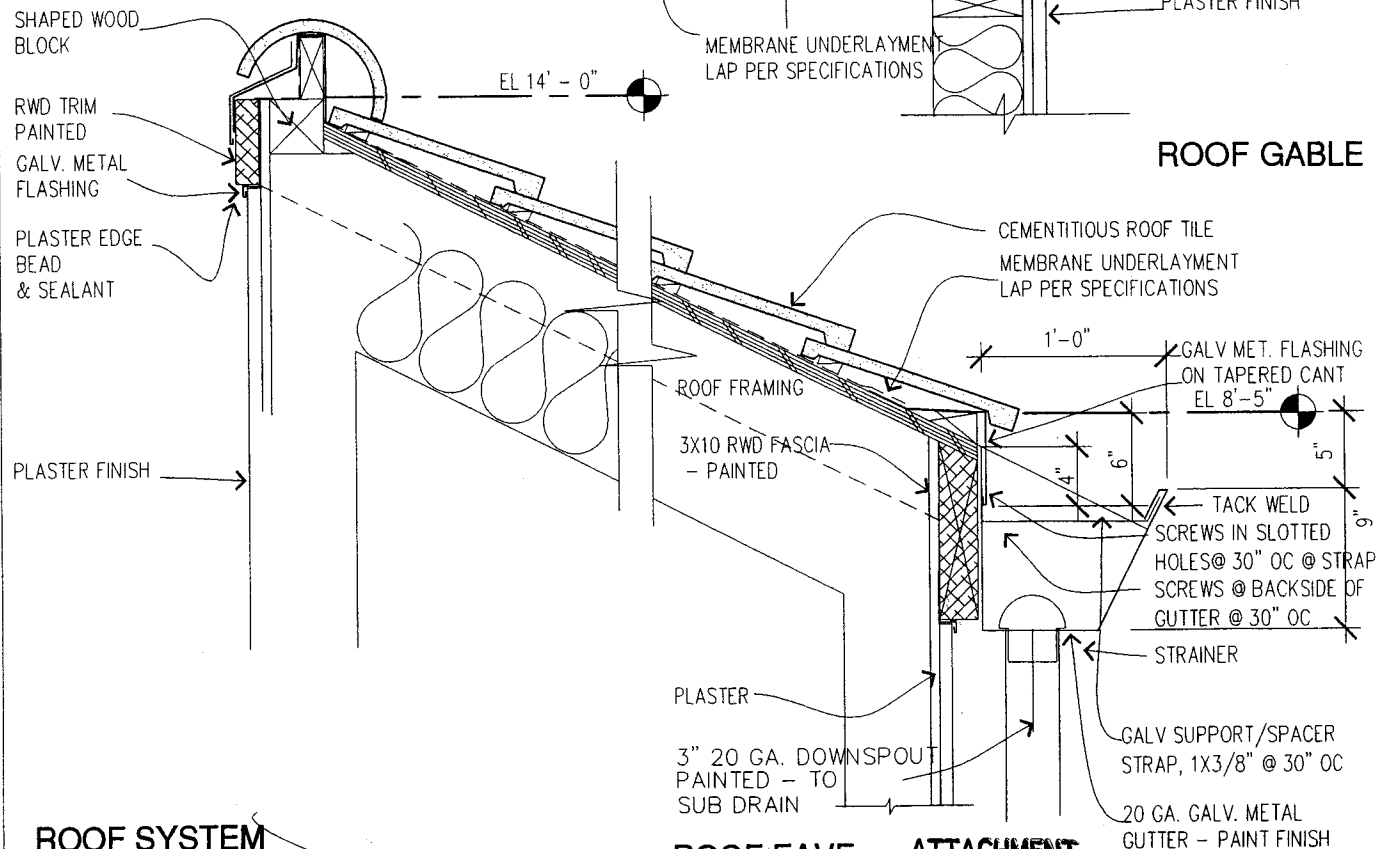

ROOF GABLE

ROOF EAVE

ROOF SYSTEM CONCEPTUAL DETAILS

ATTACHMENT G-1

LICENSED ARCHITECT
STATE OF CALIFORNIA

DRAF

Revisions
No. Date Description

DAHANUKAR BRANDES ARCHITECTS
ARCHITECTURE PLANNING INTERIOR DESIGN
907 GREENHILL ROAD, MILL VALLEY, CA 94941

DESIGN REVIEW - OCTOBER 04, 2007
SAINT MARY'S COLLEGE HIGH SCHOOL
ATHLETIC FIELD RENOVATION

STORAGI
BUILDING
CONCEPTUAL DE

AS NOTED
OCT 4, 2007