VALERY RESIDENCE
HOUSE ADDITION & REMODEL

1037 CURTIS ST.
ALBANY, CA 94706

GENERAL NOTES

THESE NOTES APPLY TO THE "S" SERIES OF STRUCTURAL DRAWINGS LISTED ON THIS SHEET.

ALL WORK SHALL COMPLY WITH THE DRAWINGS AND AS WELL AS, THE MINIMUM REQUIREMENTS OF THE 2010 CALIFORNIA BUILDING CODE (CBC).

NOTES, TYPICAL DETAILS AND SCHEDULES APPLY TO ALL DRAWINGS UNLESS OTHERWISE SHOWN, NOTED OR SPECIFIED.

WHERE DIMENSIONS ARE NOT INFERABLE FROM THE FRAMING PLAN AND FRAME ELEVATION DRAWINGS, CONTRACTOR MAY SCALE THE DRAWINGS ONLY TO ESTIMATE THE LENGTH OF MEMBERS. DRAWINGS SHALL NOT BE SCALED FOR THE PURPOSE OF PREPARING SHOP DRAWINGS OR CONSTRUCTION.

DETAILS OF THE CONSTRUCTION NOT FULLY SHOWN OR NOTED ON THE DRAWINGS SHALL BE OF THE SAME SIZE AND CHARACTER AS FOR SIMILAR CONDITIONS WHICH ARE SHOWN AND NOTED, SUBJECT TO REVIEW AND APPROVAL BY THE OWNER'S REPRESENTATIVE.

THE CONTRACTOR SHALL VERIFY ALL EXISTING CONDITIONS AND DIMENSIONS AT JOB SITE. THE CONTRACTOR SHALL COMPARE STRUCTURAL DRAWINGS WITH EXISTING CONDITIONS AND WITH ARCHITECTURAL, CIVIL, LANDSCAPE, MECHANICAL, PLUMBING AND ELECTRICAL DRAWINGS BEFORE COMMENCING WITH THE WORK, AND SHALL NOTIFY THE OWNER'S REPRESENTATIVE OF ANY DISCREPANCIES REQUIRING CLARIFICATION OR REVISION. DO NOT SCALE STRUCTURAL DRAWINGS. CONTACT OWNER'S REPRESENTATIVE FOR CLARIFICATION.

WHERE A SPECIAL SEQUENCE OF CONSTRUCTION IS REQUIRED FOR STRUCTURAL STABILITY AND SAFETY, THE CONTRACTOR SHALL OBSERVE THE SEQUENCE CALLED FOR IN THE DRAWINGS AND/OR SPECIFICATIONS, AND THE INSTRUCTIONS OF THE OWNER'S REPRESENTATIVE.

NOTES, TYPICAL DETAILS AND SCHEDULES APPLY TO ALL DRAWINGS AND GOVERN UNLESS OTHERWISE SHOWN, NOTED OR SPECIFIED.

FOR PROPER FIELD OBSERVATION BY THE STRUCTURAL ENGINEER, THE STRUCTURAL ENGINEER SHALL BE NOTIFIED OF THE VARIOUS CONSTRUCTION PHASES.

OBSERVATION VISITS TO THE JOB SITE BY THE ENGINEER'S FIELD REPRESENTATIVE SHALL BE CONSTRUED AS NEITHER INSPECTION NOR APPROVAL OF CONSTRUCTION.

THE CONTRACTOR SHALL BE RESPONSIBLE FOR BRACING AND SHORING THE PARTIALLY COMPLETED PORTIONS OF WORK.

NO OPENINGS, CHASES, NOTCHES, ETC. SHALL BE PLACED IN COLUMNS, JOISTS, BEAMS, BEARING WALLS AND SHEARWALLS UNLESS PECIFICALLY NOTED ON THESE DRAWINGS. THE CONTRACTOR SHALL NOTIFY THE STRUCTURAL ENGINEER WHEN DRAWINGS BY OTHERS SHOW SUCH OPENINGS.

ABBREVIATIONS

&	AND
@	AT
A.B.	ANCHOR BOLT
BM.	BEAM
BOT.	BOTTOM
B.O.	BOTTOM OF
℄	CENTER LINE
COL.	COLUMN
CONT.	CONTINUOUS
CLR	CLEAR
CONC	CONCRETE
CONN	CONNECTION
DET.	DETAIL
D.F.	DOUGLAS FIR
D.S.	DRAG STRUT
(E)	EXISTING
EXT	EXTERIOR
FL.	FLOOR
FTG.	FOOTING
FT	FEET
FLR	FLOOR
GALV	GALVANIZE
GA	GAUGE
GR	GRADE
N.T.S.	NOT TO SCALE
NO.	NUMBER
O.C.	ON CENTER
OPP.	OPPOSITE
O.H.	OPPOSITE HAND
O.D.	OUTSIDE DIAMETER
PL	PLATE
PLY.	PLYWOOD
P.T.	PRESSURE OR PRESERVATIVE TREATED
REINF.	REINFORCEMENT
REQ'D	REQUIRED
REV	REVISED OR REVISION
SQ.	SQUARE
SF	SQUARE FEET
STAGG	STAGGERED
STD	STANDARD
STL	STEEL
STIFF	STIFFENER
STRUCT	STRUCTURAL
S.W.	SHEAR WALL
T&B	TOP AND BOTTOM
T&G	TONGUE AND GROOVE

VICINITY MAP

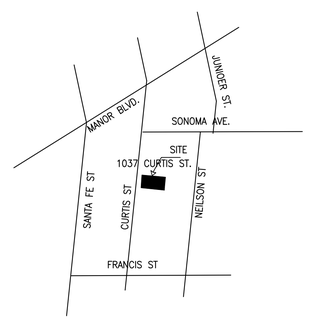

NORTH

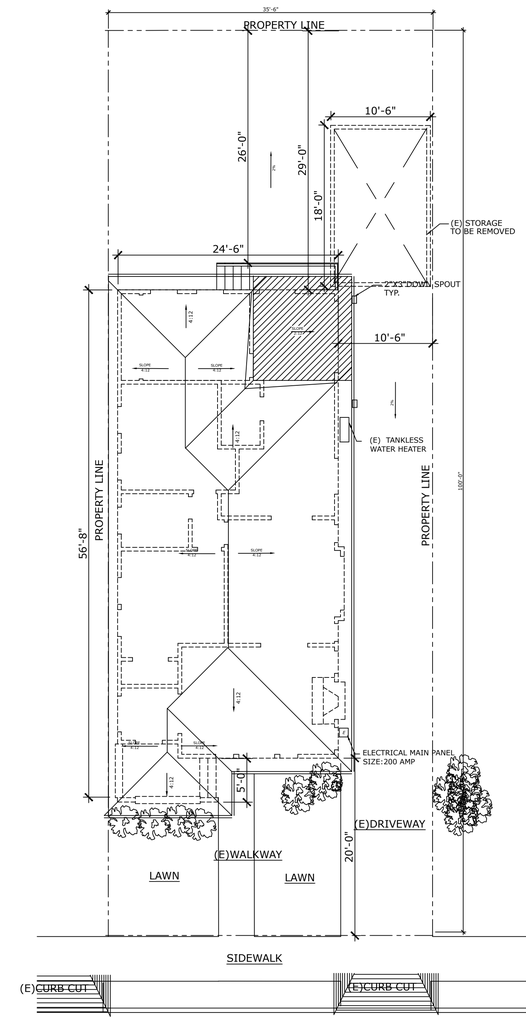

CURTIS STREET

PROVIDE A MINIMUM 5% GRADE SLOPE AWAY FROM FOUNDATION FOR MINIMUM DISTANCE OF 10 FEET MEASURED PERPENDICULAR TO THE FACE OF THE EXCEPTION:
a. IF BUILDING SITE DOES NOT ALLOW 10 FEET OF SLOPE INDICATE THE INSTALLATION OF DRAINS OR SWALES TO ENSURE DRAINAGE AWAY FROM THE S
b. IMPERVIOUE SURFACES WITHIN 10 FEET OF THE BUILDING FOUNDATION SHALL BE SLOPED A MINIMUM OF 2% AWAY FROM THE BUILDING.

1 SITE PLAN
SCALE: 1/8"=1'-0"

NORTH

GOVERNING CODES ('Code')

		City Ordinance
California Fire Code	2013 Edition	#24-2013
California Building Code	2013 Edition	#24-2013
California Residential Code	2013 Edition	#23-2013
California Mechanical Code	2013 Edition	#23-2013
California Plumbing Code	2013 Edition	#23-2013
California Electrical Code	2013 Edition	#23-2013
Energy Efficiency Standards	(Title 24)	
Albany Municipal Code		

SPECIAL INSPECTIONS

Epoxy anchor bolts and epoxy hold-down bolts

PROJECT DIRECTORY

Owner
VALERY KARPEI
15039 JUNIPER STREET
1035 CURTIS ST
ALBANY, CA 94706

Civil Engineer
KEVIN G. WANG
1574 SISKIYOU DR.
WALNUT CREEK, CA 94598
(510) 304-9812 Business
gsengineering2000@gmail.com

AREA CALCULATIONS

ITEM	EXISTING	PROPOSED
LOT AREA (sf)	3,500SF	NO CHANGE
NUMBER OF UNITS	1 UNIT	NO CHANGE
BLDG SQUARE FOOTAGE	1,193 SF	1,289 SF
STORIES	1	NO CHANGE
BUILDING HEIGHT	16'-8"	NO CHANGE
BUILDING DEPTH	56'-8"	NO CHANGE

NEW ADDITION AREA: 96 SF
FLOOR AREA RATIO: 36.8%
LOT COVERAGE: 38.7%

BUILDING DATA

ADDRESS:
1035 CURTIS ST
ALBANY, CA 94706
APN:
ZONING CODE: R1-5
TYPE OF CONSTRUCTION: V-B
STORIES: 1
BASEMENTS: 0

UNITS: 1
USE: RESIDENTIAL DWELLING
OCCUPANCY: R-3/U
YEAR BUILT:
SPRINKLERS: NO

SCOPE OF WORK

1. DEMOLISH EXISTING STORAGE IN THE BACK YARD
2. ADD ONE PLAY ROOM AND OUTDOOR WOOD LANDING IN THE BACK YARD. NEW LIVING ADDITION AREA IS 96 SF.
3. ADD ONE FULL BATHROOM IN THE EXISTING KITCHEN & HALLWAY AREA.

SHEET INDEX

A1.0 TITLE SHEET AND SITE PLAN
A2.0 EXISTING/PROPOSED FLOOR PLAN AND ELECTRICAL PLAN
A2.1 EXISTING/PROPOSED ROOF PLANS
A3.0 EXISTING/PROPOSED RIGHT & REAR ELEVATIONS
A4.0 BUILDING SECTION & DETAILS
S1.0 GENERAL NOTES
S1.1 TYPICAL DETAILS
S2.0 PROPOSED FOUNDATION/FIRST FLOOR FRAMING PLAN
ROOF FRAMING PLAN
S3.0 DETAILS
TITLE-24

CIVIL ENGINEER
G.S. ENGINEERING
1574 SISKIYOU DRIVE
WALNUT CREEK, CA 94598
Tel: (510)304-9812
Email: gsengineering2000@gmail.com

PROJECT
KARPEI RESIDENCE
HOUSE ADDITION & REMODEL
1037 CURTIS AVE
ALBANY, CA 94706

PROJECT NO
16-30

REGISTERED PROFESSIONAL ENGINEER
GUANGSHENG WANG
C 77916
EXP 6-30-2017
CIVIL
STATE OF CALIFORNIA

PLANS SUBMITTAL

SHEET CONTENTS
TITLE SHEET, SITE PLAN

SHEET NUMBER
A1.0

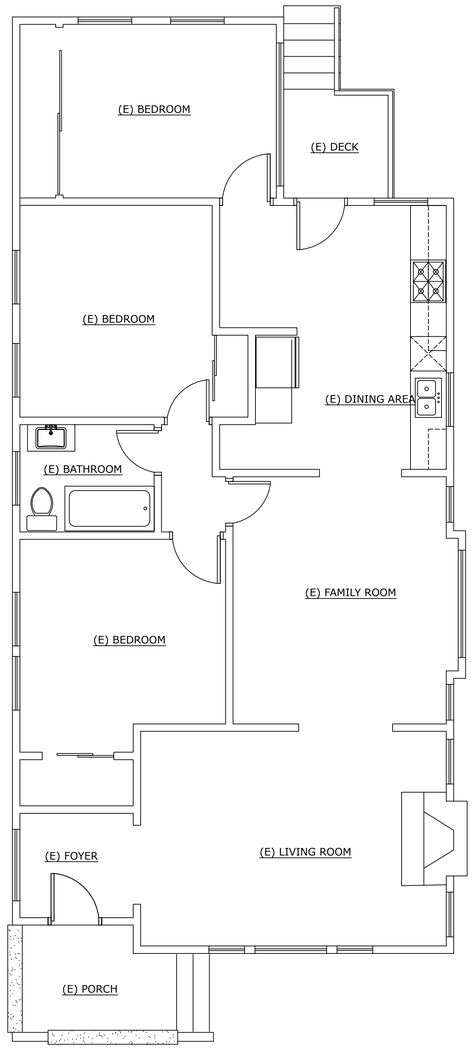

2 EXISTING FLOOR PLAN

SCALE: 3/16" = 1'-0"

NORTH

ELECTRICAL LEGEND:

- EXHAUST FAN
- EXHAUST FAN/LIGHT, HIGH EFFICIENCY LIGHTING
- AFCI — DUPLEX OUTLET W/ARC-FAULT CIRCUIT INTERRUPTER
- GFCI — DUPLEX OUTLET W/ GROUND FAULT INTERRUPTION
- WP GFCI — WATER PROOF DUPLEX OUTLET W/ GROUND FAULT INTERRUPTION
- 120 / 240V OUTLET
- RECESSED LIGHT, HIGH EFFICIENCY LIGHTING (IC RATED, ELECTRONIC BALLAST AND AIR-TIGHT)
- $ — HIGH EFFICIFNCY LIGHT SWITCH
- $EDS — ELECTRICAL DEVICE SWITCH
- L — LIGHT, CEILING MOUNT, HIGH EFFICIENCY LIGHTING
- WIRING
- L — LIGHT, WALL MOUNT, HIGH EFFICIENCY LIGHTING
- SD — INTERCONNECTED 110 V SMOKE DETECTOR w/BATTERY BACKUP
- "KIDDE HARDWIRE INTERCONNECTABLE 120-VOLT CARBON MONOXIDE ALARM WITH DIGITAL DISPLAY AND BATTERY BACKUP" MODEL#KN-COP-IC, UL LISTED PRODUCTS
- PENDENT LIGHT, HIGH EFFICIENCY LIGHTING

LEGEND:

- PROPOSED STUD WALL (2 x 4@ 16 O.C.)
- EXISTING WALL
- DEMO WALL
- UNDER-FLOOR HEAT REGISTER 5"X14"

a. A MINIMUM OF TWO 20 AMP SMALL APPLIANCE BRANCH CIRCUITS SHALL BE PROVIDED FOR ALL RECEPTACLE OUTLETS IN THE KITCHEN, DINNING ROOM, PANTRY, OR OTHER SIMILAR AREAS.
b. AT LEAST ONE 20 AMP BRANCH CIRCUIT SHALL BE PROVIDED TO SUPPLY LAUNDRY RECEPTACLE OUTLETS. SUCH CIRCUITS SHALL HAVE NO OTHER OUTLETS.
c. AT LEAST ONE 20 AMP BRANCH CIRCUIT SHALL BE PROVIDED TO SUPPLY BATHROOM RECEPTACLE OUTLETS. SUCH CIRCUIT SHALL HAVE NO OTHER OUTLETS.
d. IN EVERY DWELLING UNIT, FIXED APPLIANCES SUCH AS FOOD WASTE GRINDERS, DISHWASHERS, WASHING MACHINES, DRYERS, LAUNDRY TRAY LOCATIONS, BUILT-IN REFRIGERATORS OR FREEZERS, FURNACES, AC UNITS, BUILT-IN HEATERS OR ANY OTHER FIXED APPLIANCES WITH A MOTOR OF M-<H.P. OR LARGER SHALL BE ON A SEPARATE 20 AMP. BRANCH CIRCUIT.
e. 125- AND 250-VOLT RECEPTACLES INSTALLED OUTDOORS IN A WET LOCATION SHALL HAVE AN ENCLOSURE THAT IS WEATHERPROOF WHETHER OR NOT THE ATTACHMENT PLUG CAP IS INSERTED.
f. ALL BRANCH CIRCUITS THAT SUPPLYING RECEPTACLES IN FAMILY ROOMS, DINING ROOMS, LIVING ROOMS, PARLORS, BEDROOMS, SUNROOMS, RECREATION ROOMS, CLOSETS, HALLWAYS AND SIMILAR ROOMS OR AREAS SHALL BE PROTECTED BY A LISTED ARC-FAULT CIRCUIT INTERRUPTER.

g. ALL RECEPTACLES IN BATHROOMS, GARAGES, ACCESSORY, BUILDINGS, OUTDOORS, CRAWL SPACES, UNFINISHED BASEMENTS, KITCHENS(WHERE RECEPTACLES SERVE COUNTER TOP SURFACES), LAUNDRY, UTILITY, WET BAR SINKS(WITHIN 6 FEET OF THE EDGE OF THE SINK), SHALL HAVE GROUND-FAULT CIRCUIT INTERRUPTER(GFCI) PROTECTION.
h. KITCHEN LIGHTING: (A) AT LEAST 50% OF THE INSTALLED WATTAGE WILL BE HIGH EFFICACY FIXTURES. (B) HIGH EFFICACY LIGHTING MUST BE SWITCHED SEPARATELY FROM LOW EFFICACY LIGHTING.
K. BATHROOM LIGHTING: ALL BATHROOMS HAVE HIGH EFFICACY LIGHTING, OR ARE PROVIDED WITH A MANUAL-ON MOTION SENSOR. IF THE MANUAL-ON MOTION SENSOR IS PROVIDED, IT SHOULD FURTHER BE INDICATED TO TURN-OFF AUTOMATICALLY WHEN NO ONE IS PRESENT AND BE CAPABLE OF BEING TURNED ON MANUALLY WITH A SWITCH. GARAGE LIGHTING SHALL BE EFFICACY.
I. OTHER AREAS OF THE HOME(I.E. BEDROOMS, HALLWAYS, DINING AREA, ETC.) MUST ALSO HAVE HIGH EFFICACY LIGHTING, OR BE PROVIDED WITH A MANUAL-ON SENSOR OR DIMMER SWITCH. THE MAUUAL-ON MOTION SENSOR MUST TURN-OFF AUTOMATICALLY WHEN NO ONE IS PRESENT WITHIN THE ROOM AND BE CAPABLE OF BEING TURNED ON MANUALLY WITH A SWITCH. THE CLOSET LESS THAN 70-SQ.FT. ARE EXEMPT FROM LIGHTING REQUIREMENTS.
m. OUTDOOR LIGHTING: OUTDOOR LIGHTING ATTACHED THE BUILDING, MUST BE HIGH EFFICACY, OR CONTROLLED BE BOTH MOTION SENSOR AND PHOTO-CONTROL DEVICES. NOTE THAT LIGHTING NOT ATTACHED TO THE BUILDING (I.E. LANDSCAPER LIGHTING) IS EXEMPT.

NOTES:
1. MAX. 1.28 GALLON PER FLUSH FOR ULTRA-LOW FLUSH TOILETS AT ALL BATHROOMS
2. PLUMBING: THE MAXIMUM FLOW RATES
   WATER CLOSETS 1.28 GPM, SHOWER HEADS 2.5GPM, SINK FAUCETS 2.2 GPM
3. USE 'DUROCK' 3'X5'X½" CEMENT BOARD SUBSTRATE FOR 8"X16" GLAZED WALL TILE SURROUNDING THE BATH TUB AND SHOWER SPACE WALLS.
4. DUCTS PENETRATING THE WALLS OR CEILINGS SEPARATING THE DWELLING UNIT FROM THE GARAGE SHALL BE CONSTRUCTED OF MINIMUM 26 GAGE SHEET STEEL.
5. MECHANICAL NOTES
   a. DUCTS FOR ACCESS TO AREAS OF THE CRAWL SPACE A MINIMUM VERTICAL CLEARANCE OF EIGHTEEN INCHES SHALL BE PROVIDED.
   b. SINGLE-WALL METAL PIPE SHALL NOT BE USED AS A VENT IN DWELLINGS AND RESIDENTIAL OCCUPANCIES PER CMC.
6. a. SHOWER AND/OR TUB/SHOWER WALLS SHALL HAVE A SMOOTH, HARD, NONABSORBENT SURFACE(e.g., CERAMIC TILE, FIBERGLASS, etc.) OVER A MOISTURE RESISTANT UNDERLAYMENT (e.g., WATER RESISTANT GYPSUM BOARD, GREEN BOARD, etc.) TO A HEIGHT OF 72" ABOVE THE FLOOR /DRAIN INLET.
   b. SHOWER AND TUB-SHOWER COMBINATIONS SHALL BE PROVIDED WITH INDIVIDUAL CONTROL OF PRESSURE BALANCE OR THE THERMOSTATIC MIXING VALVE TYPE.
7. THE FIREPLACE WILL HAVE A SPARK ARRESTOR INSTALLED
8. ADDRESS NUMBERS NEED TO CONTRAST WITH THEIR BACKGROUND, AND BE A MINIMUM OF 4" HIGH, WITH A MINIMUM STROKE OF ½".
9. SILL HEIGHT OF ALL BEDROOM WINDOWS IS 36" ABOVE THE FINISH FLOOR.

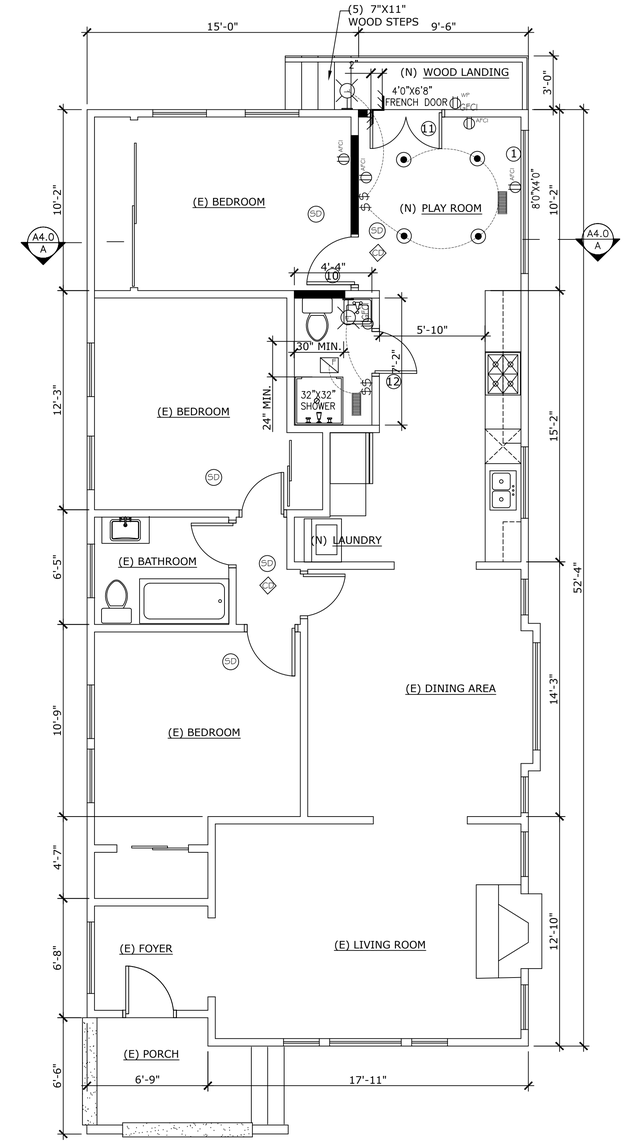

1 PROPOSED FLOOR PLAN

SCALE: 3/16" = 1'-0"

NORTH

CIVIL ENGINEER
G.S. ENGINEERING
1574 SISKIYOU DRIVE
WALNUT CREEK, CA 94598
Tel: (510)304-9812
Email: gsengineering2000@gmail.com

PROJECT
KARPEI RESIDENCE
HOUSE ADDITION & REMODEL
1037 CURTIS AVE
ALBANY, CA 94706

PROJECT NO
16-30

REGISTERED PROFESSIONAL ENGINEER
GUANGSHENG WANG
C 77916
EXP 6-30-2017
CIVIL
STATE OF CALIFORNIA

PLANS SUBMITTAL

SHEET CONTENTS
EXISTING FLOOR PLAN & PROPOSED FLOOR PLAN

SHEET NUMBER
A2.0

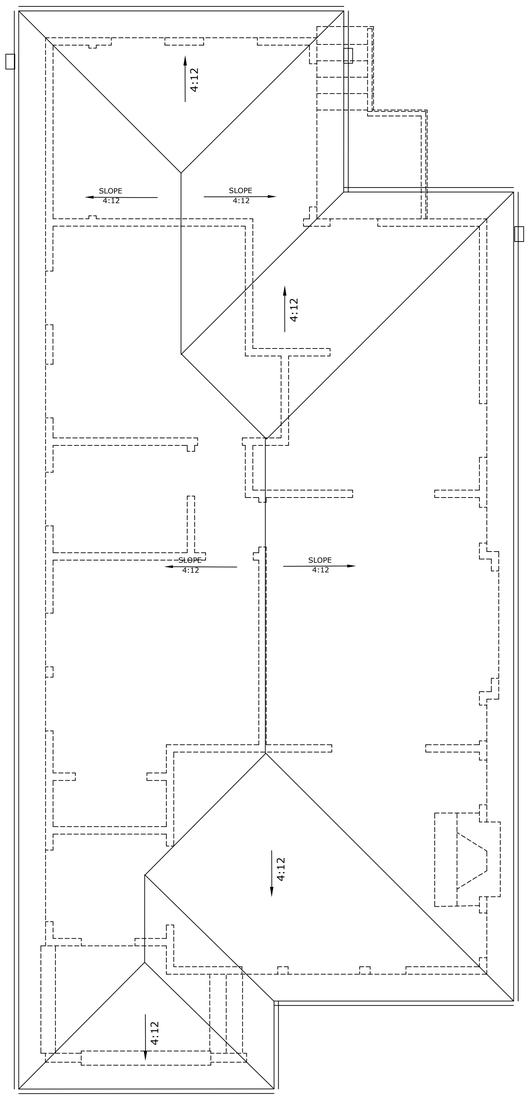

1 EXISTING ROOF PLAN
SCALE: 1/4" = 1'-0"

NORTH

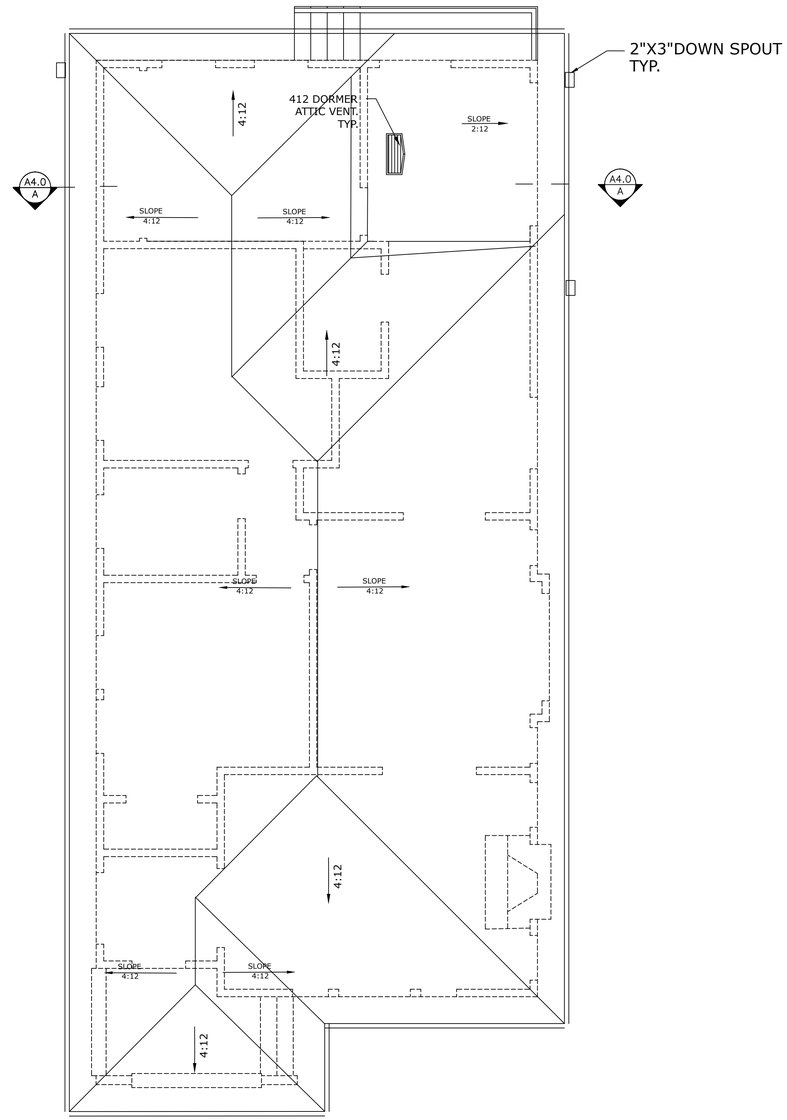

2 PROPOSED ROOF PLAN
SCALE: 1/4" = 1'-0"

NORTH

CIVIL ENGINEER
G.S. ENGINEERING
1574 SISKIYOU DRIVE
WALNUT CREEK, CA 94598
Tel: (510)304-9812
Email: gsengineering2000@gmail.com

PROJECT
KARPEI RESIDENCE
HOUSE ADDITION & REMODEL
1037 CURTIS AVE
ALBANY, CA 94706

PROJECT NO
16-30

REGISTERED PROFESSIONAL ENGINEER
GUANGSHENG WANG
C 77916
EXP 6-30-2017
CIVIL
STATE OF CALIFORNIA

PLANS SUBMITTAL

SHEET CONTENTS
PROPOSED SECOND FLOOR PLAN

SHEET NUMBER
A2.1

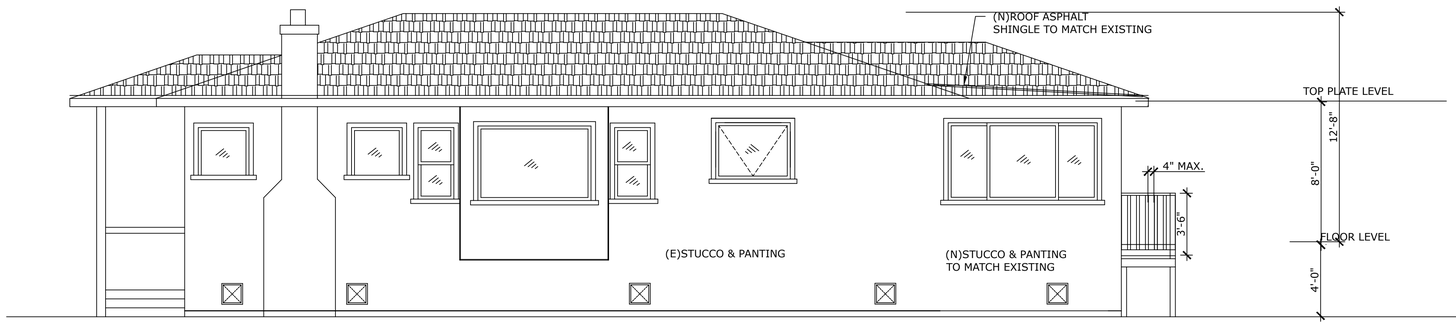

3 — PROPOSED RIGHT ELEVATION

SCALE: 1/4" = 1'-0"

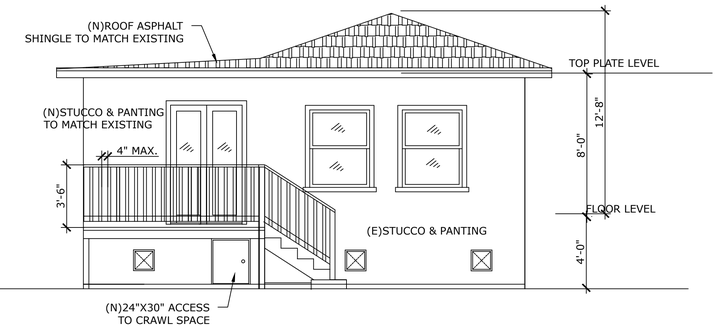

1 — PROPOSED REAR ELEVATION

SCALE: 1/4" = 1'-0"

EXTERIOR WALL:

7/8" THINK 3 COATS STUCCO
O/METAL LATH

2 LAYERS GRADE "D" PAPER
O/CDX 1/2" PLYWOOD SHEATHING

26 GA. GALV. CORROSION-RESISTANT
WEEP SCREED.
VERTICAL ATTACHMENT FLANGE
OF 4" MIN.

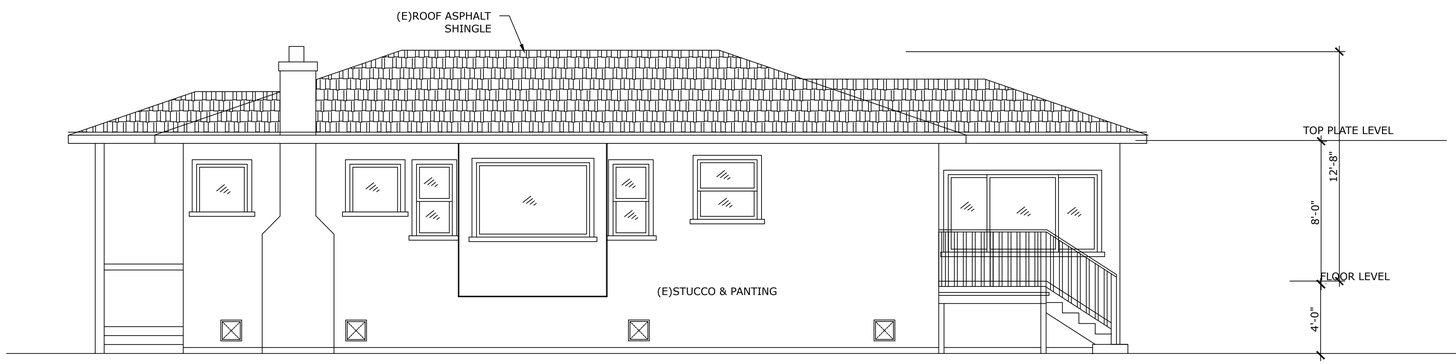

4 — EXISTING RIGHT ELEVATION

SCALE: 1/4" = 1'-0"

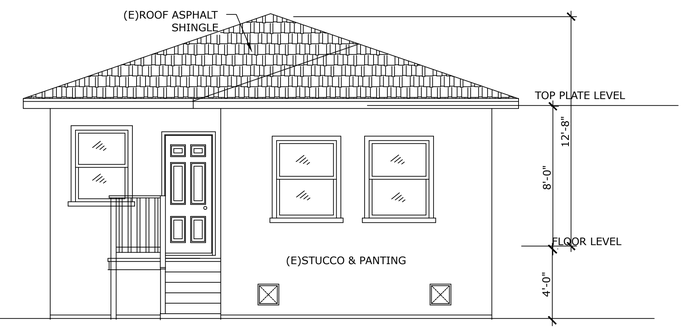

2 — EXISTING REAR ELEVATION

SCALE: 1/4" = 1'-0"

CIVIL ENGINEER

G.S. ENGINEERING
1574 SISKIYOU DRIVE
WALNUT CREEK, CA 94598
Tel: (510)304-9812
Email: gsengineering2000@gmail.com

PROJECT

KARPEI RESIDENCE
HOUSE ADDITION & REMODEL

1037 CURTIS AVE
ALBANY, CA 94706

PROJECT NO
16-30

REGISTERED PROFESSIONAL ENGINEER
GUANGSHENG WANG
C 77916
EXP 6-30-2017
CIVIL
STATE OF CALIFORNIA

PLANS SUBMITTAL

SHEET CONTENTS

EXISTING/PROPOSED RIGHT & REAR ELEVATIONS

SHEET NUMBER

A3.0

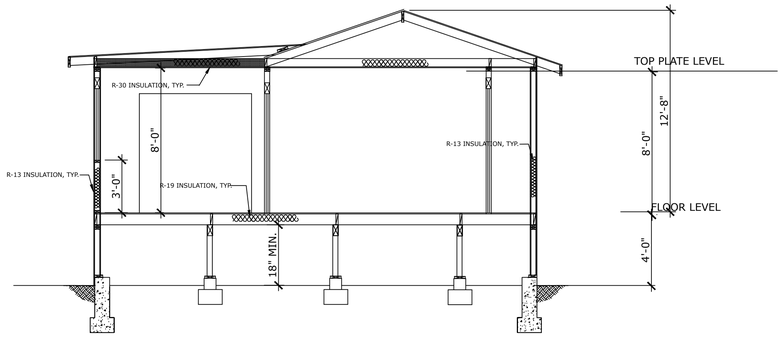

5 — SECTION A–A

SCALE: 1/4" = 1'–0"

NEW WINDOW SCHEDULE			
	SIZE		
MARK	WIDTH	HEIGHT	TYPE
1	8'-0"	4'-0"	SLIDERS

DOOR SCHEDULE		
MARK	SIZE	TYPE
10	2'-8" X 6'-8"	SINGLE FLUSH DOOR
11	4'-0" X 6'-8"	FRENCH DOORS
12	2'-6" X 6'-8"	SINGLE FLUSH DOOR

NEW ADDITION ATTIC VENT.

NEW ADDITION VENT. REQ'D:
96X144/150=92 S.I.
VENT PROVIDED(PER CRC R806.2)
USE (3) 2½"ø HOLES PER BLOCK
10/2'=5 5x14.72 S.I.=73 S.I.
92 S.I. + 60 S.I.(EXISTING AIR VENT. AREA BLOCKED)=152 S.I.
(1)–412 ROOF DORMER SCREEN VENT. 26 GAUGE GALV.
27.5"X36"X10.5" HIGH, NET FREE AREA 100 S.I.

THE TOTAL VENT. AREA: 73 S.I.+100 S.I.=173 S.I.>152 S.I. OK
SEE DETAIL 1/A4.0

NEW ADDITION UNDER–FLOOR VENT.

NEW ADDITION VENT. REQ'D: 96X144/150=92 S.I.
92 S.I.+ 150 S.I.(EXISTING AIR VENT. AREA BLOCKED)=242 S.I.
VENT PROVIDED:
USE (2)–12X12 VENT. SCREEN PER CRC R806.2 FOR VENT.

2X12X12=288 S.I.>242 S.I.
SEE ELEVATIONS FOR LOCATION

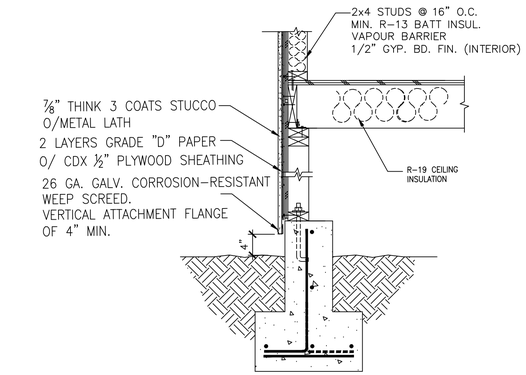

1 — TYPICAL EXTERIOR WALL DETAIL

SCALE: 1"=1'–0"

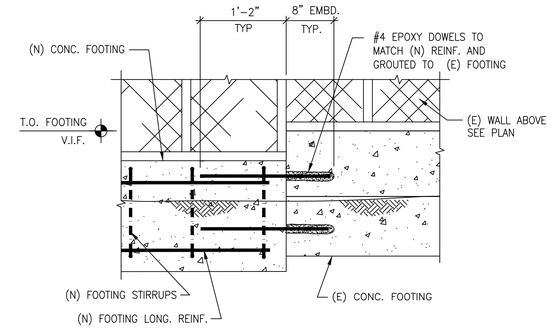

4 — NEW AND EXISTING FOOTING CONNECTION

SCALE: 1"=1'–0"

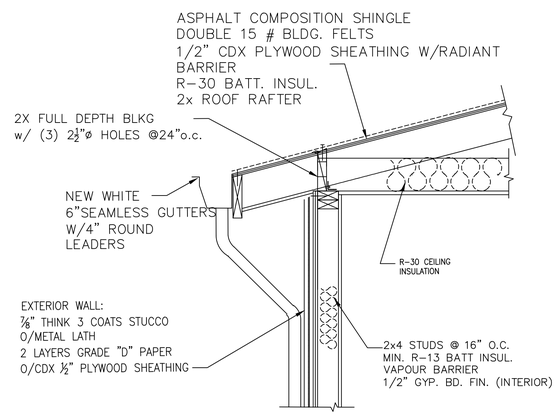

2 — TYPICAL ROOF EAVE

SCALE: 1"=1'–0"

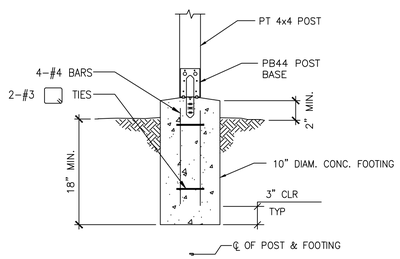

3 — DECK POST PIER

SCALE: 1"=1'–0"

CIVIL ENGINEER
G.S. ENGINEERING
1574 SISKIYOU DRIVE
WALNUT CREEK, CA 94598
Tel: (510)304-9812
Email: gsengineering2000@gmail.com

PROJECT
KARPEI RESIDENCE
HOUSE ADDITION & REMODEL
1037 CURTIS AVE
ALBANY, CA 94706

PROJECT NO
16–30

REGISTERED PROFESSIONAL ENGINEER
GUANGSHENG WANG
C 77916
EXP 6-30-2017
CIVIL
STATE OF CALIFORNIA

PLANS SUBMITTAL

SHEET CONTENTS
BUILDING SECTIONS A–A

SHEET NUMBER
A4.0

STRUCTURAL GENERAL NOTES

GENERAL

THESE NOTES APPLY TO THE "S" SERIES OF STRUCTURAL DRAWINGS LISTED ON THIS SHEET.

ALL WORK SHALL COMPLY WITH THE DRAWINGS AND AS WELL AS, THE MINIMUM REQUIREMENTS OF THE 2013 CALIFORNIA BUILDING CODE (CBC).

NOTES, TYPICAL DETAILS AND SCHEDULES APPLY TO ALL DRAWINGS UNLESS OTHERWISE SHOWN, NOTED OR SPECIFIED.

WHERE DIMENSIONS ARE NOT INFERABLE FROM THE FRAMING PLAN AND FRAME ELEVATION DRAWINGS, CONTRACTOR MAY SCALE THE DRAWINGS ONLY TO ESTIMATE THE LENGTH OF MEMBERS. DRAWINGS SHALL NOT BE SCALED FOR THE PURPOSE OF PREPARING SHOP DRAWINGS OR CONSTRUCTION.

DETAILS OF THE CONSTRUCTION NOT FULLY SHOWN OR NOTED ON THE DRAWINGS SHALL BE OF THE SAME SIZE AND CHARACTER AS FOR SIMILAR CONDITIONS WHICH ARE SHOWN AND NOTED, SUBJECT TO REVIEW AND APPROVAL BY THE OWNER'S REPRESENTATIVE.

THE CONTRACTOR SHALL VERIFY ALL EXISTING CONDITIONS AND DIMENSIONS AT JOB SITE. THE CONTRACTOR SHALL COMPARE STRUCTURAL DRAWINGS WITH EXISTING CONDITIONS AND WITH ARCHITECTURAL, CIVIL, LANDSCAPE, MECHANICAL, PLUMBING AND ELECTRICAL DRAWINGS BEFORE COMMENCING WITH THE WORK, AND SHALL NOTIFY THE OWNER'S REPRESENTATIVE OF ANY DISCREPANCIES REQUIRING CLARIFICATION OR REVISION. DO NOT SCALE STRUCTURAL DRAWINGS. CONTACT OWNER'S REPRESENTATIVE FOR CLARIFICATION.

WHERE A SPECIAL SEQUENCE OF CONSTRUCTION IS REQUIRED FOR STRUCTURAL STABILITY AND SAFETY, THE CONTRACTOR SHALL OBSERVE THE SEQUENCE CALLED FOR IN THE DRAWINGS AND/OR SPECIFICATIONS, AND THE INSTRUCTIONS OF THE OWNER'S REPRESENTATIVE.

NOTES, TYPICAL DETAILS AND SCHEDULES APPLY TO ALL DRAWINGS AND GOVERN UNLESS OTHERWISE SHOWN, NOTED OR SPECIFIED.

FOR PROPER FIELD OBSERVATION BY THE STRUCTURAL ENGINEER, THE STRUCTURAL ENGINEER SHALL BE NOTIFIED OF THE VARIOUS CONSTRUCTION PHASES.

OBSERVATION VISITS TO THE JOB SITE BY THE ENGINEER'S FIELD REPRESENTATIVE SHALL BE CONSTRUED AS NEITHER INSPECTION NOR APPROVAL OF CONSTRUCTION.

THE CONTRACTOR SHALL BE RESPONSIBLE FOR BRACING AND SHORING THE PARTIALLY COMPLETED PORTIONS OF WORK.

NO OPENINGS, CHASES, NOTCHES, ETC. SHALL BE PLACED IN COLUMNS, JOISTS, BEAMS, BEARING WALLS AND SHEARWALLS UNLESS PECIFICALLY NOTED ON THESE DRAWINGS. THE CONTRACTOR SHALL NOTIFY THE STRUCTURAL ENGINEER WHEN DRAWINGS BY OTHERS SHOW SUCH OPENINGS.

EXCAVATION NOTES

PROVIDE EXCAVATION AND TEMPORARY SHORING AS REQUIRED.

SEE GEOTECHNICAL REPORT PREPARED BY ROMIG ENGINEERS, INC., GEOTECHNICAL & ENVIRONMENTAL SERVICES FOR RECOMMENDATIONS.

ALL EXCAVATIONS SHALL BE RETAINED BY A SOIL RETENTION SYSTEM AS REQ'D. THE DESIGN, INSTALLATION, MAINTENANCE, MONITORING AND REMOVAL SHALL BE THE COMPLETE AND SOLE RESPONSIBILITY OF THE CONTRACTOR.

THE CONTRACTOR SHALL COORDINATE ALL ELEMENTS OF THE SOIL RETENTION SYSTEM WITH ALL ELEMENTS OF THE PERMANENT BUILDING, EXISTING UTILITIES/CONDITIONS, ADJACENT STRUCTURES ETC.

THE CONTRACTOR SHALL PROVIDE POSITIVE PROTECTION (MAT/SHEET COVERINGS) FOR ALL EXCAVATION SLOPES TO PROTECT SLOPES FROM INSTABILITY AND DETERIORATION DUE TO RAIN, WIND, ETC.

THE CONTRACTOR SHALL PROVIDE DEWATERING SYSTEMS INCLUDING SURFACE DRAINAGE CHANNELS, SUMPS, SUMPS PUMPS, ETC., TO PROTECT ALL EXCAVATIONS FROM FLOODING.

CONSTRUCTION NOTES

PRIOR TO PROCEEDING WITH CONSTRUCTION, VERIFY EXISTING CONDITIONS OF AREAS TO RECEIVE THE WORK.

IN SLABS, SPLICES OF REINFORCING SHALL NOT BE MADE AT POINTS OF MAXIMUM STRESS WITHOUT THE APPROVAL OF THE STRUCTURAL ENGINEER. SPLICES SHALL PROVIDE SUFFICIENT LAP TO TRANSFER THE STRESSES BETWEEN BARS THROUGH BOND AND/OR SHEAR. SEE DETAIL AND SCHEDULE FOR SPLICE LENGTHS.

NO FOUNDATION OR SLABS ON GRADE SHALL BE PLACED INTO OR AGAINST SUBGRADE CONTAINING FREE WATER. SHOULD WATER HOWEVER SLIGHT, ENTER A FOUNDATION EXCAVATION AFTER SUBGRADE APPROVAL, THE SUBGRADE SHALL BE RE-INSPECTED AND APPROVED BY THE OWNER'S GEOTECHNICAL CONSULTANT AFTER A REMOVAL OF WATER.

PROVIDE TEMPORARY REMOVAL OF WATER FROM ANY SOURCE DURING CONSTRUCTION. DEWATERING SHALL BE CAREFULLY AND PROPERLY PERFORMED TO AVOID DISTURBING THE FOUNDATIONS.

PRIOR TO PLACING CONCRETE, CLEAN THE AREA ALL DEBRIS. ALL REINFORCING SHALL BE CLEANED THOROUGHLY IMMEDIATELY PRIOR TO PLACING CONCRETE. TEMPLATES SHALL BE USED TO SET ANCHOR BOLTS.

ALL FOUNDATIONS, BASEMENT WALLS AND MAT FOUNDATION CONCRETE SHALL USE ASTM C150, TYPE I CEMENT AND HAVE MINIMUM 28-DAY STRENGTH SHOWN.

FOOTINGS AND GRADE BEAMS SHALL BE CAST IN NEAT TRENCHED EXCAVATIONS (1" WIDER THAN DIMENSIONS SHOWN). IF FOOTINGS CANNOT BE CAST IN TRENCHES, FORM FOOTINGS TO DIMENSIONS SHOWN.

THE SPECIAL INSPECTION REQUIREMENTS OF SECTION 1704, 2010 CBC APPLY TO FILL AND BACKFILL OPERATIONS. FOOTING EXCAVATIONS SHALL BE INSPECTED AND APPROVED BY THE OWNER'S REPRESENTATIVE PRIOR TO PLACING REINFORCING STEEL.

SEE ARCHITECTURAL DRAWINGS FOR WATERPROOFING AND DAMPROOFING DETAILS.

PLYWOOD

WALL AND ROOF SHEATHING SHALL BE PS1, APA STRUCTURAL 1, EXTERIOR TYPE DOUGLAS FIR, GRADE C-C . ALL EXTERIOR WALLS SHALL BE PLYWOOD SHEATHED. FLOOR SHEATHING SHALL BE PS1, APA STURD-I-FLOOR, EXTERIOR TYPE, DOUGLAS FIR GRADE C-C PLUGGED.

PLYWOOD FACE GRAIN SHALL BE PERPENDICULAR TO JOISTS. BLOCK ALL UNSUPPORTED PLYWOOD SHEET EDGES WITH 2x BLOCKING, STAGGER FLOOR AND ROOF SHEET LAYOUT. MINIMUM SHEET WIDTH SHALL NOT BE LESS THAN 24 INCHES.

PLYWOOD SHEETS SHALL ABUT ALONG THE CENTERLINE OF FRAMING MEMBERS WITH NAILING NOT LESS THAN 3/8" FROM EDGE OF SHEETS AT THE FOLLOWING SPACINGS:

PLYWOOD NAILING SCHEDULE:

PLYWOOD LOCATION	PLYWOOD THICKNESS	NAIL SIZE	NAIL TYPE	NAIL SPACING EDGE/COLLECTOR	NAIL SPACING INTERMEDIATE
ROOF	5/8"	8d	COMM.	6"	12"
FLOOR	3/4"	10d	COMM.	4" (U.O.N.)	10"
NON-SHEAR WALL	1/2"	8d	COMM.	6"	12"

FIELD NAIL INTERIOR OF WOOD SHEATHED SHEARWALL WITH 8d (10d) AT 12" O.C.

ALL SHEATHING SHALL BE APPLIED DIRECTLY TO THE STUD WITH STUD SPACING NO GREATER THAN 16" O.C.

BLOCK ALL EDGES OF WOOD SHEATHED SHEARWALL.

PROVIDE 3x (OR 4x) MEMBERS (OR DOUBLE 2x TOP PLATE) AT ALL PLYWOOD EDGES FOR SHEARWALL WHERE NAILING IS EQUAL OR LESS THAN 4" O.C.

SHEARWALLS SHALL RUN AND BE CONNECTED TO UNDERSIDE OF ROOF OR FLOOR SHEATHING WITH APPROVED BLOCKING AS REQUIRED AND SHALL CONNECT WITH FLOOR OR FOUNDATION BELOW.

PLATES AND STUDS IN SHEARWALLS SHALL NOT HAVE ANY HOLES LARGER THAN 1" IN DIAMETER OR ANY NOTCHES WITHOUT THE APPROVAL OF THE STRUCTURAL ENGINEER.

ENGINEERED TIMBER

PARALLAM PSL BEAMS:

USE TRUSS JOIST MACMILLAN 2.0E PARALLAM PSL OR EQUAL WITH THE FOLLOWING MIMIMUM ALLOWABLE DESIGN STRESSES:

FLEXURAL STRESS F_b =2900 psi MODULUS OF ELASTICITY E=2.0x10^6 psi SHEAR STRESS F_v =290 psi

MICROLAM LVL BEAMS:

USE TRUSS JOIST MACMILLAN 1.9E PARALLAM OR EQUAL WITH THE FOLLOWING MIMIMUM ALLOWABLE DESIGN STRESSES:

FLEXURAL STRESS F_b =2600 psi MODULUS OF ELASTICITY E=1.9x10^6 psi SHEAR STRESS F_v =285 psi

TJI JOISTS: USE TRUSS JOIST MACMILLAN "TJI" SERIES OR EQUAL PRODUCT.

GLULAM BEAMS:

USE ANTHONY 24F-V4 GLULAM OR EQUAL WITH THE FOLLOWING MIMIMUM ALLOWABLE DESIGN STRESSES:

FLEXURAL TENSION STRESS F_b =2400 psi FLEXURAL COMPRESSION STRESS F_b =1850 psi
MODULUS OF ELASTICITY E=1.8x10^6 psi SHEAR STRESS F_v =265 psi

FABRICATION SHALL BE BY A LICENSED FABRICATOR. SUBMIT INSPECTION CERTIFICATES TO THE ARCHITECT UPON REQUEST EXCEPT INSPECTION CERTIFICATES FOR GLULAM SHALL BE SUBMITTED TO THE ARCHITECT PRIOR TO FRAME INSPECTION.

CONCRETE

ALL CONCRETE CONSTRUCTION SHALL BE PER CBC CHAPTER 19 AND IN ACCORDANCE WITH ACI 318-11 STANDARD SPECIFICATIONS FOR STRUCTURAL CONCRETE.

CONCRETE MIX SHALL MEET REQUIREMENTS OF CBC SECTION 1905, BUT SHALL MEET THESE MINIMUM CONCRETE MIX REQUIREMENTS: MAXIMUM OF 4" SLUMP. MAXIMUM WATER-CEMENT RATIO OF 0.45 FOR SLABS. CEMENT SHALL CONFORM TO ASTMC150, TYPE II (OR ENGINEERED MAXIMUM DESIGN TO STRENGTH). TYPE V CEMENT WHERE SOIL CONTAINS MORE THAN 0.2 % SULFATE CONCENTRATIONS. ALL ALTERNATE CONCRETE MIX DESIGN AND TEST STRENGTHS SHALL BE SUBMITTED TO THE STRUCTURAL ENGINEER FOR APPROVAL PRIOR TO CONSTRUCTION.

HARD ROCK AGGREGATES SHALL CONFORM TO ASTM C33. MAXIMUM NORMAL SIZE OF AGGREGATE SHALL NOT EXCEED 1½ INCHES FOR FOUNDATION CONCRETE AND 1 INCH FOR STRUCTURAL CONCRETE ABOVE THE FOUNDATION. SEE ALSO THE REQUIREMENTS IN ACI STANDARD SPECIFICATIONS. MAXIMUM NORMAL SIZE SHALL ALSO BE SELECTED SUCH THAT WORKABILITY AND PLACEABILITY OF CONCRETE ARE FACILITATED.

REINFORCEMENT SUPPORTS IN CONTACT WITH EXPOSED SURFACES SHALL BE PLASTIC TIPPED.

UNLESS NOTED OTHERWISE, MINIMUM CONCRETE CLEAR COVER TO BARS SHALL COMPLY WITH THE FOLLOWING, BUT SHALL IN NO CASE BE LESS THAN ONE BAR DIAMETER:

FOUNDATION AND TIE BEAMS (FORMED):
3" - BOTTOM
2" - TOP BARS & SIDE STIRRUPS

CONCRETE CAST AGAINST SOIL:
3" - NOT FORMED
2" - FORMED.

SLAB-ON-GRADE:
3" - BOTTOM BARS
1" - TOP BARS.

WALLS (WITH WATERPROOFING):
2" - FROM EXTERIOR FORMED SURFACE
1 1/2" - FROM INTERIOR FORMED SURFACE
CENTERED - BARS IN SINGLE CURTAIN:

COVERS SHOWN ARE CLEAR TO FACE OF REBAR CLOSEST TO SURFACE OF CONCRETE U.N.O.

ALL CONCRETE REINFORCEMENT SHALL BE DETAILED, FABRICATED, LABELED, SUPPORTED AND SPACED IN FORMS AND SECURED IN PLACE IN ACCORDANCE WITH THE PROCEDURES AND REQUIREMENTS OUTLINED IN THE LATEST EDITION OF THE "BUILDING CODE REQUIREMENTS FOR REINFORCED CONCRETE", ACI 318 AND THE "MANUAL OF STANDARD PRACTICE FOR DETAILING REINFORCED CONCRETE STRUCTURES", ACI 315 AND 2010 CBC AND THE LOCAL BUILDING CODES.

ALL REINFORCING SPLICES SHALL CONFORM TO THE MINIMUM REQUIREMENTS OF THE 2010 CBC, UNLESS NOTED OTHERWISE.

NO CALCIUM CHLORIDE SHALL BE USED IN ANY CONCRETE. CONSTITUENT OR ADMIXTURE.

ALL CONSTRUCTION JOINTS SHALL BE WIRE BRUSHED AND CLEANED, PRIOR TO POURING ADJACENT SECTIONS OF CONCRETE. CONSTRUCTION JOINTS SHALL BE LOCATED WHERE SHOWN, AND IF NOT SHOWN, WHERE DIRECTED BY THE OWNER REPRESENTATION. THEY SHALL BE LOCATED SO AS TO LEAST IMPAIR THE STRENGTH OF THE STRUCTURE AND TO MINIMIZE THE SHRINKAGE. PROVED DOWELS AND KEYS AS DETAILED AND DIRECTED.

ANCHOR BOLTS, STRAP ANCHORS, DOWELS, REINFORCING BARS, AND OTHER INSERTS SHALL BE SET AND SECURELY FASTENED PRIOR TO POURING CONCRETE.

USE THE FOLLOWING MATERIAL PROPERTIES U.N.O.

NORMAL WEIGHT CONCRETE: FOOTINGS; 2,500 PSI — WALLS; 2,500 PSI
CONCRETE SLABS; 2,500 PSI — LEAN CONCRETE; 2,000 PSI

ALL REINFORCEMENT BAR LAPS, ANCHORAGES, SPLICES, BENDS, AND OTHER DETAILS SHALL BE IN CONFORMANCE WITH ACI-318, BUT IN NO CASE SHALL LAPS AND SPLICES BE LESS THAN 36 BAR DIAMETERS. UNLESS OTHERWISE NOTED, LOCATIONS OF LAPS AND SPLICES SHALL BE IN ACCORDANCE WITH CONSTRUCTION JOINT LOCATIONS, DETAILS AND SHALL BE SHOWN ON THE REINFORCING SHOP DRAWINGS.

ALL HORIZONTAL WALL AND WALL FOOTING REINFORCEMENTS SHALL BEND AROUND ALL CORNERS AND EXTEND 36 BAR DIAMETERS UNLESS NOTED OTHERWISE.

THE CONCRETE CONTRACTOR SHALL BE RESPONSIBLE FOR ALL POUR SEQUENCES AND CONSTRUCTION PROCEDURES FOR ALL CONCRETE WORK TO ACCOUNT FOR TEMPERATURE DIFFERENTIALS AND SHRINKAGE OCCURING DURING THE CONSTRUCTION PHASE UNTIL THE BUILDING IS PERMANENTLY IN A MECHANICALLY CONTROLLED ENVIRONMENT.

THE CONCRETE SHALL CONTAIN AN ACCEPTABLE WATER REDUCING, PLASTICIZING ADMIXTURE. NO CALCIUM CHLORIDE SHALL BE USED IN ANY CONCRETE WITHOUT PRIOR APPROVAL.

ALL REINFORCING STEEL SHALL BE NEW BILLET, HOT ROLLED, DEFORMED BARS CONFORMING TO ASTM A615, GRADE 60 (MINIMUM YIELD STRENGTH OF 60 KSI).

REINFORCING BARS SHALL BE IN AS LONG LENGTHS AS PRACTICABLE AND AS DETAILED, AND SHALL BE LAPPED AT SPLICES AND CORNERS NOT LESS THAN THE LAP SPLICE LENGTH SHOWN IN THE "MINIMUM REINFORCING LAP SCHEDULE" ON THE DRAWING, UNLESS OTHERWISE SHOWN. STAGGER HORIZONTAL WALL BAR SPLICES. VERTICAL REINFORCING AT COLUMNS, PILASTERS AND WALLS SHALL BE DOWELED TO SUPPORTING FOOTINGS WITH BARS OF SAME SIZE AND SPACING AS VERTICAL REINFORCING UNLESS OTHERWISE SHOWN ON DRAWINGS. IN GENERAL, BAR SPLICES SHALL BE MADE AT POINTS OF MINIMUM STRESS. STAGGER SPLICES IN ADJACENT BARS. SPLICE NO MORE THAN 50% OF BARS AT ANY SECTION. SPLICES SHALL BE MADE AT POINTS OF MINIMUM STRESS. STAGGER SPLICES IN ADJACENT BARS.

DOWELS SHALL MATCH SIZE AND NUMBER OF MAIN REINFORCING.

SEE ARCHITECTURAL DRAWINGS FOR TYPE AND LOCATION OF ALL FLOOR AND WALL FINISHES, AND FLOOR DEPRESSIONS.

DO NOT BACKFILL AGAINST BASEMENT WALLS UNTIL THE GROUND FLOOR FRAMING AND LOWER LEVEL SLAB HAVE BEEN PLACED AND THE CONCRETE HAS ATTAINED FULL DESIGN STRENGTH. BACKFILL SHALL BE CARRIED OUT IN UNIFORM MANNER AROUND THE PERIMETER OF THE STRUCTURE TO MINIMIZE UNBALANCED LATERAL LOADING.

NOTES FOR FORMED SURFACES:

A. SEE ARCHITECTURAL DRAWINGS FOR FINISHES FOR FORMED SURFACES.
B. EXPOSED FORMED SURFACES, PAINTED OR UNPAINTED:
REMOVE FINS, PATCH TIE HOLES, AND STONE THE JOINT MARKS AND OUT-OF-PLANE SURFACES TO WITHIN 1/16" (1.5 MM) OF FLUSH. RUB WITH CARBORUNDUM STONE USING ONLY ENOUGH WATER TO DEVELOP A CEMENT PASTE FROM THE CONCRETE MORTAR AND TO PRODUCE UNIFORMLY DENSE AND SMOOTH CONCRETE.
C. EXPOSED FORMED SURFACES, SMOOTH AS-CAST FINISH:
MAINTAIN CONCRETE FREE FROM LAITANCE CAUSED BY SPILLAGE, LEAKING FORMS OR OTHER CONTAMINANTS. DO NOT ALLOW LAITANCE TO PENETRATE, STAIN OR HARDEN ON FINISHED SURFACES. DO NOT ATTEMPT SURFACE PATCHING OR CLEANING, IF REQUIRED, UNLESS ACCEPTABLE TO ARCHITECT.
D. BASEMENT AND PLANTER WALLS TO RECIEVE WATERPROOFING:
PREPARE SURFACES OF THE HOLES AND FILL WITH NON-METALLIC, NON-SHRINK GROUT OF EQUAL OR GREATER COMPRESSIVE STRENGTH PER MANUFACTURERS RECOMMENDATIONS.

SEE MECHANICAL, PLUMBING, ELECTRICAL DRAWINGS FOR ALL CONDUIT SLABS. CONDUITS SHALL BE RUN GENERALLY AT MIDBAY AND PARALLEL CONDUITS SHALL BE SPACED AT THREE DIAMETERS ON CENTER MINIMUM. CONDUIT SIZES SHALL NOT EXCEED 1/4TH OF THE SLAB THICKNESS AND SHALL BE LOCATED AT MID-THICKNESS OF THE SLAB. PREPARE AND SUBMIT TO THE ARCHITECT FOR REVIEW, LOCATION OF CONDUITS, PULL BOXES AND OTHER ITEMS EMBEDDED IN STRUCTURAL CONCRETE.

CONCRETE MASONRY

1. UNITS: LIGHT WEIGHT BLOCKS CONFORMING TO ASTM C90 GRADE N, TYPE 1, F'm=2000psi
2. REINFORCING STEEL: ASTM A615, GRADE 60. ALL NEW MASONRY TO BE REINFORCED UNLESS SPECIFICALLY MARKED NOT REINFORCED
3. WELDED BARS: ASTM A706, GRADE 60
4. MORTAR: ASTM C270, TYPE S
5. ALL CELLS SHALL BE FULLY GROUTED FOR NEW CONSTRUCTION
6. CONTINUOUS WIRE REINFORCING(JOINT REINFORCING) SHALL BE GALVANIZED FABRICATED UNITS WITH A SINGLE PAIR OF 9 GAUGE SIDE RODS AND 9 GAUGE CROSS RODS FABRICATED FROM COLD-DRAWN STEEL WIRE COMPLYING WITH ASTM A82. JOINT REINFORCING BE SPACED AT 16" o.c. VERTICALLY IN ALL MASONRY WALLS.
7. HORIZONTAL BOND BEAM AND LINTEL REINFORCING SHALL BE CONTINUOUS ACROSS VERTICAL CONTROL JOINTS. JOINT REINFORCING SHALL BE STOPPED EITHER SIDE OF VERTICAL CONTROL JOINTS.
8. REINFORCING STEEL SHALL BE SECURED IN PLACE BEFORE GROUTING STARTS.
9. TYPICAL WALL CONTROL JOINTS SEE DETAILS 11,12/S3.2
10. HIGH LIFT GROUTING IS NOT PERMITTED. LOW LIFT GROUTED CONSTRUCTION TO COMPLY WITH SECTION 2104A OF 2010 CBC. MAXIMUM LIFT IS 2'-0".
11. PROVIDE CLEAN OUT OPENINGS THROUGH THE BLOCK FACES FOR ALL CELLS AT THE BOTTOM OF EACH POUR. OPENINGS ARE TO BE MADE BEFORE THE START OF LAYING, AND SHALL BE OF SUFFICIENT SIZE TO ALLOW THROUGH CLEANING OF ALL CELLS. REMOVE ALL OVERHANGING MORTAR AND OTHER DEBRIS.
12. USE OPEN END BLOCKS AT CORNERS. PROVIDE ADDITIONAL #5 VERTICAL ANCHORAGE BAR AT CORNERS AND WALL INTERSECTIONS.
13. HORIZONTAL REINFORCING AT WALL ENDS OR WHICH DO NOT CONTINUE INTO INTERSECTING WALLS SHALL TERMINATE WITH STANDARD 90 DEGREE HOOK TURNED DOWN.
14. PLACE VERTICAL REINFORCING AT CENTER OF WALL.
15. STANDARD LAP SHALL BE THE GREATER OF 60 BAR DIAMETERS OR 24 IN.
16. PROVIDE (2) #5 CHORD BARS AT THE TOP OF ALL WALLS.

ANCHOR BOLTS

1. All new or retrofit anchor bolts shall be ASTM A-307 or A-36 all thread, and shall be embedded into sound concrete 8" min. Minimum bolt diameter shall be ⅝". At existing concrete locations, all new anchor bolts shall be epoxied in place, see epoxy anchor notes. At new concrete locations, new anchor bolts may be cast in place. New anchor bolts shall include a standard nut and flat washer.
2. All new shearwall segments shall have new anchor bolts.
3. A minimum of two anchor bolts must be contained within the boundary of each shearwall element and one at each end of pressure treated sill plate.

EPOXY ANCHORS

1. Drill holes in existing concrete 1/8" larger than dia. of dowels to a depth of 7" min. Do not drill through existing rebar.
2. Clean hole of dust with brush AND oil-free compressed air.
3. Use Simpson Strong-Tie 'SET Anchoring Epoxy' anchoring adhesive for high strength anchoring application in Masonry and concrete.

SHEARWALL SCHEDULE

TYPE	PLYWOOD	EDGE NAILING	SILL FASTENING TO CONCRETE	SILL FASTENING TO WOOD FLOOR	JOISTS OR BLKG TO TOP PLATES OF WALL
6	1/2" PLYWOOD ONE SIDE	10d @6" O.C.	5/8"ø @32" O.C.	16d @4" O.C. STAGGER	LTP4 OR A35 @16" O.C.
4	1/2" PLYWOOD ONE SIDE	10d @4" O.C.	5/8"ø @24" O.C.	16d @3" O.C. STAGGER	LTP4 OR A35 @12" O.C.
3	1/2" PLYWOOD ONE SIDE	10d @3" O.C.	5/8"ø @16" O.C. OR 3/4"ø @ 24"O.C.	SIMPSON SDS1/4 SCREW @6" O.C. EMB 3" MIN.	LTP4 OR A35 @8" O.C.
2	1/2" PLYWOOD ONE SIDE	10d @2" O.C.	3/4"ø @ 16" O.C.	SIMPSON SDS1/4 SCREW @4" O.C. EMB 3" MIN.	LTP4 OR A35 @6" O.C.
#	DENOTES DOUBLE SIDED SHEAR WALL. APPLY THE ABOVE SCHEDULED REQUIREMENTS TO EACH SIDE AND DOUBLE SILL FASTENING AND JOISTS/BLOCKING TO TOP PLATES CONNECTORS.				

NOTES:

1. THIS SCHEDULE IS BASED ON CBC SECTION 2306
2. USE COMMON NAILS FOR ALL NAILING.
3. THIS SCHEDULE SHALL APPLY TO NAILING AT ALL STUDS, AT PLYWOOD JOINTS, TOP AND BOTTOM PLATES AND BLOCKING.
4. NAILING AT INTERMEDIATE MEMBERS SHALL BE SPACED AT 12" O.C.
5. PLYWOOD SHALL BE APPLIED OVER STUDS SPACED AT 16" O.C.
6. ALL EXTERIOR FOOTING SHALL HAVE AS A MINIMUM 5/8"x10" ANCHOR BOLTS AT 48" O.C. U.N.O. IN THE TABLE ABOVE.
7. ANCHOR BOLTS SHALL BE EMBEDED 8" MIN. IN CONCRETE
8. SHEAR WALLS MORE THAN ONE VERTICAL PANEL IN HEIGHT SHALL HAVE VERTICALLY OR HORIZONTALLY STAGGERED SPLICED JOINTS AT CONTINUOUS HORIZONTAL JOINTS. THE BLOCKING SHALL BE 3x MEMBER OR THICKER.
9. FOUNDATION SILL PLATES SHALL NOT BE LESS THAN 3x MEMBER.
10. USE DOUBLE 2x RIM BOARD OR BLOCKING AT SHEAR WALLS WITH EDGE NAIL OF 4" OR LESS.
11. USE TRIPPLE 2x RIM BOARD OR BLOCKING AT SHEAR WALLS WITH EDGE NAIL OF 4" OR LESS.

CARPENTRY

ALL WOOD CONSTRUCTION SHALL BE PER CBC, CHAPTER 23.

ALL FRAMING SHALL BE DOUGLAS FIR. No. 2 GRADE OR BETTER, EXCEPT BEAMS, POSTS AND TRUSS SHALL BE No. 1 OR BETTER GRADE.

ALL STRUCTURAL LUMBER SHALL BE HAVE THE FOLLOWING MAXIMUM MOISTURE CONTENT: MC < 19%.

ALL LUMBER IN CONTACT WITH CONCRETE TO BE PRESERVATIVE TREATED.

ALL FASTENERS, ALL CONNECTORS, AND HARDWARES IN CONTACT WITH PRESSURE TREATED WOOD SHALL BE GALVANIZED WITH G185.

BOLTS SHALL BE A307 UNFINISHED MACHINE BOLTS OF SIZES SHOWN ON THE DRAWINGS. NUTS SHALL BE TIGHTENED WHEN PLACED AND RETIGHTENED BEFORE CLOSING JOB WITH FINAL CONSTRUCTION. WHERE BOLTS BEAR AGAINST WOOD, PROVIDE SQUARE PLATE WASHERS. ALL HEADS AND NUTS IN THE FOLLOWING SIZES:

BOLT SIZE	STEEL PLATE WASHERS AGAINST WOOD (EXCEPT AT SILL PLATE)
1/2" DIAM. AND 5/8" DIAM.	2" X 2" X 1/4"
3/4" DIAM. AND 7/8" DIAM.	3" X 3" X 1/4"
1" DIAM. AND 1 1/4" DIAM.	3" X 3" X 1/4"

MANUFACTURED TIMBER FASTENERS ARE INDICATED ON THE DRAWINGS USING THE SIMPSON COMPANY CATALOG DESIGNATIONS. THESE SYMBOLS ARE USED ONLY FOR IDENTIFICATION. NAILING SHALL BE N ACCORDANCE WITH MANUFACTURER'S SPECIFICATIONS, WITH A NAIL PROVIDED FOR EACH PUNCHED HOLE.

NAILS SHALL BE GALVANIZED COMMON WIRE NAILS. USE STAINLESS STEEL COMMON NAILS WHERE EXPOSED TO WEATHER. MINIMUM NAILING SHALL BE IN ACCORDANCE WITH THE 2010 CBC, SECTION 2304

ALL MEMBERS NOTED D.S., DRAG STRUT, SHALL RECEIVE EDGE NAILING.

PROVIDE THE FOLLOWING BLOCKING AND BRIDGING AS A MINIMUM, UNLESS OTHERWISE SHOWN:

2" x FULL DEPTH SOLID BLOCKING BETWEEN JOISTS OVER SUPPORTS.
2" x FULL DEPTH SOLID BLOCKING BETWEEN JOISTS OVER AND BELOW PARTITION WALLS.
2 x 3 CROSS BRIDGING AT MID-SPAN OF ALL JOISTS WHERE SPAN EXCEEDS 8'-0".
2 x 4 MIN. FLAT BLOCKING FOR PLYWOOD EDGE JOINTS. CONTINUOUS 2x STUD WIDTH HORIZONTAL BLOCKING AT STUD WALLS; PROVIDE AT MID-HEIGHT AND AT SPACING NOT TO EXCEED 8'-0", WHICHEVER IS LESS.

LAG SCREWS PER ANSI/ASME STANDARD B18.2.1 PROVIDE LEAD HOLE SAME DIAMETER AND DEPTH AS SHANK AND THEN DRILL HOLE 60% - 70% OF SHANK DIAMETER FOR THREADED PORTIONS.

ALL SHEATHING TO BE STAMPED BY THE AMERICAN PLYWOOD ASSOCIATION (APA) AND SHALL CONFORM TO THE U.S. PRODUCT STANDARD (PS 1) WITH EXTERIOR GLUE. COMPOSITE OR NON-VENEERED PANELS SHALL COMPLY WITH NATIONAL RESEARCH BOARD REPORT NER-108, SUBFLOOR ADHEDIVE: APA SPECIFICATION AFG-01. INSTALL PLYWOOD AND NON-VENEERED PANELS PER APA CONSTRUCTION GUIDE, LATEST EDITION. SEE ARCHITECTURAL FRAMING PLANS FOR THICKNESS AND TYPE OF FLOOR AND ROOF SHEATHING. (MINIMUM SHEET SIZE 24"). ALL FLOOR AND SHEARWALL PLYWOOD SHALL BE STRUCTURAL I.

UNLESS NOTED OTHERWISE, ALL SILL PLATES IN CONTACT WITH CONCRETE OR MASONRY SHALL BE BOLTED TO THE CONCRETE WITH 5/8" DIAMETER ANCHOR BOLTS AT 4'-0" O.C WITH 0.229"x3"x3" SQUARE PLATE WASHER.

ALL BOLT HEADS AND NUTS WHICH BEAR AGAINST THE FACE OF WOOD MEMBERS SHALL BE PROVIDED WITH WASHERS. NO UPSET THREADS ARE ALLOWED.

PROVIDE MULTIPLE STUDS FOR SOLID BEARING AT THE ENDS OF MISCELLANEOUS BEAMS OR GIRDER WHERE POSTS ARE NOT SHOWN.

PROVIDE DOUBLE FLOOR JOISTS UNDER PARALLEL PARTITIONS.

PROVIDE SOLID BLOCK AT BEARING WALLS, UNDER PERPENDICULAR PARTITIONS AND ELSEWHERE AS REQUIRED PER CBC 2304.11. PROVIDE FULL DEPTH BLOCKING AT ENDS AND AT 10' O.C. MAXIMUM SPACING.

MINIMUM SPLICE NAILING OF DOUBLE PLATES TOBE AS FOLLOWS UNLESS NOTED OTHERWISE: TWELVE (12) 16d EACH SIDE OF SPLICE WITH NO ADJACENT SPLICE WITHIN 4'-0". SEE TYPICAL DETAIL ON GENERAL DETAIL SHEET.

PROVIDE 2X3 CROSS BRIDGING OR 2x SOLID BLOCKING AT A MINIMUM OF 8'-0" O.C. FOR JOISTS (CONTACT METAL BRIDGING OR EQUAL MAY BE USED) WHERE SHEATHING OR GYPSUM BOARD IS NOT APPLIED TO TOP AND BOTTOM OF JOISTS FOR ENTIRE LENGTH OF JOIST.

RETIGHTEN ALL BOLTS BEFORE CLOSING IN.

ALL BOLTS, SCREWS, NAILS AND HARDWARE EXPOSED TO THE WEATHER SHALL BE GALVANIZED WITH G185 GALVANIZATION.

STRUCTURAL STEEL

STEEL MATERIALS SHALL CONFORM TO THE FOLLOWING:

HSS SECTIONS	ASTM A500, GRADE B	ANCHOR BOLTS	ASTM A36
ELECTRODS	ASTM E70XX	MACHINE BOLTS	ASTM A352-X
BASE PLATES	ASTM A36		

SHAPES AND PLATES FOR NON-MOMENT FRAME — ASTM A992
SHAPES AND PLATES FOR MOMENT AND BRACE FRAME — ASTM A572 GRADE 50

ALL STRUCTURAL STEEL SHALL CONFORM TO AISC SPECIFICATIONS FOR THE DESIGN, FABRICATION, AND ERECTION OF STRUCTURAL STEELFOR BUILDINGS. BOLT HOLES SHALL BE 1/16" OVERSIZED, EXCEPT AT BASE PLATES WHERE THEY CAN BE 5/16" OVERSIZED.

ALL SHOP AND FIELD WELDING SHALL BE INSPECTED BY AN APPROVED TESTING LABORATORY. SPECIAL INSPECTION REQUIREMENTS OF SECTION 1701, 2010 CBC, APPLY TO ALL WELDING.

CONTRACTOR SHALL SUBMIT SHOP DRAWINGS FOR REVIEW BY OWNER'S REPRESENTATIVE PRIOR TO FABRICATION. FABRICATE FROM REVIEWED DRAWINGS ONLY.

ALL WELDING TO CONFORM TO THE REQUIREMENTS OF AWS STRUCTURAL WELDING CODE AND SHALL BE PERFORMED BY CERTIFIED WELDERS.

ALL WELDS NOT SPECIFIED SHALL BE CONTINUOUS FILLET WELDS, USING NOT LESS THAN THE MINIMUM SIZES BASED ON THICKNESS OF THICKER PART JOINED PER AISC/AWS, AND IN NO CASE LESS THAN 1/4 INCH U.N.O.

THE STRUCTURAL STEEL CONNECTIONS CONSIST OF THE FOLLOWING:

A. ALL MAJOR STRUCTURAL STEEL CONNECTIONS ARE DETAILED ON THE DRAWINGS. THE DETAILS INDICATE THE REQUIRED MINIMUM PLATE THICKNESSES, ANGLES, WELDS, BOLTS AND GENERAL CONNECTION CONFIGURATION. THE FINAL DIMENSIONAL CONFIGURATION INCLUDING ADJUSTMENTS FOR CAMBER SHALL BE DETERMINED BY THE FABRICATOR ON SHOP DRAWINGS.
B. ANY PROPOSED REVISIONS OR MODIFICATIONS TO THE CONNECTIONS AS SHOWN ON THE DRAWINGS SHALL BE FULLY ENGINEERED BY THE FABRICATOR. SHOP DRAWINGS AND CALCULATIONS PREPARED AND STAMPED BY A PROFESSIONAL ENGINEER LICENSED IN THE STATE OF CALIFORNIA SHALL BE SUBMITTED FOR REVIEW. THE CAPACITY OF CONNECTIONS SHALL NOT BE REDUCED FROM THAT PROVIDED BY THE DETAIL AS SHOWN WHERE NOT SHOWN OR INFERRED FROM DRAWINGS, THE CONNECTION SHALL BE CAPABLE OF NOT LESS THAN 120% OF THE MEMBER CAPACITY IN TENSION.ANY PROPOSED REVISIONS SHALL BE AT NO ADDITIONAL COST TO THE OWNER.

ALL PRINCIPAL NON-FRAME STRUCTURAL BOLTED CONNECTIONS (BEAM TO BEAM, BEAM TO GIRDER, GIRDER/BEAM TO COLUMN) SHALL BE MADE WITH ASTM A325-X HIGH STRENGTH BOLTS WITH THREADS EXCLUDED FROM THE SHEAR PLANE. USE ONE INCH DIAMETER MINIMUM BOLTS UNLESS NOTED OTHERWISE. THE MINIMUM NUMBER OF BOLTS PER CONNECTION SHALL BE TWO.

ALL ADDITIONAL STEEL REQUIRED FOR ERECTION PURPOSES SHALL BE PROVIDED AT NO ADDITIONAL COST AND SHALL BE REMOVED UNLESS APPROVED BY THE CONSTRUCTION MANAGER IN WRITING.

STRUCTURAL OBSERVATIONS

THE FOLLOWING WORK REQUIRE STRUCTURAL OBSERVATION:

FOUNDATION REINFORCING — STRUCTURAL STEEL — SHEARWALL NAILING
REINFORCED CONCRETE — ANCHOR BOLT AND HOLDOWN INSTALLATION

SPECIAL INSPECTION

THE FOLLOWING WORK REQUIRE SPECIAL INSPECTION:
EPOXY APPLICATIONS PER CBC 1704.15(3) EARTHWORK PER CBC 1704.7 SEISMIC RESISTANCE PER CBC 1707
CONCRETE MASONRY CONSTRUCTION PER CBC 1704.5

DESIGN CRITERIA:

DEAD LOADS
FLOOR (HARDWOOD) = 12.5psf
ROOF = 14psf ROOF DECK =40psf
WALL (EXTERIOR) = 19.5psf (VERTICAL SURFACE)
WALL (INTERIOR) = 9psf (VERTICAL SURFACE)

LIVE LOADS
FLOOR = 40psf (REDUCIBLE)
ROOF = 20psf (REDUCIBLE)

SYMBOLS

- CONCRETE
- DETAIL REFERENCE SYMBOL
- X / SX.X — DETAIL NUMBER / SHEET NUMBER
- CONTINUOUS WOOD MEMBER IN SECTION
- WOOD BLOCKING MEMBER IN SECTION
- FRAMING MEMBER / DIAGRAMMATIC EXTENT OF FRAMING
- HD** — SIMPSON HOLD DOWN, SEE PLAN AND DETAIL
- CHANGE IN ELEVATION SYMBOL
- X / Sx.x — LETTER OR NUMBER OF SECTION / SHEET ON WHICH ELEVATION OCCURS

ABBREVIATIONS

&	AND	N.T.S.	NOT TO SCALE
@	AT	NO.	NUMBER
A.B.	ANCHOR BOLT	O.C.	ON CENTER
BM.	BEAM	OPP.	OPPOSITE
BOT.	BOTTOM	O.H.	OPPOSITE HAND
B.O.	BOTTOM OF	O.D.	OUTSIDE DIAMETER
℄	CENTER LINE	PL	PLATE
COL.	COLUMN	PLY.	PLYWOOD
CONT.	CONTINUOUS	P.T.	PRESSURE OR PRESERVATIVE TREATED
CLR	CLEAR	REINF.	REINFORCEMENT
CONC	CONCRETE	REQ'D	REQUIRED
CONN	CONNECTION	REV	REVISED OR REVISION
DET.	DETAIL	S.A.D.	SEE ARCHITECTURAL DRAWINGS
D.F.	DOUGLAS FIR	S.C.D.	SEE CIVIL DRAWINGS
D.S.	DRAG STRUT	SCHED.	SCHEDULE
DWG.	DRAWING	SIM.	SIMILAR
DIAG	DIAGONAL	SQ.	SQUARE
DIA	DIAMETER	SYM.	SYMMETRICAL
DN	DOWN	SECT	SECTION
EA.	EACH	S.O.G.	SLAB ON GRADE
EL.	ELEVATION	SPEC	SPECIFICATION
EXT.	EXTERIOR	SQ.	SQUARE
E.N.	EDGE NAILING	SF	SQUARE FEET
E.F.	EACH FACE	STAGG	STAGGERED
EQ	EQUAL	STD	STANDARD
(E)	EXISTING	STL	STEEL
EXT	EXTERIOR	STIFF	STIFFENER
FL.	FLOOR	STRUCT	STRUCTURAL
FTG.	FOOTING	S.W.	SHEAR WALL
FT	FEET	T&B	TOP AND BOTTOM
FLR	FLOOR	T&G	TONGUE AND GROOVE
GALV	GALVANIZE	T.O.C.	TOP OF CONCRETE
GA	GAUGE	TYP.	TYPICAL
GR	GRADE	THK	THICK OR THICKNESS
HORIZ.	HORIZONTAL	T & B	TOP AND BOTTOM
HT	HEIGHT	T.O.	TOP OF
IN.	INCH	U.O.N.	UNLESS OTHERWISE NOTED
INFO	INFORMATION	U.N.O.	UNLESS NOTED OTHERWISE
K	KIPS	VERT	VERTICAL
KIPS	1000 POUNDS	W/	WITH
LAT	LATERAL	W/O	WITHOUT
LL	LIVE LOAD	WT	WEIGHT
M.B.	MACHINE BOLTS	W.W.F.	WELDED WIRE FABRIC
MAX.	MAXIMUM	WF	WIDE FLANGE
MIN.	MINIMUM	W.P.	WORK POINT
MISC.	MISCELLANEOUS		
MECH	MECHANICAL		
MTL	METAL		
MID	MIDDLE		
MF	MOMENT FRAME		

CIVIL ENGINEER

G.S. ENGINEERING
1574 SISKIYOU DRIVE
WALNUT CREEK, CA 94598
Tel: (510)304-9812
Email: gsengineering2000@gmail.com

PROJECT

KARPEI RESIDENCE
HOUSE ADDITION & REMODEL
1037 CURTIS AVE
ALBANY, CA 94706

PROJECT NO
16-30

REGISTERED PROFESSIONAL ENGINEER
GUANGSHENG WANG
C 77916
EXP 6-30-2017
CIVIL
STATE OF CALIFORNIA

PLANS SUBMITTAL

SHEET CONTENTS

STRUCTURAL NOTES

SHEET NUMBER

S1.0

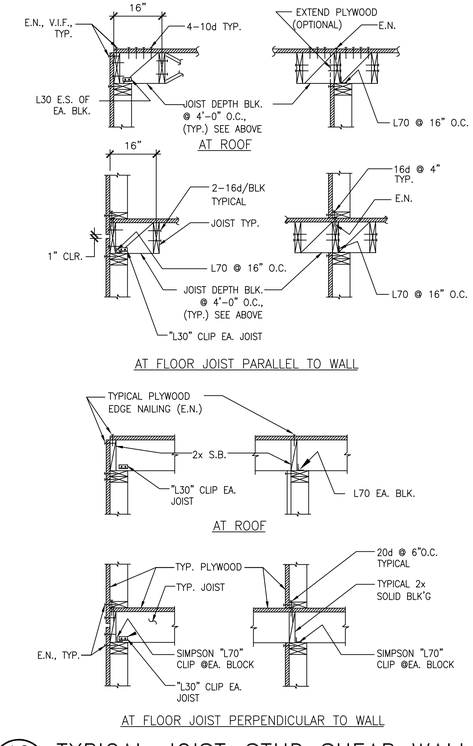

10 TYPICAL JOIST-STUD SHEAR WALL FRAMING DETAILS

SCALE: NONE

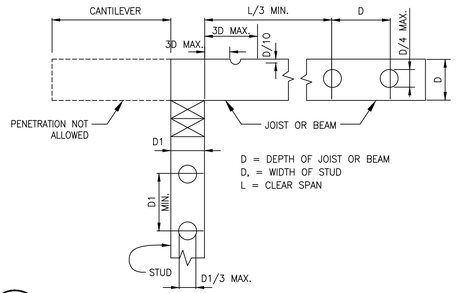

6 HOLES & NOTCHES IN STUD OR JOIST & BEAM

SCALE: NONE

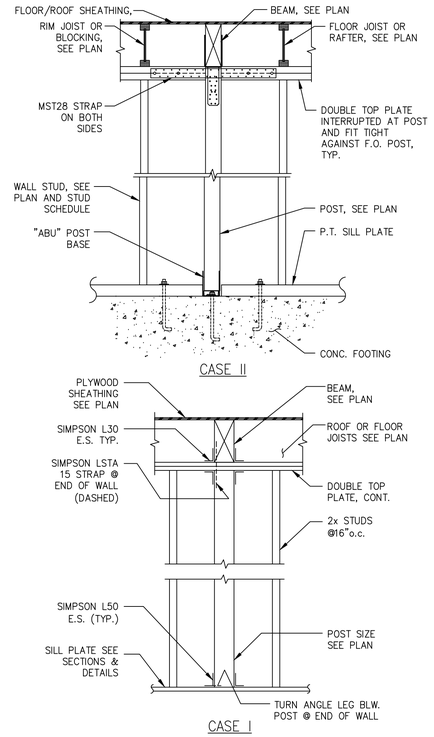

4 TYPICAL POST AND BEAM IN STUD WALL DETAIL

SCALE: NONE

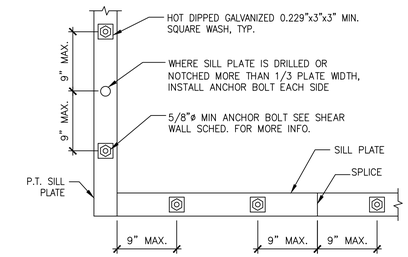

1 SILL PLATE BOLTING DETAIL

SCALE: NONE

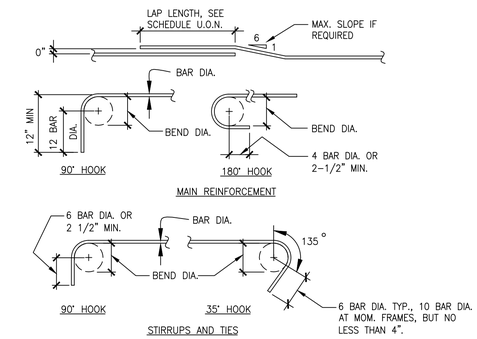

2 TYPICAL BAR HOOKS AND BENDS

SCALE: NONE

MINIMUM REINF LAP SCHED

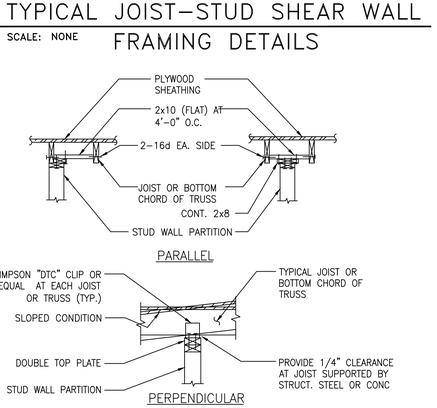

11 TYPICAL NON-BEARING WALL DETAIL

SCALE: NONE

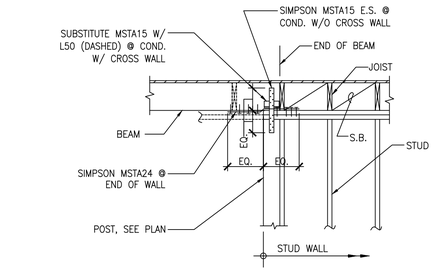

7 BEAM & POST IN STUD WALL

SCALE: NONE

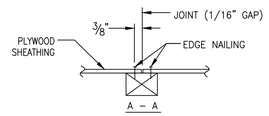

3x4 BLOCKING BETWEEN JOISTS OR STUDS, FIT TIGHTLY @ ENDS WITH 2-10d TOENAILS EACH END.

BLOCKING FOR PLYWOOD SHEATHING

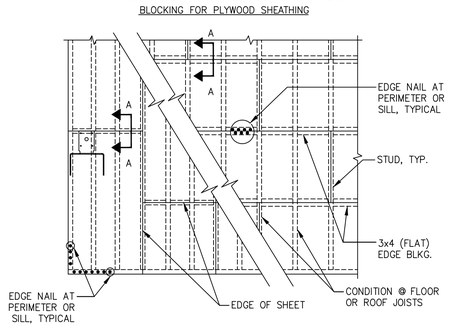

8 TYPICAL PLYWOOD DIAPHRAGMS

SCALE: NONE

HOLD DOWN TYPE (2)	MIN. END POST SIZE	SCREWS /BOLTS TO POST	BOLTS THRU FLOOR (3) (4)	BOLT TO FDN. (3) (4)	SIMPSON ANCHOR BOLT	
				THREADED ROD W/PL WASHER	TYPE	EMBEDMENT LENGTH
HDU2	2-2x4	6-SDS¼x2½	5/8" ø	5/8"ø W/13" MIN. EMB. ¼"x3"x3" PLATE WASHER	SSTB16	13"
HDU4	2-2x4	10-SDS¼x2½	5/8" ø	5/8"ø W/17" MIN. EMB. ¼"x3"x3" PLATE WASHER	SSTB20	17"
HDU5	2-2x6	14-SDS¼x2½	5/8" ø	5/8"ø W/16" MIN. EMB. ¼"x3"x3" PLATE WASHER	SSTB24	21"
HDU8	3-2x6 OR 4x6	20-SDS¼x2½	7/8" ø	7/8"ø W/18" MIN. EMB. ¼"x.36"x.36" PLATE WASHER	SSTB28	25"
SIMPSON STRONG-WALL	PER MANUFACTURE SPECIFICATION					

1. REFER TO THE PLANS FOR HOLD DOWN ASSEMBLY MARKS AND HOLD DOWN POST SIZES.
2. FOR HOLD DOWN ASSEMBLIES, USE SIMPSON CATALOG "HDU" SERIES HOLD DOWNS, OR APPROVED EQUAL.
3. BOLTS THROUGH FLOOR AND EMBEDDED IN FOUNDATION SHALL BE A36 STEEL ALL THREADED RODS.
4. AT HOLDOWN OVER FRAMED BEAM, USE SQ. PLATE WASHERS REQ'D. FOR FDN. H.D.
5. EPOXY THREADED RODS SHALL BE INSTALLED PER EPOXY MANUFACTURES SPECIFICATIONS.

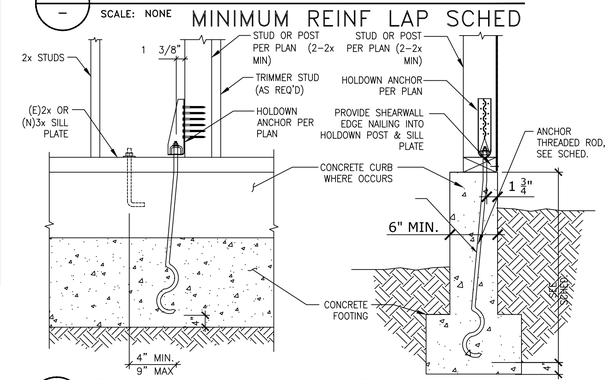

3 TYPICAL HOLDOWN DETAILS

SCALE: NONE

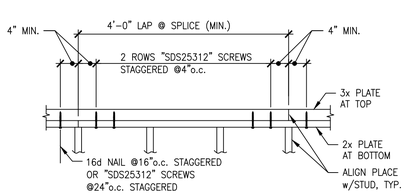

* ADJUST BOLT SPACING AS REQ'D. TO MISS JOISTS OR BMS ABOVE AND STUDS BELOW.

NOTE: USE ONLY WHERE REFERENCED ELSEWHERE. OTHERWISE USE NAILED SPLICE PER 5

12 TOP PLATE SPLICE DETAIL AT S.W. AND BEARING WALL

SCALE: NONE

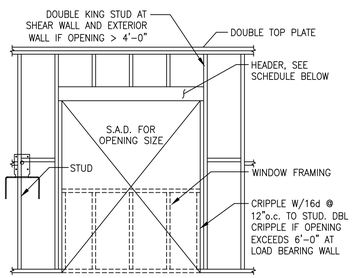

MAX. SPAN	MIN. HEADER SIZE	
	NON-BEARING	BEARING
3'-6"	3½"x5½" LSL	5¼"x5½" LVL
6'-0"	3½"x5½" LSL	5¼"x7¼" LVL
9'-0"	3½"x7¼" LSL	5¼"x9¼" LVL
12'-0"	3½"x9¼" LSL	5¼"x11⅞" LVL
OVER 12'	PER PLAN	PER PLAN

NOTE: CONNECTIONS AND HEADER SIZES ON THIS DETAIL APPLY TO ALL OPENINGS UNLESS NOTED OTHERWISE.

9 OPENING IN STUD WALL TYP HEADER DETAIL

SCALE: NONE

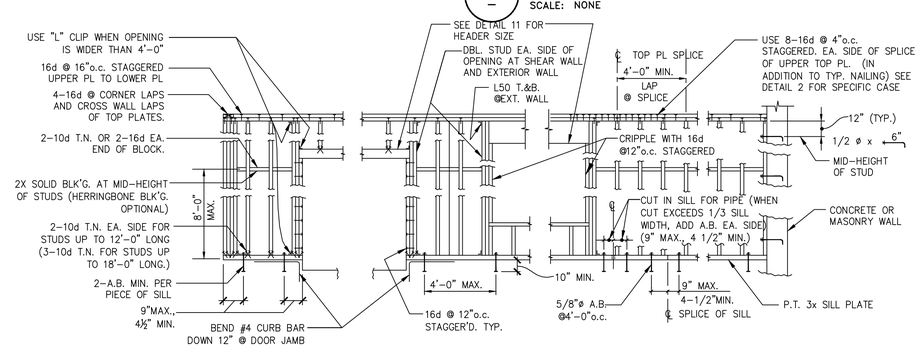

5 TYPICAL STUD WALL FRAMING ELEVATIONS

SCALE: NONE

CIVIL ENGINEER

G.S. ENGINEERING
1574 SISKIYOU DRIVE
WALNUT CREEK, CA 94598
Tel: (510)304-9812
Email: gsengineering2000@gmail.com

PROJECT

KARPEI RESIDENCE
HOUSE ADDITION & REMODEL

1037 CURTIS AVE
ALBANY, CA 94706

PROJECT NO
16-30

REGISTERED PROFESSIONAL ENGINEER GUANGSHENG WANG C 77916 EXP 6-30-2017 CIVIL STATE OF CALIFORNIA

PLANS SUBMITTAL

SHEET CONTENTS

TYPICAL DETAILS

SHEET NUMBER

S1.1

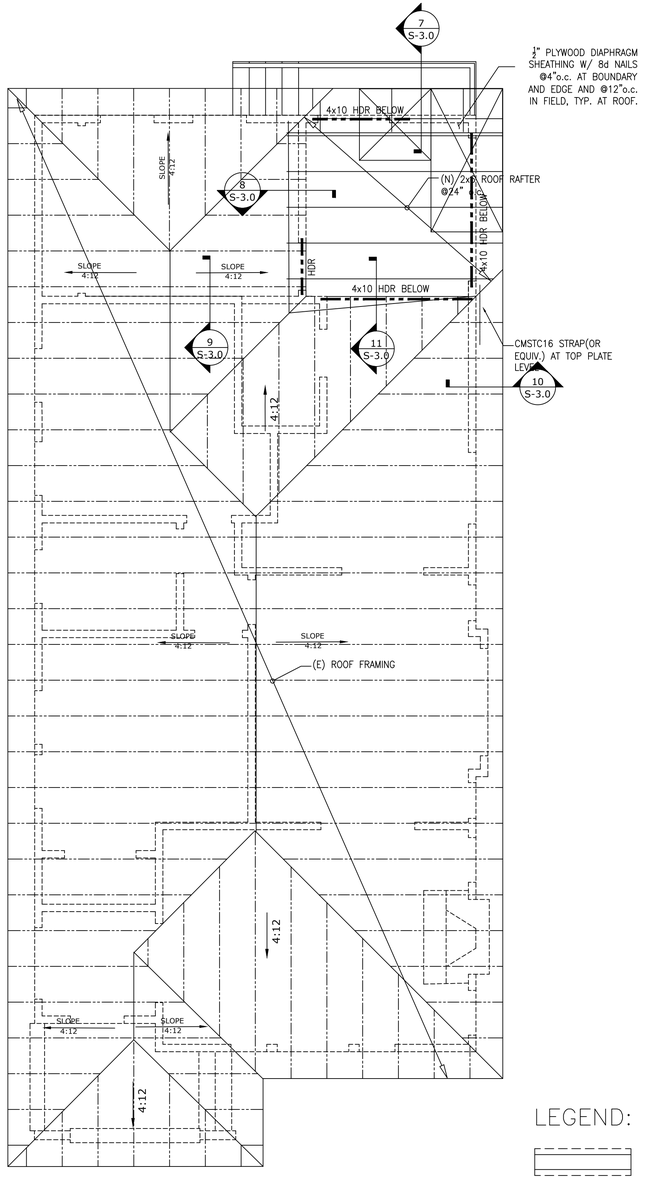

1 PROPOSED ROOF PLAN

SCALE: 1/4" = 1'-0"

NORTH

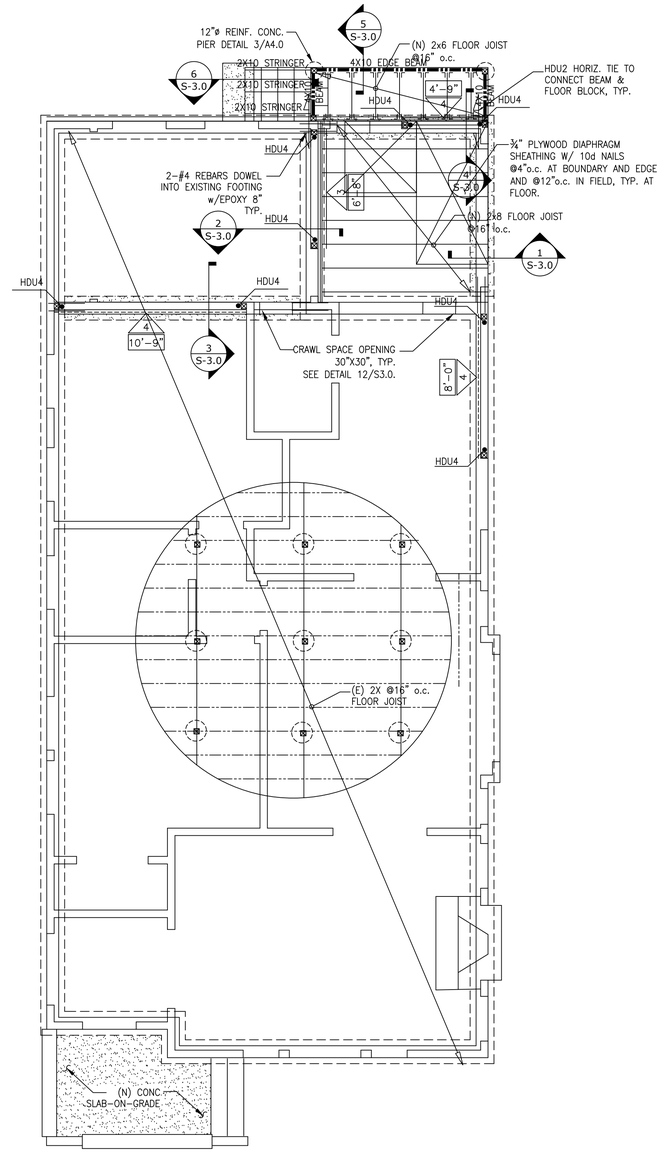

2 FLOOR FRAMING/FOUNDATION PLAN

SCALE: 1/4" = 1'-0"

NORTH

LEGEND:

EXISTING CONCRETE FOUNDATION

PROPOSED CONCRETE FOUNDATION

NAILING SCHEDULE

ROOF	
1. BLOCKING BETWEEN JOISTS OR RAFTER TO TOP PLATE, TOE NAIL	3-8d
2. CEILING JOISTS TO PLATE, TOE NAIL	3-8d
3. CEILING JOISTS NOT ATTACHED TO PARALLEL RAFTER, LAP OVER PARTITIONS, FACE NAIL	3-10d
4. RAFTER TO PLATE, TOE NAIL	2-16d
5. ROOF RAFTERS TO RIDGE, VALLEY OR HIP RAFTERS: TOE NAIL/FACE NAIL	4-16d/3-16d
WALL	
6. BUILT-UP CORNER STUDS	10d@24"o.c.
7. CONTINUOUS HEADER TO STUD, TOE NAIL	4-8d
8. DOUBLE STUDS, FACE NAIL	10d@24"o.c.
9. DOUBLE TOP PLATES, FACE NAIL	10d@24"o.c.
10. DOUBLE TOP PLATES,MIN. 48-INCH OFFSET OF END JOISTS,FACE NAIL IN LAPPED AREA	8-16d
11. SOLE PLATE TO JOIST OR BLOCKING, FACE NAIL	16d@16"o.c. ALONG EACH EDGE
12. STUD TO SOLE PLATE, TOE NAIL	3-8d or 2-16d
13. TOP OR SOLE PLATE TO STUD, END NAIL	2-16d
14. TOP PLATES, LAPS AT CORNERS AND INTERSECTIONS, FACE NAIL	2-10d
15. 1" BRACE TO EACH STUD AND PLATE, FACE NAIL	2-8d, 2 STAPLES 1 1/2"
FLOOR	
16. JOIST TO SILL OR GIRDER, TOE NAIL	3-8d
17. 1"X6" SUBFLOOR OR LESS TO EACH JOIST, FACE NAIL	2-8d, 2 STAPLES 1 3/4"
18. RIM JOIST TO TOP PLATE, TOE NAIL	8d@6"o.c.
19. LEDGER STRIP SUPPORTING JOISTS OR RAFTERS	3-16d AT EACH BEARING
WOOD STRUCTURAL PANELS, SUBFLOOR, ROOF AND INTERIOR WALL SHEATHING TO FRAMING	
20. 5/16"- 1/2" ,6d COMMON NAIL(SUBFLOOR, WALL), 8d COMMON NAIL (ROOF)	EDGE NAIL@6"o.c., INTERMEDIATE NAIL@12"o.c.
21. 19/32"- 1" 6d COMMON NAIL(SUBFLOOR, WALL), 8d COMMON NAIL (ROOF)	EDGE NAIL@6"o.c., INTERMEDIATE NAIL@12"o.c.
OTHER WALL SHEATHING	
22. 1/2" STRUCTURAL CELLULOSIC FIBERBOARD SHEATHING, 1/2"GALV. ROOFING NAIL	EDGE NAIL@3"o.c., INTERMEDIATE NAIL@6"o.c.
23. 25/32" STRUCTURAL CELLULOSIC FIBERBOARD SHEATHING, 1 3/4"GALV. ROOFING NAIL	EDGE NAIL@3"o.c., INTERMEDIATE NAIL@6"o.c.
24. 1/2" GYPSUM SHEATHING, 1 1/2" GALV. ROOFING NAIL	EDGE NAIL@7"o.c., INTERMEDIATE NAIL@7"o.c.
25. 5/8" GYPSUM SHEATHING, 1 3/4" GALV. ROOFING NAIL	EDGE NAIL@7"o.c., INTERMEDIATE NAIL@7"o.c.
WOOD STRUCTURAL PANELS, COMBINATION SUBFLOOR UNDERLAYMENT TO FRAMING	
26. 3/4" AND LESS, 6d DEFORMED NAIL OR 8d COMMON NAIL	EDGE NAIL@6"o.c., INTERMEDIATE NAIL@12"o.c.

FOOTNOTES:
1. COMMON OR BOX NAILS MAY BE USED UNLESS OTHERWISE NOTED.

NOTES:
1. NAILING PER SCHEDULE ABOVE IS TO BE USED WHERE NAILING IS NOT SPECIFIED ON PLANS OR DETAILS. NAILING PER PLANS AND DETAILS SUPERSEDE NAILING SCHEDULE UNLESS APPROVED BY ENGINEER

KEY:

	WALLS ABOVE
	WALLS BELOW
	HEADER AND BEAM BELOW
'-" #	SHEAR WALL (SEE SCHEDULE & TYP DETAIL)
⊠	POST
□	POST BELOW
	HANGERS: USE ITT AT I-JOIST, B AT DBL I-JOIST, AND USE FACE MOUNT HANGERS AT THE BEAMS. FOLLOW MANUFACTURER RECOMMENDATIONS FOR SPECIFIED HANGER U.O.N.
PHD# PHD#	HOLDOWN FASTENED TO EXISTING OR NEW 4x, 3x, OR 2-2x END POST (SEE TYP. DETAILS)

CIVIL ENGINEER

G.S. ENGINEERING
1574 SISKIYOU DRIVE
WALNUT CREEK, CA 94598
Tel: (510)304-9812
Email: gsengineering2000@gmail.com

PROJECT

KARPEI RESIDENCE
HOUSE ADDITION & REMODEL

1037 CURTIS AVE
ALBANY, CA 94706

PROJECT NO
16-30

REGISTERED PROFESSIONAL ENGINEER
GUANGSHENG WANG
C 77916
EXP 6-30-2017
CIVIL
STATE OF CALIFORNIA

PLANS SUBMITTAL

SHEET CONTENTS

ROOF FRAMING PLAN, FOUNDATION/FIRST FLOOR FRAMING PLAN

SHEET NUMBER

S2.0

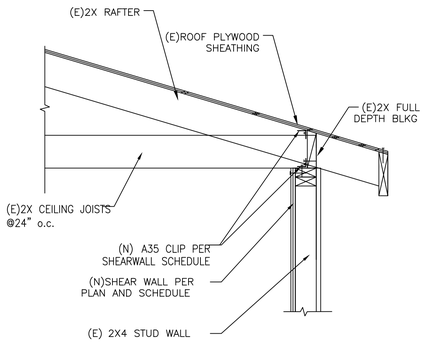

10 DETAIL
SCALE: 1"=1'-0"

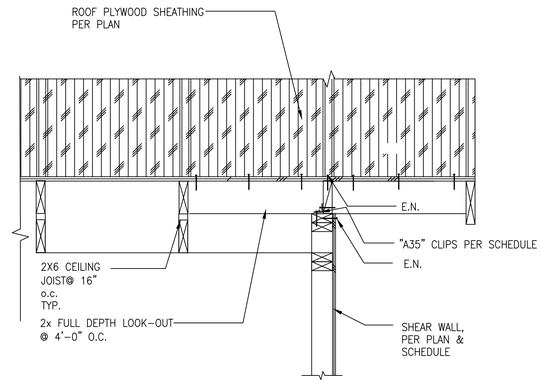

7 DETAIL
SCALE: 1"=1'-0"

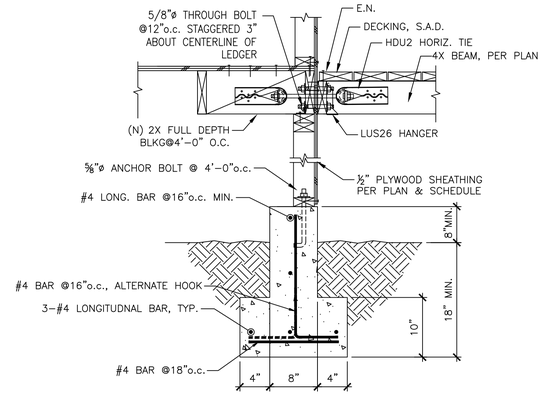

4 TYPICAL FOUNDATION DETAIL
SCALE: 1" = 1'-0"

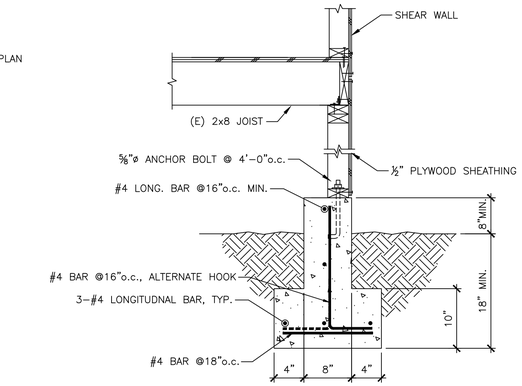

1 TYPICAL FOUNDATION DETAIL
SCALE: 1" = 1'-0"

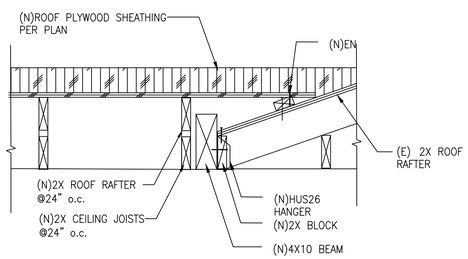

11 ROOF DETAIL
SCALE: 1"=1'-0"

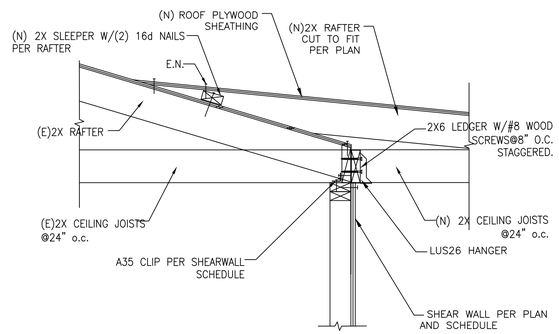

8 DETAIL
SCALE: 1"=1'-0"

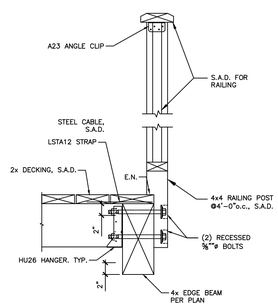

5 TYPICAL DECK RAILING DETAIL
SCALE: 1-1/2"=1'-0"

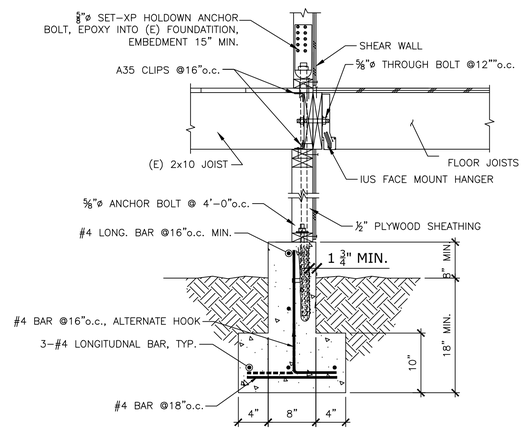

2 TYPICAL FOUNDATION DETAIL AT (E) HOUSE
SCALE: 1" = 1'-0"

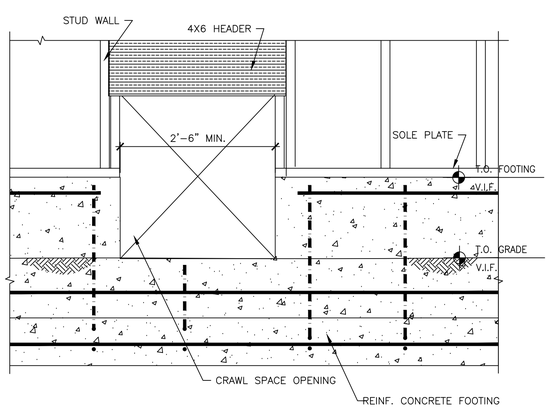

12 FOUNDATION DETAIL
SCALE: NONE

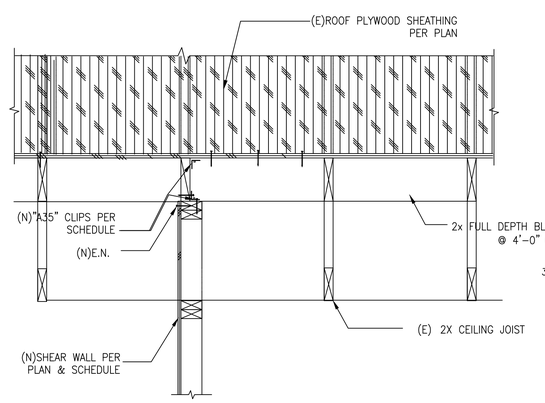

9 DETAIL
SCALE: 1"=1'-0"

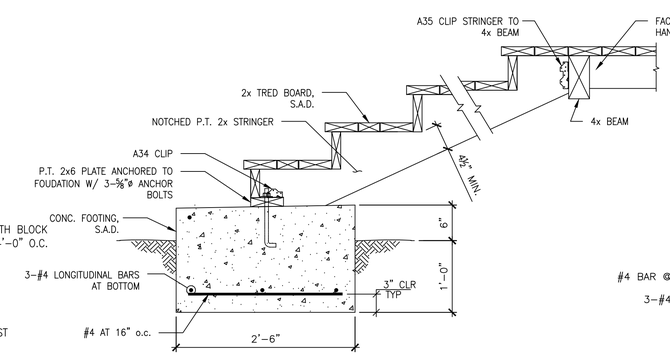

6 STAIR LANDING FOUNDATION DETAIL
SCALE: N.T.S.

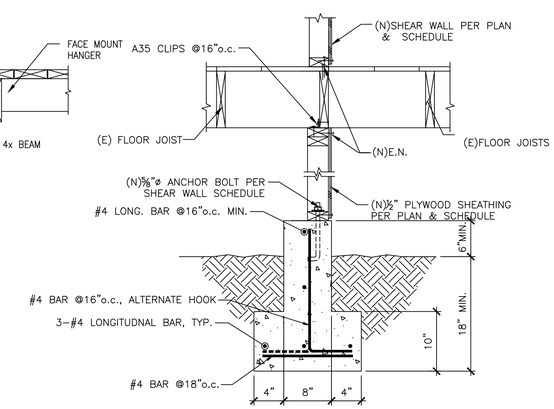

3 TYPICAL FOUNDATION DETAIL AT (E) HOUSE
SCALE: 1" = 1'-0"

CIVIL ENGINEER
G.S. ENGINEERING
1574 SISKIYOU DRIVE
WALNUT CREEK, CA 94598
Tel: (510)304-9812
Email: gsengineering2000@gmail.com

PROJECT
KARPEI RESIDENCE
HOUSE ADDITION & REMODEL
1037 CURTIS AVE
ALBANY, CA 94706

PROJECT NO
16-30

REGISTERED PROFESSIONAL ENGINEER
GUANGSHENG WANG
C 77916
EXP 6-30-2017
CIVIL
STATE OF CALIFORNIA

PLANS SUBMITTAL

SHEET CONTENTS
DETAILS

SHEET NUMBER
S3.0