City of Albany
MAR 21 2016
Community Development

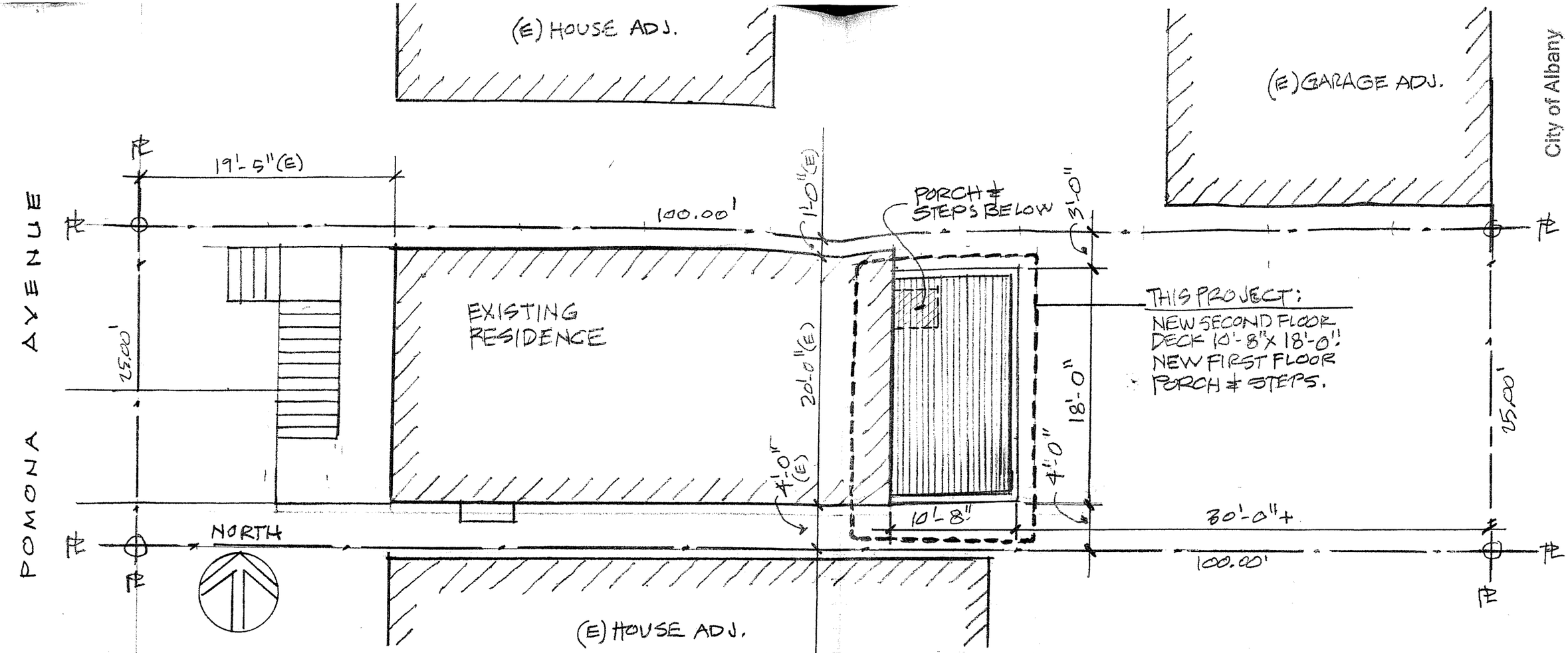

SITE PLAN

SCALE: 1/8" = 1'-0"

MATERIALS SCHEDULE:

ITEM:	
• POSTS, BEAMS, JOISTS, LEDGER	: PRESSURE TREAT #2 MIN.
• DECKING	: REDWOOD
• GUARDRAIL POSTS, RAILS	: K.D. HEART REDWOOD
• SM FLASHING, BOLTS, FASTNR	: HOT DIP GALV.
• MEMBRANE FLASHING (SAM)	: GRACE, ICE & WATER SH.
• CONCRETE	: MIN. 2,500 P.S.I.
• POST ANCHORS (SIMPSON)	: SEE DETAILS

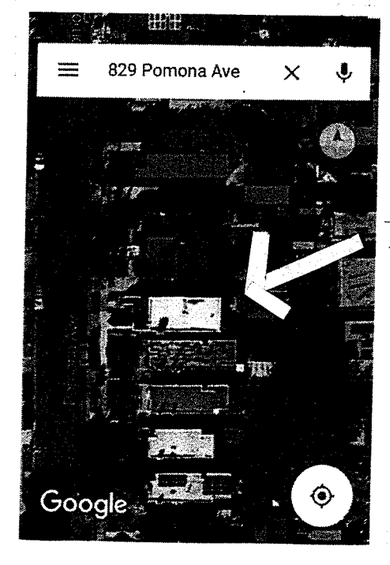

SUBJECT PROPERTY

LOCATION MAP

LICENSED ARCHITECT
JOHN C. KEMP (JACK)
No. C-7870
Exp. 31 JUL. 2016
STATE OF CALIFORNIA

PROJECT:
BACKYARD DECK @ 2ND FLR.

DYMENT RESIDENCE
829 POMONA AVE.
ALBANY, CA. 94706
MARCH 7, 2016

SHEET 1 OF 4

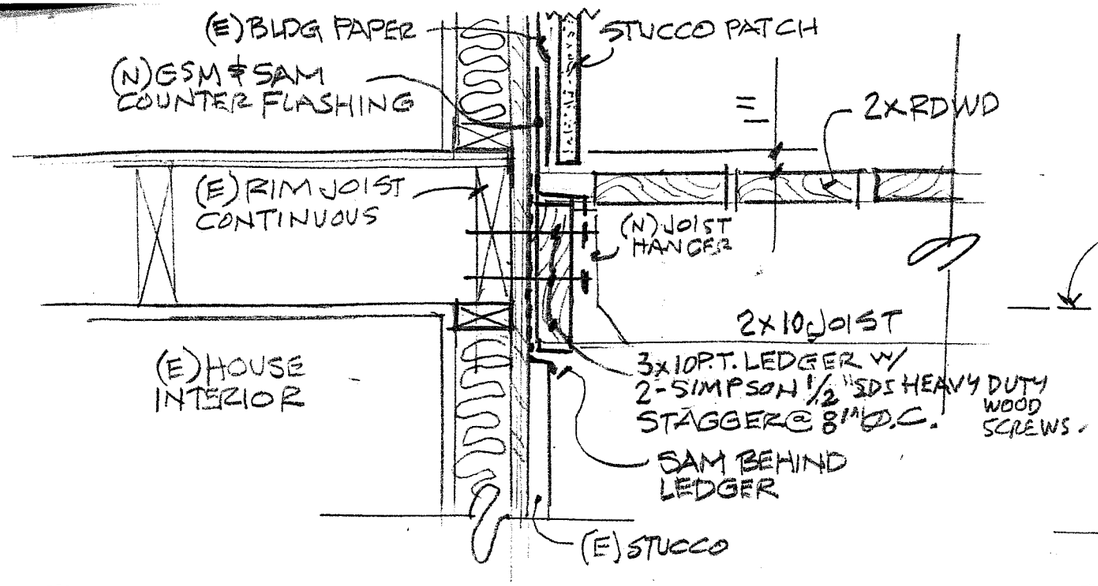

C DECK LEDGER DETAIL

1½" = 1'-0"

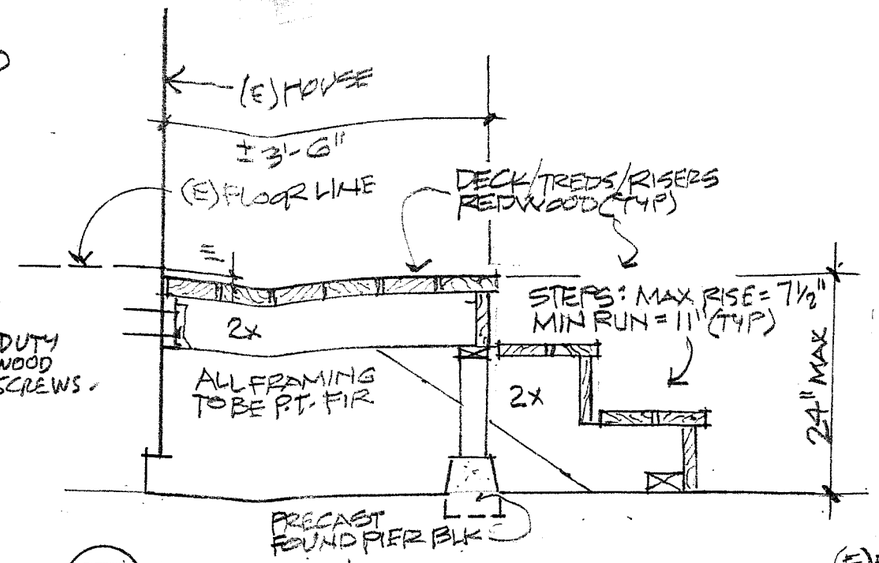

B PORCH & STEPS SECTION

3/4" = 1'-0"

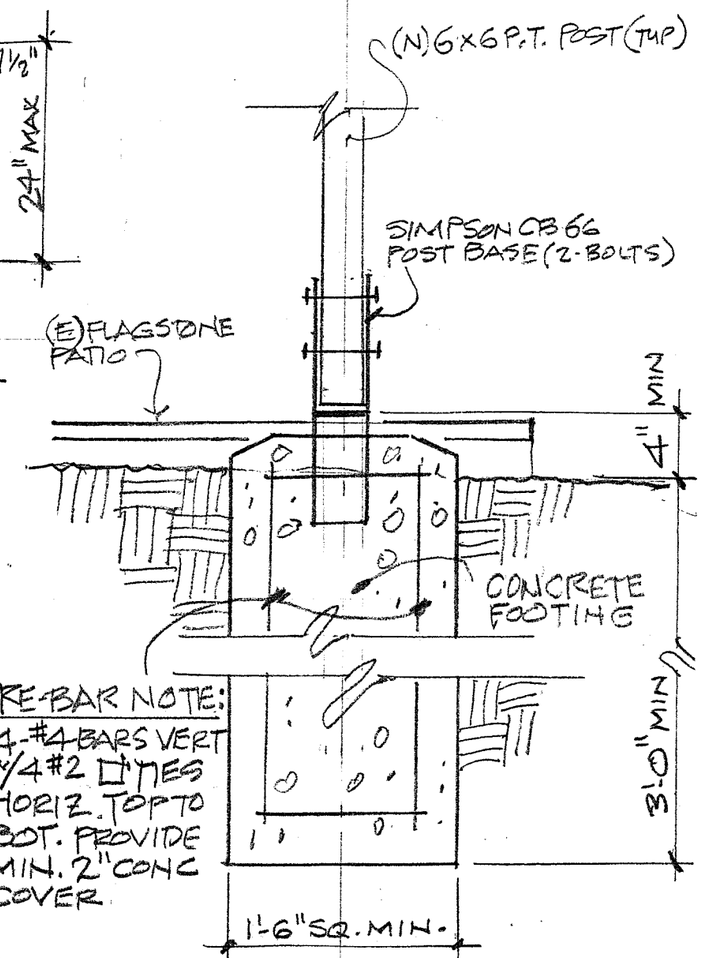

A DECK POST FOOTING DET.

1" = 1'-0"

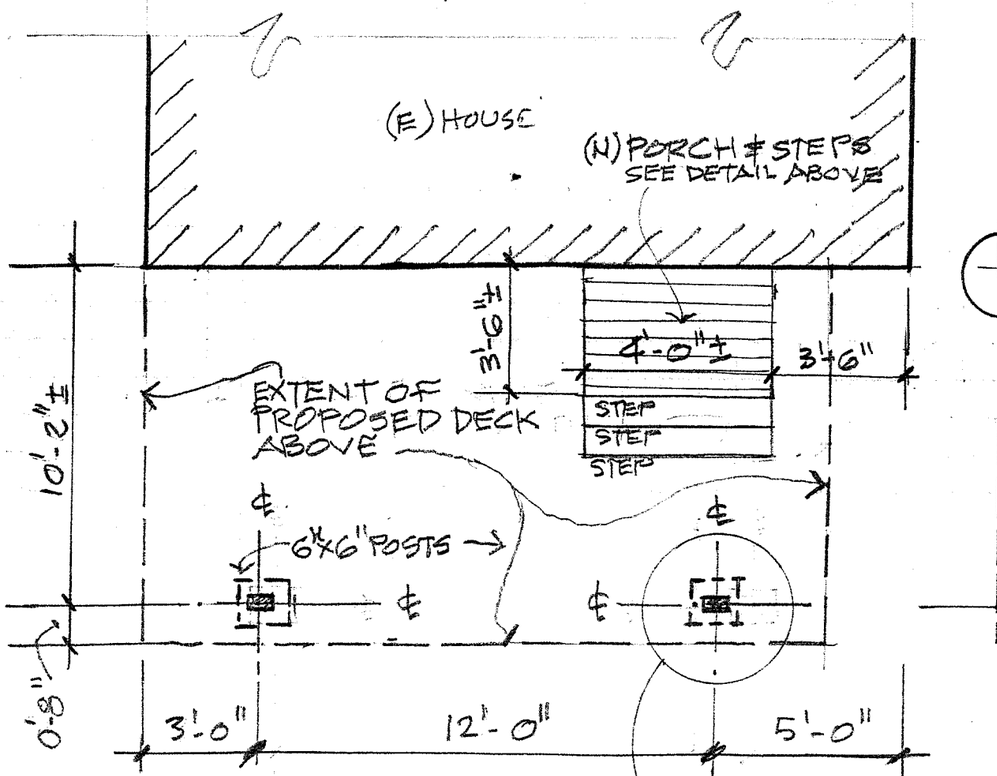

FOUNDATION PLAN

1/4" = 1'-0"

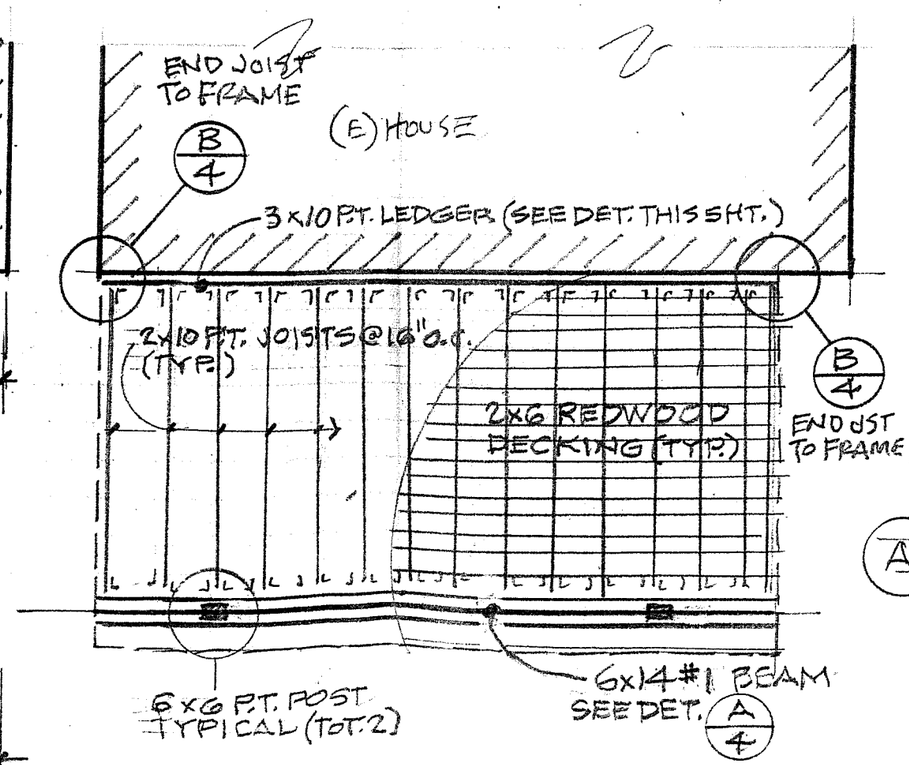

SECOND FLOOR:
DECK FRAMING PLAN

1/4" = 1'-0"

PROJECT:
BACKYARD DECK @ 2ND FL

DYMENT RESIDENCE
829 POMONA AVE.
ALBANY, CA. 94706

SHEET 2 of 4

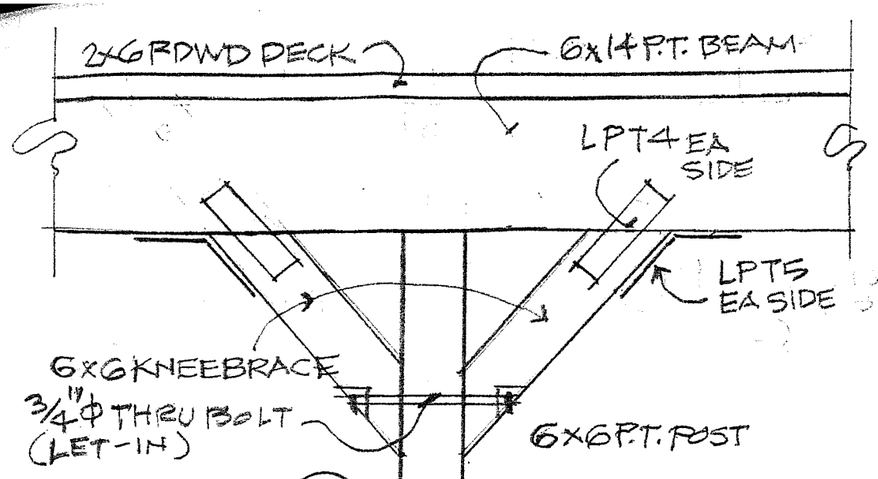

C KNEEBRACE DET.

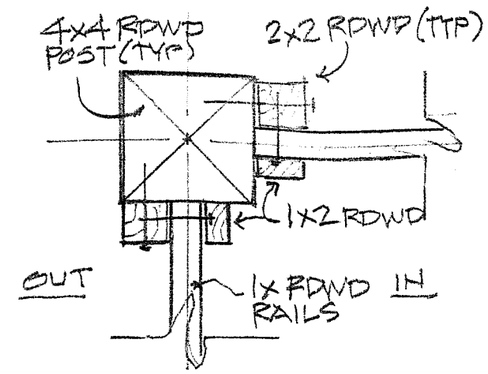

B GUARDRAIL POST DET.

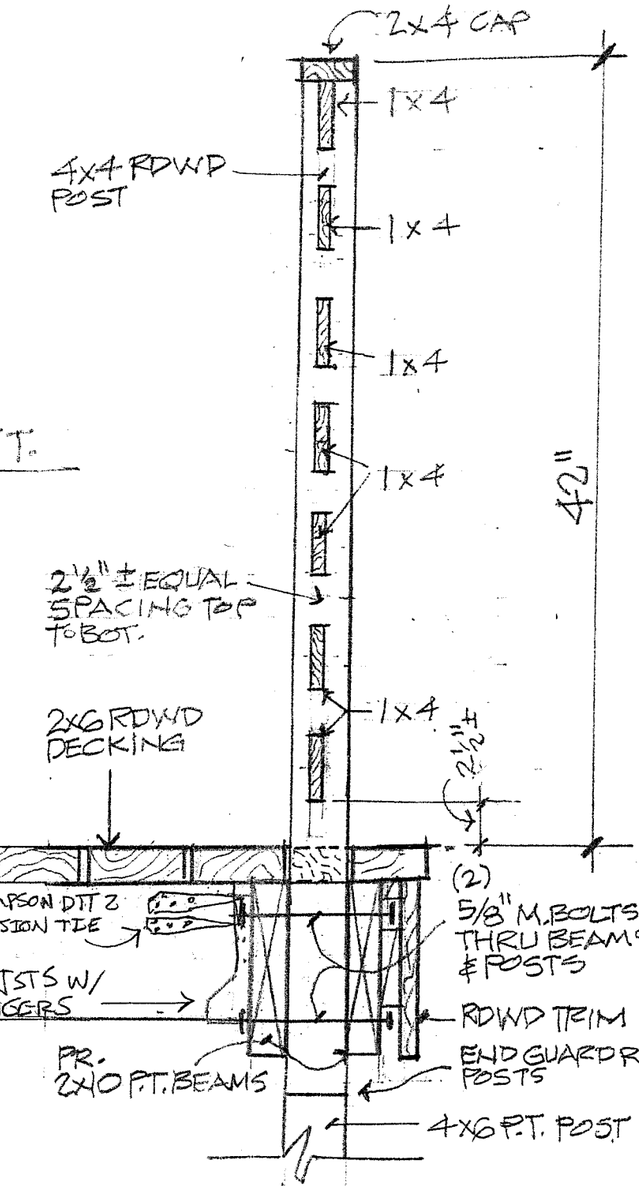

A DECK BEAM & GUARDRAIL

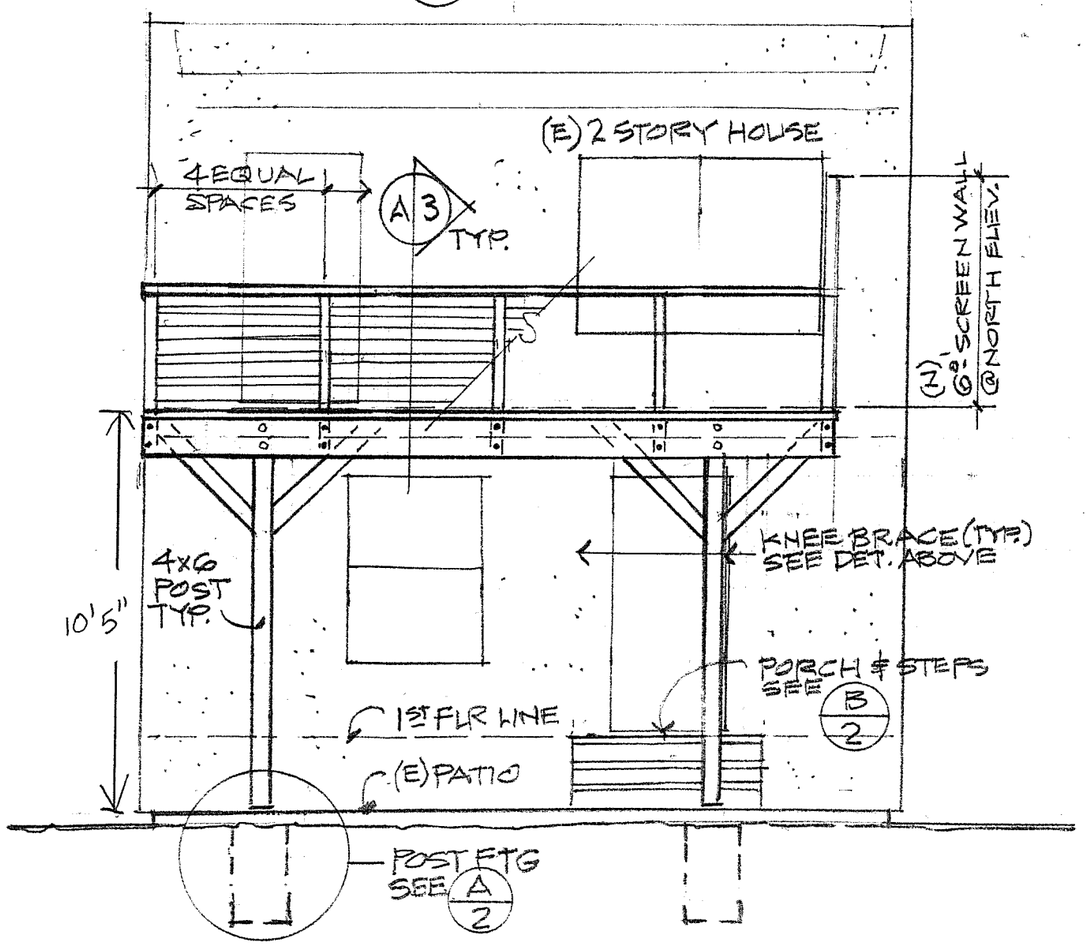

REAR ELEVATION:

SCALE: 1/4" = 1'-0"

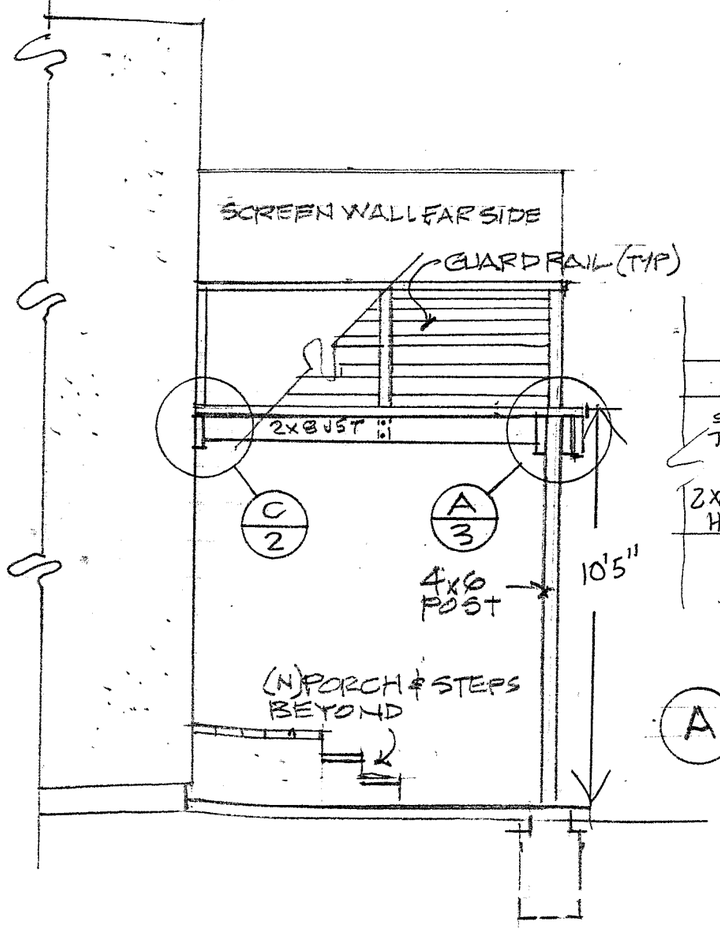

PARTIAL SOUTH ELEVATION (SECTION)

SCALE: 1/4" = 1'-0"

PROJECT:
BACKYARD DECK · 2ND FL

DYMENT RESIDENCE
829 POMONA AV.
ALBANY, CA 94706

SHEET 3 OF 4

ALTERNATE DECK POST SPACING:

- THIS SHEET SHOWS DECK POST SPACING @ 16'-8" ℄ TO ℄, (ORIG SPACING ON SHT 2 OF 4 IS 12'-0" ℄ TO ℄.
- THIS ALT SHOWS 6x14 BEAM W/ POST CAP ECCQ (ORIG BEAMS ARE 2x10's).
- THIS ALT SHOWS A SINGLE KNEEBRACE @ EA. POST; (ORIG HAS A PAIR AT EA. POST).
- ALL OTHER CONDITIONS ARE AS SHOWN ON SHEETS 1 THRU 3 OF 4.

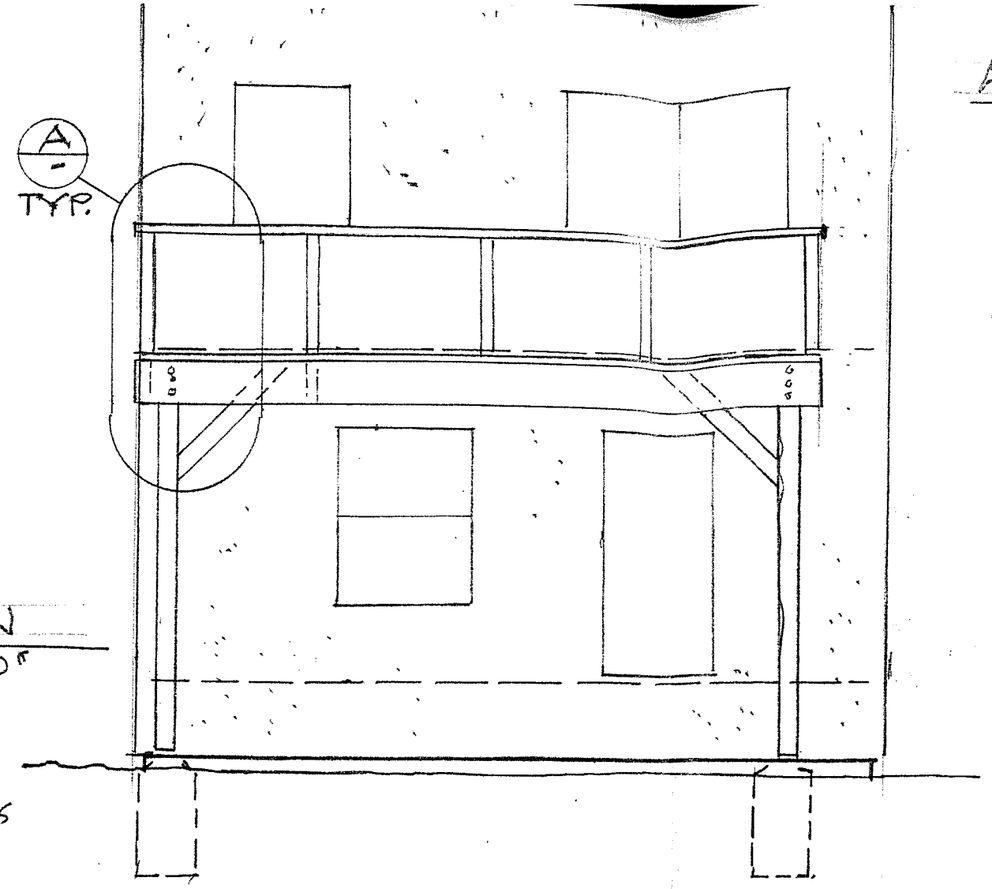

ALT. REAR ELEVATION
1/4"=1'-0"

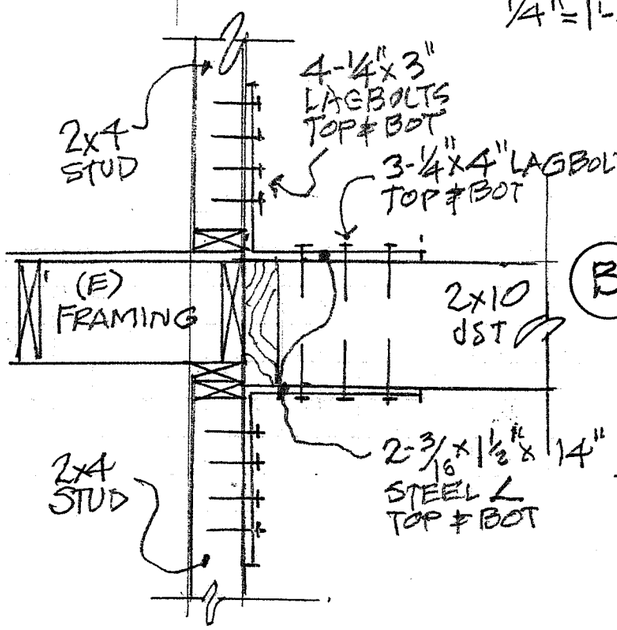

B END JOISTS TO FRAME DET.

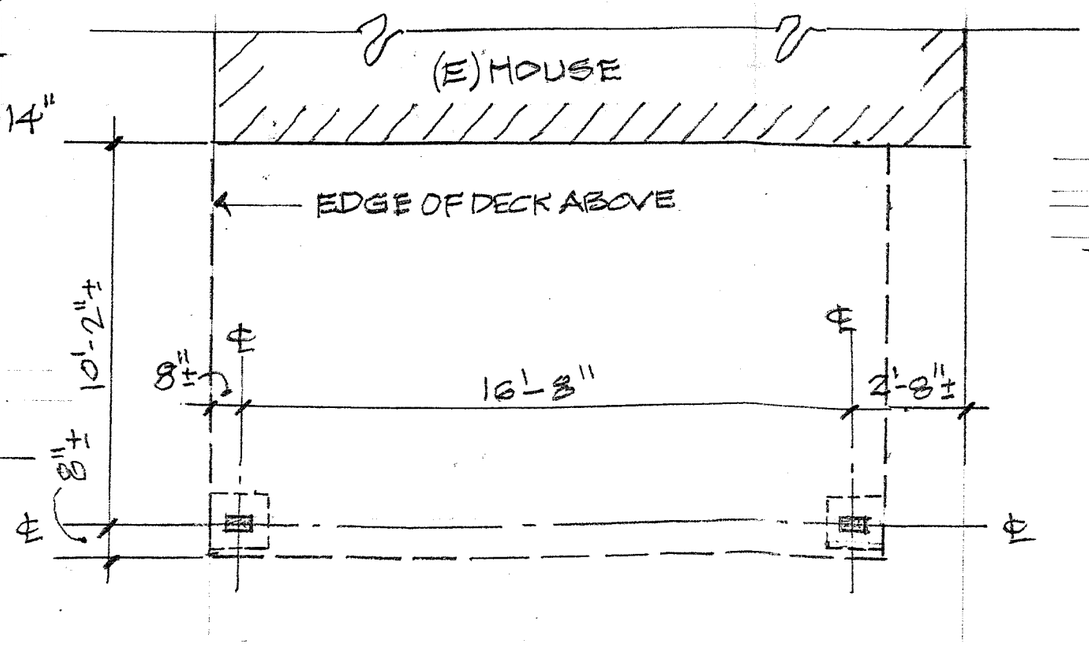

ALT. FOUNDATION PLAN 1/4"=1'-0"

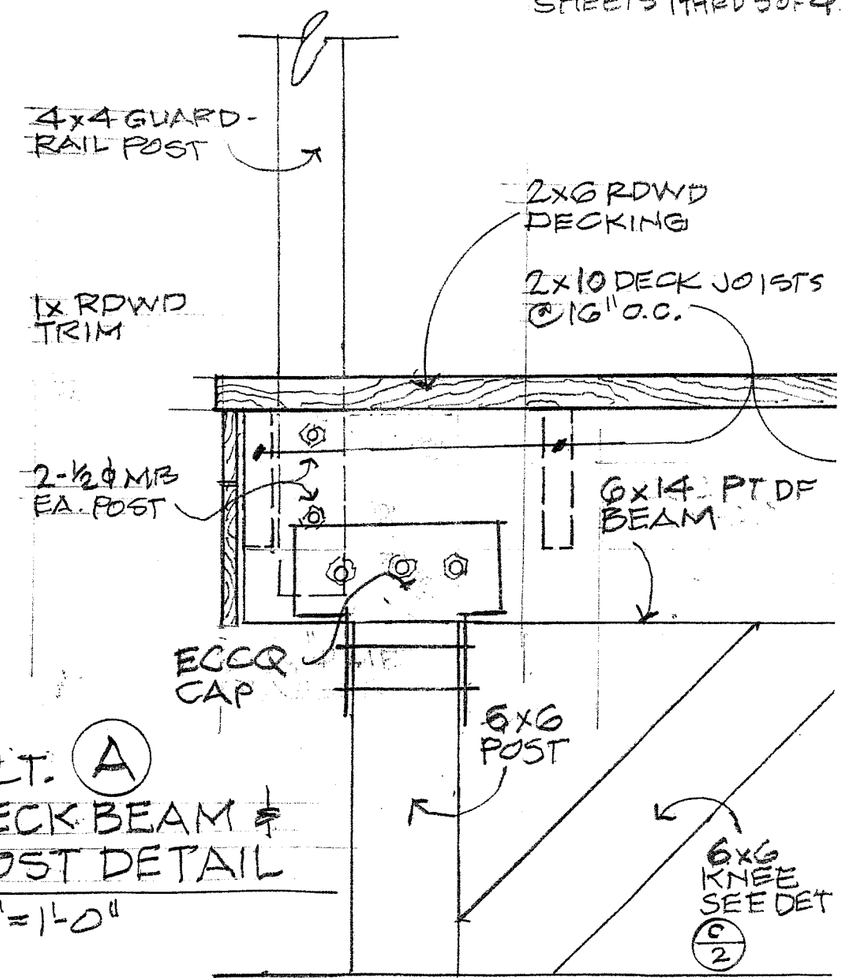

ALT. A DECK BEAM & POST DETAIL
1 1/2"=1'-0"

PROJECT:
BACKYARD DECK @ 2ND FLR.

DYMENT RESIDENCE
829 POMONA AVE.
ALBANY, CA. 94706

SHEET 4 OF 4