## CD DRAWING SIGN-OFF

DATE: TIME: % CWC-PLEASE RETURN BY:

| COMPLETE Wireless Consulting, Inc. | SIGNATURE | DATE |
|---|---|---|
| SITE ACQUISITION: | | |
| PLANNING: | | |
| CONSTRUCTION: | | |
| MANAGEMENT: | | |

| verizon WIRELESS | SIGNATURE | DATE |
|---|---|---|
| CONSTRUCTION: | | |
| RF ENGINEER: | | |
| MW ENG./TRANSPORT: | | |
| EQUIPMENT ENGINEER: | | |

**OTHER** (IF APPLICABLE)

| SIGNATURE | DATE |
|---|---|
| | |

## GENERAL NOTES

1. DRAWINGS ARE NOT TO BE SCALED, WRITTEN DIMENSIONS TAKE PRECEDENCE, AND THIS SET OF PLANS IS INTENDED TO BE USED FOR DIAGRAMMATIC PURPOSES ONLY, UNLESS NOTED OTHERWISE. THE GENERAL CONTRACTOR'S SCOPE OF WORK SHALL INCLUDE FURNISHING ALL MATERIALS, EQUIPMENT, LABOR AND ANYTHING ELSE DEEMED NECESSARY TO COMPLETE INSTALLATIONS AS DESCRIBED HEREIN.
2. PRIOR TO THE SUBMISSION OF BIDS, THE CONTRACTORS INVOLVED SHALL VISIT THE JOB SITE AND FAMILIARIZE THEMSELVES WITH ALL CONDITIONS AFFECTING THE PROPOSED PROJECT, WITH THE CONSTRUCTION AND CONTRACT DOCUMENTS, FIELD CONDITIONS AND CONFIRM THAT THE PROJECT MAY BE ACCOMPLISHED AS SHOWN PRIOR TO PROCEEDING WITH CONSTRUCTION. ANY ERRORS, OMISSIONS, OR DISCREPANCIES ARE TO BE BROUGHT TO THE ATTENTION OF THE ARCHITECT/ ENGINEER.
3. THE GENERAL CONTRACTOR SHALL RECEIVE WRITTEN AUTHORIZATION TO PROCEED WITH CONSTRUCTION PRIOR TO STARTING WORK ON ANY ITEM NOT CLEARLY DEFINED BY THE CONSTRUCTION DRAWINGS/CONTRACT DOCUMENTS.
4. THE CONTRACTOR SHALL SUPERVISE AND DIRECT THE PROJECT DESCRIBED HEREIN. THE CONTRACTOR SHALL BE SOLELY RESPONSIBLE FOR ALL CONSTRUCTION MEANS, METHODS, TECHNIQUES, SEQUENCES, AND PROCEDURES AND FOR COORDINATING ALL PORTIONS OF THE WORK UNDER THE CONTRACT.
5. THE CONTRACTOR SHALL INSTALL ALL EQUIPMENT AND MATERIALS ACCORDING TO MANUFACTURER'S/VENDOR'S SPECIFICATIONS UNLESS NOTED OTHERWISE OR WHERE LOCAL CODES OR ORDINANCES TAKE PRECEDENCE.
6. ALL WORK PERFORMED ON PROJECT AND MATERIALS INSTALLED SHALL BE IN STRICT ACCORDANCE WITH ALL APPLICABLE CODES, REGULATIONS, AND ORDINANCES. CONTRACTOR SHALL GIVE ALL NOTICES AND COMPLY WITH ALL LAWS, ORDINANCES, RULES, REGULATIONS, AND LAWFUL ORDERS OF ANY PUBLIC AUTHORITY, MUNICIPAL AND UTILITY COMPANY SPECIFICATIONS, AND LOCAL AND STATE JURISDICTIONAL CODES BEARING ON THE PERFORMANCE OF THE WORK.
7. GENERAL CONTRACTOR SHALL PROVIDE AT THE PROJECT SITE A FULL SET OF CONSTRUCTION DOCUMENTS UPDATED WITH THE LATEST REVISIONS AND ADDENDUMS OR CLARIFICATIONS FOR THE USE BY ALL PERSONNEL INVOLVED WITH THE PROJECT.
8. THE STRUCTURAL COMPONENTS OF THIS PROJECT SITE/FACILITY ARE NOT TO BE ALTERED BY THIS CONSTRUCTION PROJECT UNLESS NOTED OTHERWISE.
9. DETAILS HEREIN ARE INTENDED TO SHOW END RESULT OF DESIGN. MINOR MODIFICATIONS MAY BE REQUIRED TO SUIT JOB CONDITIONS OR SITUATIONS, AND SUCH MODIFICATIONS SHALL BE INCLUDED AS PART OF THE SCOPE OF WORK.
10. SEAL PENETRATIONS THROUGH FIRE-RATED AREAS WITH U.L. LISTED OR FIRE MARSHALL APPROVED MATERIALS IF APPLICABLE TO THIS FACILITY AND OR PROJECT SITE.
11. THE CONTRACTOR SHALL MAKE NECESSARY PROVISIONS TO PROTECT EXISTING IMPROVEMENTS, EASEMENTS, PAVING, CURBING, ETC. DURING CONSTRUCTION. UPON COMPLETION OF WORK, CONTRACTOR SHALL REPAIR ANY DAMAGE THAT MAY HAVE OCCURRED DUE TO THE CONSTRUCTION ON OR ABOUT THE PROPERTY.
12. CONTRACTOR SHALL SEE TO IT THAT GENERAL WORK AREA IS KEPT CLEAN AND HAZARD FREE DURING CONSTRUCTION AND DISPOSE OF ALL DIRT, DEBRIS, RUBBISH AND REMOVE EQUIPMENT NOT SPECIFIED AS REMAINING ON THE PROPERTY. PREMISES SHALL BE LEFT IN CLEAN CONDITION AND FREE FROM PAINT SPOTS, DUST, OR SMUDGES OF ANY NATURE.
13. THE ARCHITECTS/ENGINEERS HAVE MADE EVERY EFFORT TO SET FORTH IN THE CONSTRUCTION AND CONTRACT DOCUMENTS THE COMPLETE SCOPE OF WORK. CONTRACTORS BIDDING THE JOB ARE NEVERTHELESS CAUTIONED THAT MINOR OMISSIONS OR ERRORS IN THE DRAWINGS AND OR SPECIFICATIONS SHALL NOT EXCUSE SAID CONTRACTOR FROM COMPLETING THE PROJECT AND IMPROVEMENTS IN ACCORDANCE WITH THE INTENT OF THESE DOCUMENTS. THE BIDDER SHALL BEAR THE RESPONSIBILITY OF NOTIFYING (IN WRITING) THE ARCHITECT/ENGINEER OF ANY CONFLICTS, ERRORS, OR OMISSIONS PRIOR TO THE SUBMISSION OF CONTRACTOR'S PROPOSAL. IN THE EVENT OF DISCREPANCIES THE CONTRACTOR SHALL PRICE THE MORE COSTLY OR EXTENSIVE WORK, UNLESS DIRECTED OTHERWISE.

verizon WIRELESS

2785 Mitchell Drive, Walnut Creek, CA 94598

# GOLDEN GATE FIELDS
# PCS PROJECT

## 1100 EASTSHORE HIGHWAY (A.K.A. BUCHANAN ST.)
## ALBANY, CA 94706
## APN: 066-2680-003-01
## LOCATION #: 123761
## PROJECT #: 20151246761

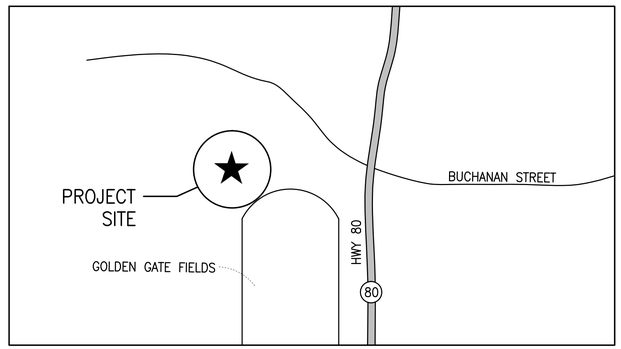


ALBANY, CA

LOCATION PLAN

## DIRECTIONS

FROM VERIZON OFFICE @ 2785 MITCHELL DRIVE, WALNUT CREEK, CA 94598:

1. HEAD NORTHEAST ON MITCHELL DR TOWARD OAK GROVE RD
2. TAKE THE 1ST LEFT ONTO OAK GROVE RD
3. TURN LEFT ONTO TREAT BLVD
4. TURN RIGHT ONTO N MAIN ST
5. TURN RIGHT ONTO THE INTERSTATE 680 S RAMP TO OAKLAND/SAN JOSE
6. MERGE ONTO I-680 S
7. TAKE THE CALIFORNIA 24 EXIT TOWARD LAFAYETTE/OAKLAND
8. MERGE ONTO CA-24 W
9. TAKE THE INTERSTATE 580 W EXIT
10. MERGE ONTO I-580 W
11. MERGE ONTO I-580 W/I-80 E
12. TAKE THE BUCHANAN ST EXIT TOWARD ALBANY
13. TURN LEFT ONTO BUCHANAN ST
14. TURN RIGHT ONTO BUCHANAN STREET EXTENSION

## PROJECT MILESTONES

| | |
|---|---|
| 07/22/2015 | 90% CONSTRUCTION DOCUMENTS |
| 08/12/2015 | 95% CONSTRUCTION DOCUMENTS |
| 09/10/2015 | 96% CONSTRUCTION DOCUMENTS |
| 10/01/2015 | 100% CONSTRUCTION DOCUMENTS |
| 02/15/2016 | 100% CONSTRUCTION DOCUMENTS REV 1 |

## PROJECT DIRECTORY


LANDLORD:
GOLDEN GATE LAND HOLDINGS
285 W. HUNTINGTON DR.
ARCADIA, CA 91007

APPLICANT:
VERIZON WIRELESS
2785 MITCHELL DRIVE
WALNUT CREEK, CA 94598

CONSTRUCTION MANAGER:
TO BE DETERMINED

ARCHITECT:
MANUEL S. TSIHLAS
MST ARCHITECTS, INC.
1520 RIVER PARK DRIVE
SACRAMENTO, CA 95815
916-567-9630
manuel@mstarchitects.com


## PROJECT SUMMARY

| | |
|---|---|
| ASSESSOR'S PARCEL NUMBER: | 066-2680-003-01 |
| JURISDICTION: | CITY OF ALBANY |
| OCCUPANCY: | U (UNMANNED TELECOMMUNICATIONS FACILITY) |
| TYPE OF CONSTRUCTION: | V-B |
| ZONING: | N/A |

## CODE COMPLIANCE

ALL WORK AND MATERIALS SHALL BE PERFORMED AND INSTALLED IN ACCORDANCE WITH THE CURRENT EDITIONS OF THE FOLLOWING CODES AS ADOPTED BY THE LOCAL GOVERNING AUTHORITIES. NOTHING IN THESE PLANS IS TO BE CONSTRUED TO PERMIT WORK NOT CONFORMING TO THESE CODES:

2013 CALIFORNIA BUILDING STANDARDS CODE, TITLE 24, CALIFORNIA CODE OF REGULATIONS INCLUDING SUPPLEMENTS EFFECTIVE JULY 1, 2015

| | |
|---|---|
| PART 1 | CALIFORNIA BUILDING STANDARDS ADMINISTRATIVE CODE |
| PART 2 | CALIFORNIA BUILDING CODE |
| PART 2.5 | CALIFORNIA RESIDENTIAL BUILDING CODE |
| PART 3 | CALIFORNIA ELECTRICAL CODE |
| PART 4 | CALIFORNIA MECHANICAL CODE |
| PART 5 | CALIFORNIA PLUMBING CODE |
| PART 6 | CALIFORNIA ENERGY CODE |
| PART 8 | CALIFORNIA HISTORICAL BUILDING CODE |
| PART 9 | CALIFORNIA FIRE CODE |
| PART 10 | CALIFORNIA EXISTING BUILDING CODE |
| PART 11 | CALIFORNIA GREEN BUILDING STANDARDS CODE |
| PART 12 | CALIFORNIA REFERENCE STANDARDS CODE |

LOCAL COUNTY OR CITY ORDINANCES

ACCESSIBILITY REQUIREMENTS: THIS FACILITY IS UNMANNED AND NOT FOR HUMAN HABITATION. ACCESSIBILITY NOT REQUIRED IN ACCORDANCE WITH THE 2013 CBC 11B-203.5, AND 11B-202.4 EXCEPTION 7.

## PROJECT DESCRIPTION

PROPOSED MODIFICATION OF AN EXISTING VERIZON WIRELESS TELECOMMUNICATIONS FACILITY, INCLUDING, PROJECT ASSUMES INSTALLATION OF PENDING AWS PROJECT:

- REMOVE (6) EXISTING VERIZON WIRELESS ANTENNAS & REPLACE W/ (6) NEW VERIZON WIRELESS ANTENNAS ON NEW PIPE MOUNTS.

- RE-USE (3) EXISTING VERIZON WIRELESS LTE ANTENNAS FOR 850, (1) PER SECTOR, ON EXISTING PIPE MOUNTS.

- INSTALL (6) NEW VERIZON WIRELESS A2 BACKPACKS ON EXISTING AWS RRH UNITS, (1) PER UNIT OR REPLACE EXISTING RRUS-12 W/ NEW RRUS-32.

- INSTALL (2) NEW VERIZON WIRELESS RAYCAP SURGE PROTECTORS (DC-3315), (1) @ SHELTER & (1) @ ANTENNAS.

- INSTALL (1) NEW VERIZON WIRELESS HYBRID TRUNK CABLE ALONG EXISTING CABLE ROUTE.

NOTE: ADJUST AZIMUTHS IN SECTORS B.

NOTE: VERIZON WIRELESS ANTENNAS & EQUIPMENT TO BE PAINTED TO MATCH.

## INDEX OF DRAWINGS


| | | |
|---|---|---|
| 1. | T1.1 | TITLE SHEET, LOCATION PLAN, PROJECT DATA |
| 2. | A1.1 | OVERALL SITE PLAN, ANTENNA LAYOUT PLANS |
| 3. | A2.0 | EXISTING PROJECT ELEVATIONS |
| 4. | A2.1 | PROPOSED PROJECT ELEVATIONS |
| 5. | A3.1 | CONSTRUCTION DETAILS |
| 6. | A3.2 | RF SIGNAGE LOCATION PLAN |
| 7. | A3.3 | EQUIPMENT SPECIFICATIONS |



COMPLETE Wireless Consulting, Inc.

MST ARCHITECTS WIRELESS DIVISION
1520 River Park Drive, Sacramento, CA 95815
916-567-9630
www.MSTArchitects.com



THESE DRAWINGS AND SPECIFICATIONS, AS INSTRUMENTS OF SERVICE, ARE AND SHALL REMAIN THE PROPERTY OF MST ARCHITECTS, INC. WHEREVER THE PROJECTS FOR WHICH THEY WERE PREPARED ARE NOT PUBLISHED, THE REPRODUCTION, COPYING OR OTHER USE OF THESE DRAWINGS AND SPECIFICATIONS WITHOUT THE WRITTEN CONSENT OF THE ARCHITECT, COPYRIGHT MST ARCHITECTS, INC. ALL RIGHTS RESERVED.


verizon WIRELESS

GOLDEN GATE FIELDS
PCS PROJECT
1100 EASTSHORE HWY
ALBANY, CA 94706

SHEET TITLE: TITLE SHEET, LOCATION PLAN, PROJECT DATA

LICENSED ARCHITECT
MANUEL S. TSIHLAS
No. C-28021
Exp. 08-17
STATE OF CALIFORNIA
Not valid unless signed in ink by licensee.

Revisions:
1 02/15/16
2 --
3 --
4 --
5 --

File: 162.1610_T11.dwg
Drawn By: CTC
Checked By: ALB
Scale: AS NOTED
Date: 02/15/16

Job No. 162.1610

T1.1

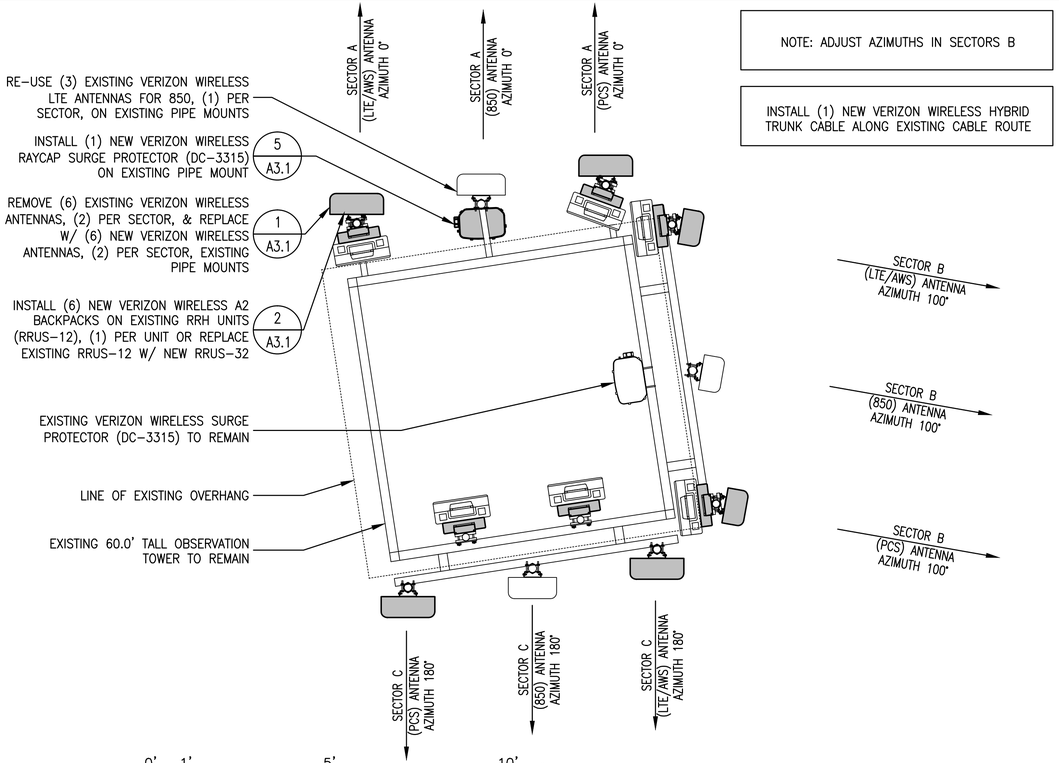


3 A1.1 PROPOSED ANTENNA LAYOUT PLAN
SCALE: 1/2" = 1'-0"

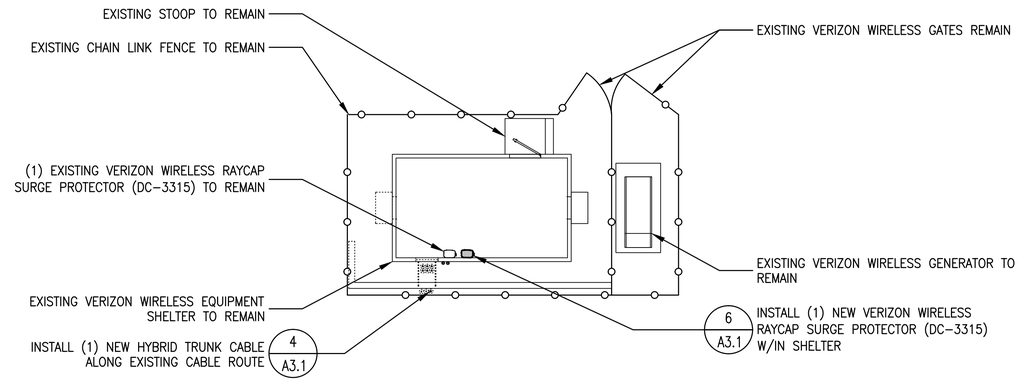


4 A1.1 ENLARGED EQUIPMENT LAYOUT PLAN @ SHELTER
SCALE: 1/8" = 1'-0"

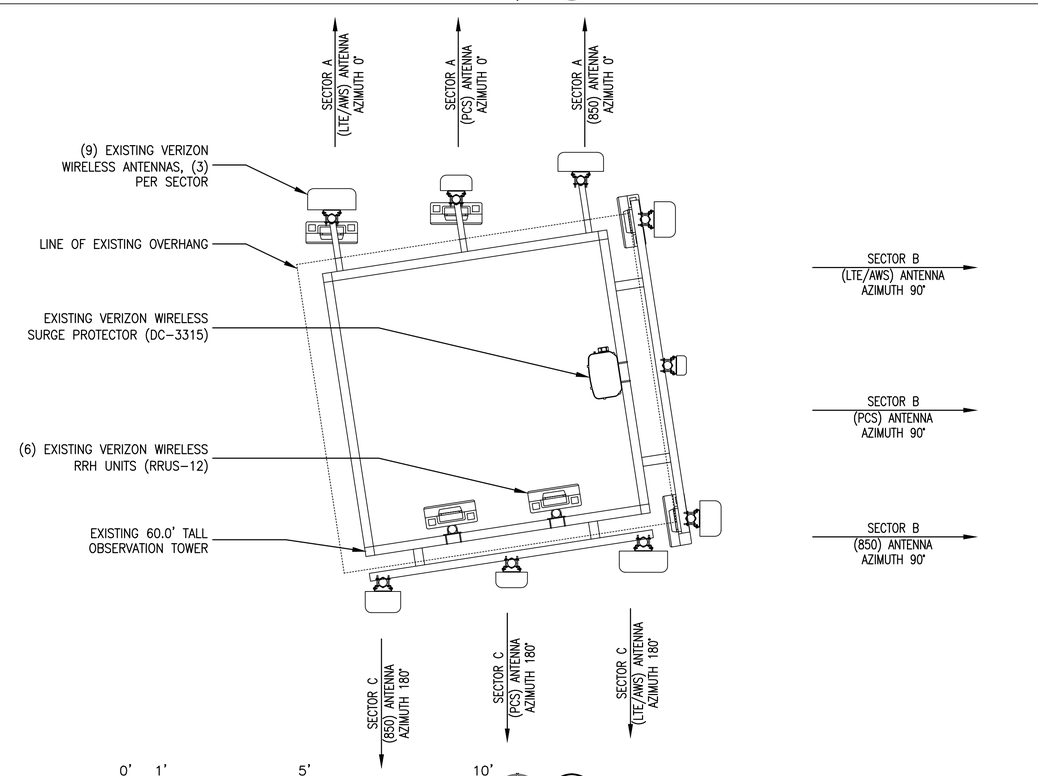


2 A1.1 EXISTING ANTENNA LAYOUT PLAN
SCALE: 1/2" = 1'-0"

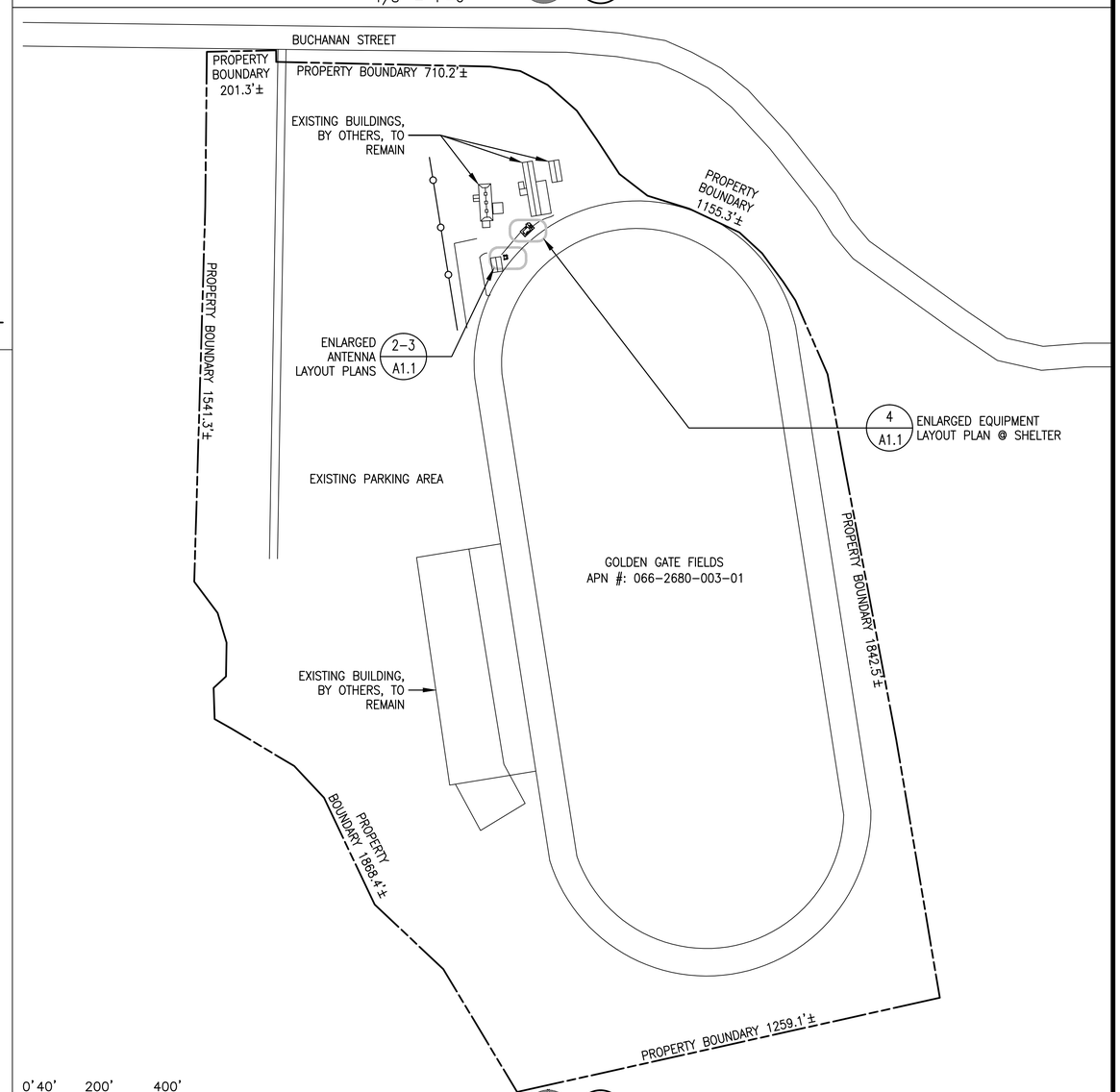


1 A1.1 OVERALL SITE PLAN
SCALE: 1" = 200.0'


COMPLETE Wireless Consulting, Inc.

MST ARCHITECTS
WIRELESS DIVISION
1520 River Park Drive, Sacramento, CA 95815
916-567-9630
www.MSTArchitects.com



THESE DRAWINGS AND SPECIFICATIONS, AS INSTRUMENTS OF SERVICE, ARE AND SHALL REMAIN THE PROPERTY OF MST ARCHITECTS, INC. WHETHER THE PROJECT FOR WHICH THEY WERE MADE EXISTS OR NOT. THEY ARE NOT TO BE USED BY OTHERS EXCEPT WITH THE WRITTEN CONSENT OF THE ARCHITECT. THEY ARE NOT TO BE USED BY ANY PERSON ON OTHER PROJECTS WITHOUT WRITTEN CONSENT OF THE ARCHITECT. COPYRIGHT MST ARCHITECTS, INC. ALL RIGHTS RESERVED.


GOLDEN GATE FIELDS
PCS PROJECT
1100 EASTSHORE HWY
ALBANY, CA 94706

verizon WIRELESS

SHEET TITLE: OVERALL SITE PLAN, ANTENNA LAYOUT PLANS

LICENSED ARCHITECT
MANUEL S. TSIHLAS
No. C-28021
Exp. 08-17
STATE OF CALIFORNIA
Not valid unless signed in ink by licensee.

| Revisions: |
|---|
| 1 02/15/16 |
| 2 -- |
| 3 -- |
| 4 -- |
| 5 -- |

| |
|---|
| File: 162.1610_A11.dwg |
| Drawn By: CTC |
| Checked By: ALB |
| Scale: AS NOTED |
| Date: 02/15/16 |

Job No. 162.1610

A1.1

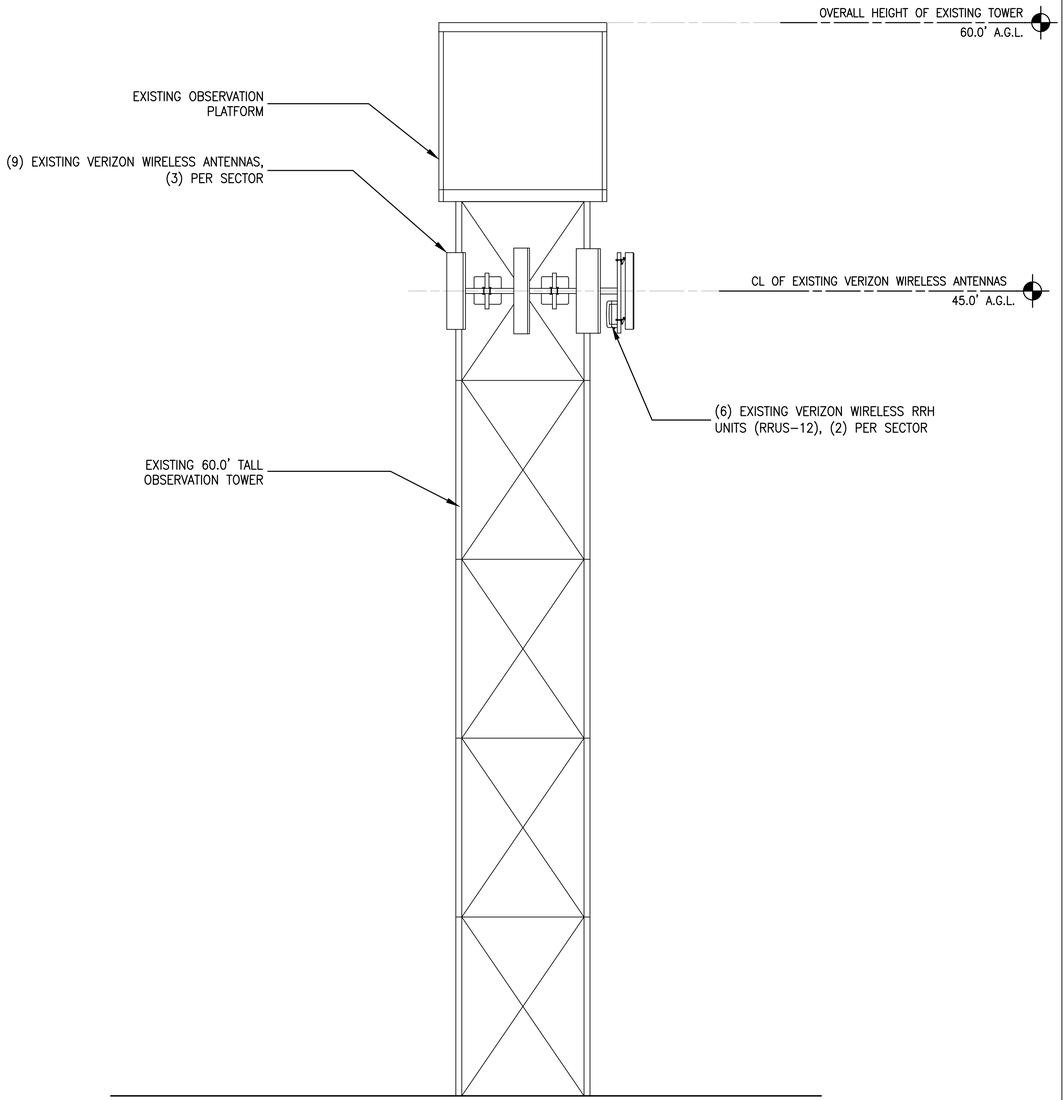


2 A2.0 EXISTING SOUTH ELEVATION
SCALE: 1/4" = 1'-0"

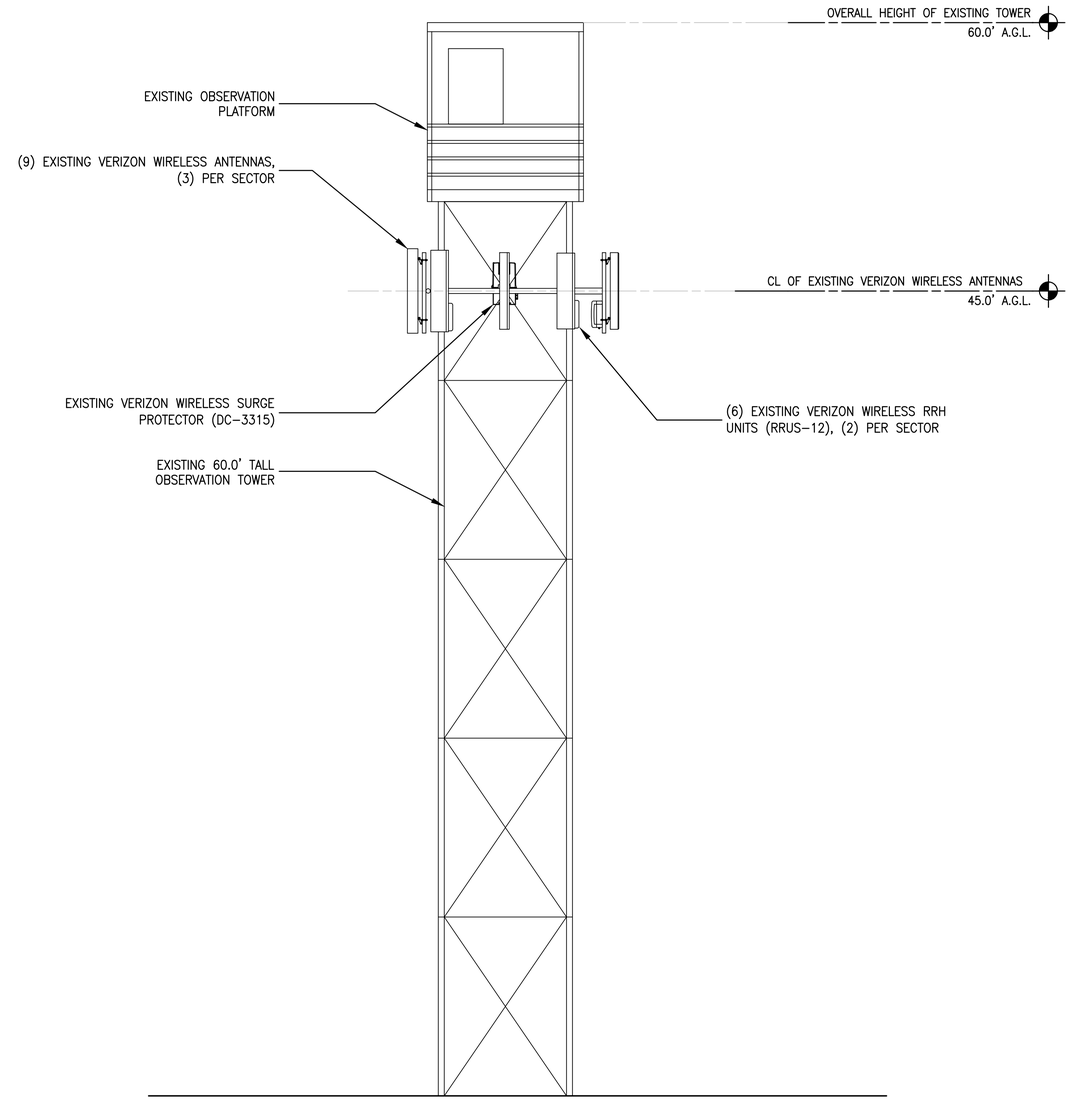


1 A2.0 EXISTING EAST ELEVATION
SCALE: 1/4" = 1'-0"

MST ARCHITECTS
WIRELESS DIVISION
1520 River Park Drive, Sacramento, CA 95815
916-567-9630
www.MSTArchitects.com

COMPLETE Wireless Consulting, Inc.

THESE DRAWINGS AND SPECIFICATIONS, AS INSTRUMENTS OF SERVICE, ARE AND SHALL REMAIN THE PROPERTY OF MST ARCHITECTS, INC., WHETHER THE PROJECTS FOR WHICH THEY ARE MADE ARE EXECUTED OR NOT. THESE DRAWINGS AND SPECIFICATIONS SHALL NOT BE USED BY ANY PERSON OR ENTITY ON OTHER PROJECTS WITHOUT PRIOR WRITTEN CONSENT OF THE ARCHITECT. COPYRIGHT, MST ARCHITECTS, INC. ALL RIGHTS RESERVED.

verizon WIRELESS

GOLDEN GATE FIELDS
PCS PROJECT
1100 EASTSHORE HWY
ALBANY, CA 94706

SHEET TITLE: EXISTING PROJECT ELEVATIONS

LICENSED ARCHITECT
MANUEL S. TSIHLAS
No. C-28021
Exp. 08-17
STATE OF CALIFORNIA
Not valid unless signed in ink by licensee.

Revisions:
1 02/15/16
2 --
3 --
4 --
5 --

File: 162.1610_A20.dwg
Drawn By: CTC
Checked By: ALB
Scale: AS NOTED
Date: 02/15/16

Job No. 162.1610

A2.0

NOTE: ADJUST AZIMUTHS IN SECTORS B

NOTE: VERIZON WIRELESS ANTENNAS & EQUIPMENT TO BE PAINTED TO MATCH

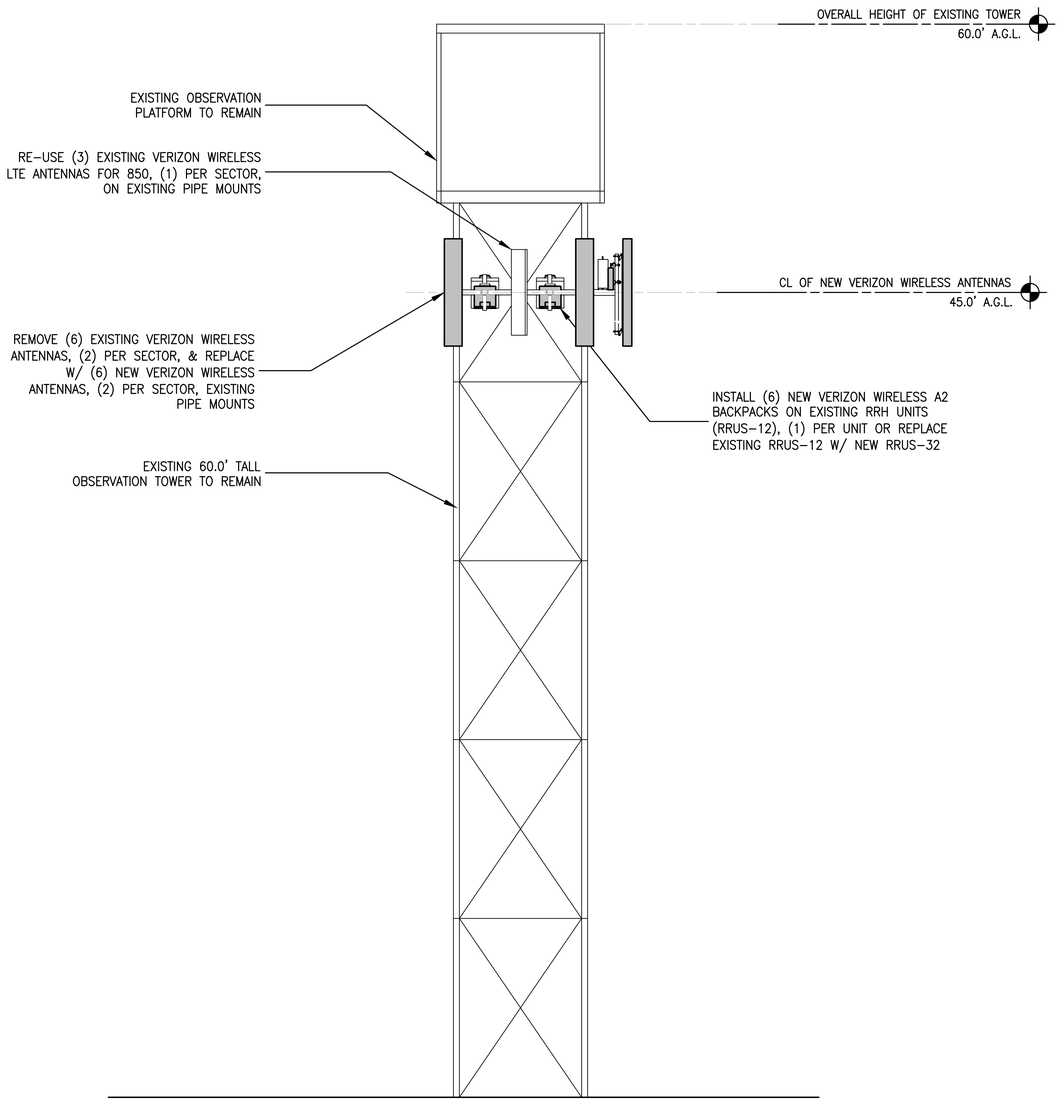


2 A2.1 PROPOSED SOUTH ELEVATION
SCALE: 1/4" = 1'-0"

NOTE: ADJUST AZIMUTHS IN SECTORS B

NOTE: VERIZON WIRELESS ANTENNAS & EQUIPMENT TO BE PAINTED TO MATCH

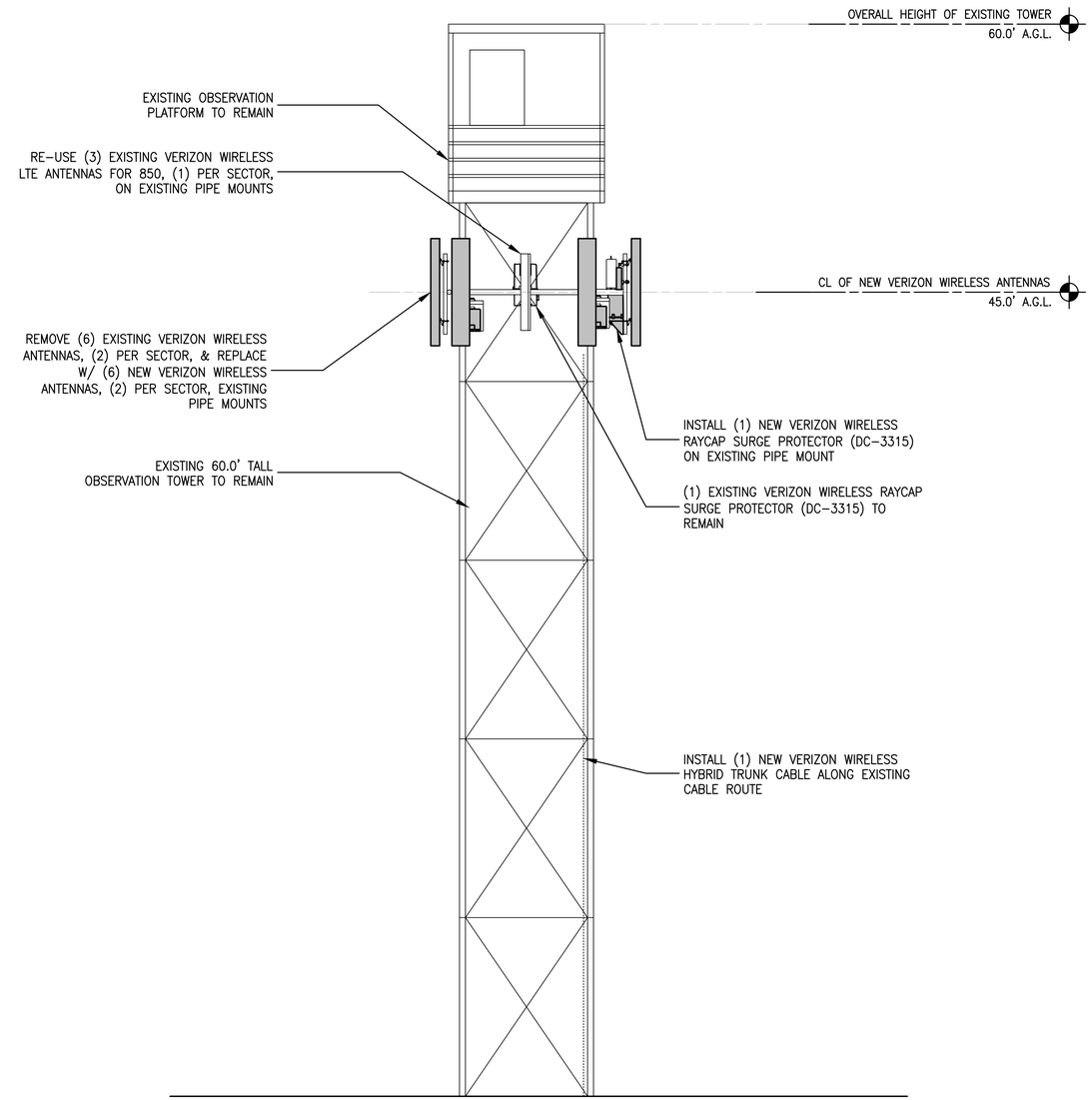


1 A2.1 PROPOSED EAST ELEVATION
SCALE: 1/4" = 1'-0"


MST ARCHITECTS
WIRELESS DIVISION
1520 River Park Drive, Sacramento, CA 95815
916-567-9630
www.MSTArchitects.com


COMPLETE Wireless Consulting, Inc.


THESE DRAWINGS AND SPECIFICATIONS, AS INSTRUMENTS OF SERVICE, ARE AND SHALL REMAIN THE PROPERTY OF MST ARCHITECTS, INC. WHETHER THE PROJECT FOR WHICH THEY WERE MADE EXISTS OR NOT. THE REPRODUCTION, ALTERATION OR REPUBLICATION OF THESE DRAWINGS AND SPECIFICATIONS, IN WHOLE OR IN PART, WITHOUT WRITTEN CONSENT OF THE ARCHITECT, COPYRIGHT MST ARCHITECTS, INC. ALL RIGHTS RESERVED.


verizon WIRELESS

GOLDEN GATE FIELDS
PCS PROJECT
1100 EASTSHORE HWY
ALBANY, CA 94706

SHEET TITLE: PROPOSED PROJECT ELEVATIONS

LICENSED ARCHITECT
MANUEL S. TSIHLAS
No. C-28021
Exp. 08-17
STATE OF CALIFORNIA
Not valid unless signed in ink by licensee.

| Revisions: |
|---|
| 1 02/15/16 |
| 2 -- |
| 3 -- |
| 4 -- |
| 5 -- |

File: 162.1610_A21.dwg
Drawn By: CTC
Checked By: ALB
Scale: AS NOTED
Date: 02/15/16

Job No. 162.1610

A2.1

| SECTOR INFORMATION | | | ANTENNA LAYOUT SUMMARY | | | | | | | | ANTENNA CABLE SUMMARY | | | |
|---|---|---|---|---|---|---|---|---|---|---|---|---|---|---|
| SECTOR | CENTERLINE | EXISTING AZIMUTH | TECH | EXISTING CONDITIONS | ANTENNA SPECIFICATIONS | PROPOSED CHANGES | NEW AZIMUTH | TECH | POST MODIFICATION | ANTENNA SPECIFICATIONS | LENGTH | EXISTING CONDITIONS | PROPOSED CHANGES | POST MODIFICATION |
| A | 45.0' | 0° | LTE/AWS | SBNH-1D4545A | D 7.1",L 56.7", W 16.2" & WEIGHT = 39.7 LBS | REPLACE | 0° | LTE/AWS | SBNH-1D45B | D 7.0",L 72.0", W 18.0" & WEIGHT = 64.4 LBS | 195.0'± | (18) 7/8" (1) HYBRID TRUNK CABLE | ADD (1) HYBRID TRUNK CABLE | (18) 7/8" (2) HYBRID TRUNK CABLE |
| | | 0° | 850 | LNX-4514DS-A1M | D 6.4",L 51.5", W 15.3" & WEIGHT = 29.3 LBS | RE-USE LTE | 0° | 850 | SBNH-1D4545A | D 7.1",L 56.7", W 16.2" & WEIGHT = 39.7 LBS | 195.0'± | | | |
| | | 0° | PCS | HBX-4517DS-A1M | D 5.2",L 57.5", W 10.6" & WEIGHT = 28.0 LBS | REPLACE | 0° | PCS | SBNH-1D45B | D 7.0",L 72.0", W 18.0" & WEIGHT = 64.4 LBS | 195.0'± | | | |
| B | 45.0' | 90° | LTE/AWS | SBNH-1D6565A | D 7.1",L 56.7", W 16.2" & WEIGHT = 39.7 LBS | REPLACE | 100° | LTE/AWS | SBNHH-1D65B | D 7.1",L 72.9", W 11.9" & WEIGHT = 40.6 LBS | 195.0'± | | | |
| | | 90° | 850 | LNX-6513DS-A1M | D 6.4",L 51.5", W 15.3" & WEIGHT = 29.3 LBS | RE-USE LTE | 100° | 850 | SBNH-1D6565A | D 7.1",L 50.9", W 11.9" & WEIGHT = 32.0 LBS | 195.0'± | | | |
| | | 90° | PCS | HBX-6516DS-A1M | D 5.2",L 57.5", W 10.6" & WEIGHT = 28.0 LBS | REPLACE | 100° | PCS | SBNHH-1D65B | D 7.1",L 72.9", W 11.9" & WEIGHT = 40.6 LBS | 195.0'± | | | |
| C | 45.0' | 180° | LTE/AWS | SBNH-1D4545A | D 7.1",L 56.7", W 16.2" & WEIGHT = 39.7 LBS | REPLACE | 180° | LTE/AWS | SBNHH-1D45B | D 7.0",L 72.0", W 18.0" & WEIGHT = 64.4 LBS | 195.0'± | | | |
| | | 180° | 850 | LNX-4514DS-A1M | D 6.4",L 51.5", W 15.3" & WEIGHT = 29.3 LBS | RE-USE LTE | 180° | 850 | SBNH-1D4545A | D 7.1",L 56.7", W 16.2" & WEIGHT = 39.7 LBS | 195.0'± | | | |
| | | 180° | PCS | HBX-4517DS-A1M | D 5.2",L 57.5", W 10.6" & WEIGHT = 28.0 LBS | REPLACE | 180° | PCS | SBNHH-1D45B | D 7.0",L 72.0", W 18.0" & WEIGHT = 64.4 LBS | 195.0'± | | | |
| EXISTING ANTENNA CONFIGURATION: | | | | 9 | ANTENNAS POST MODIFICATION: | | | | 9 | | | | | |
| | | | | | | | | | | | | ANTENNA CABLES POST MODIFICATION: | | 20 |

NOTES:

1. PROVIDE (1) NEW HYBRID TRUNK CABLE FROM EQUIPMENT AREA TO ANTENNAS.
2. (2) EXISTING GPS ANTENNAS & CABLES TO REMAIN.
3. FURNISH ALL NEW ANTENNAS WITH DOWNTILT BRACKETS, COORDINATE REQUIRED DOWNTILT FOR EACH ANTENNA WITH RF E4. PROVIDE 1/2" DIAMETER COAXIAL JUMPER CABLE FROM ANTENNA TO MAIN COAXIAL CABLE.
5. MODEL NUMBERS PROVIDED ARE SUBJECT TO VERIFICATION WITH THE RF ENGINEER PRIOR TO INSTALLATION.
6. RET CONTROL FROM AWS RRU (EA.) SECTOR & DAISY CHAIN WITHIN SECTOR

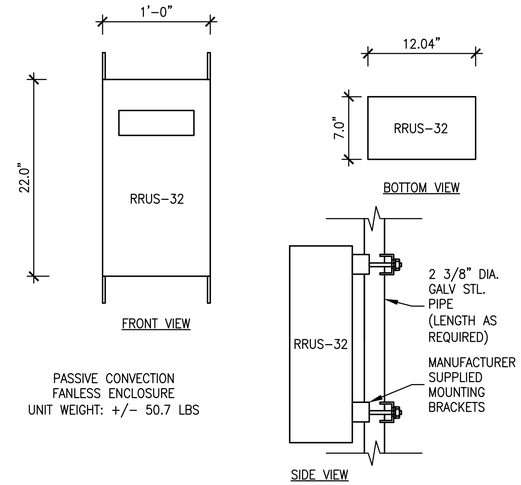


7 A3.1 RRUS32 MOUNTING DETAIL
SCALE: 1-1/2" = 1'-0"

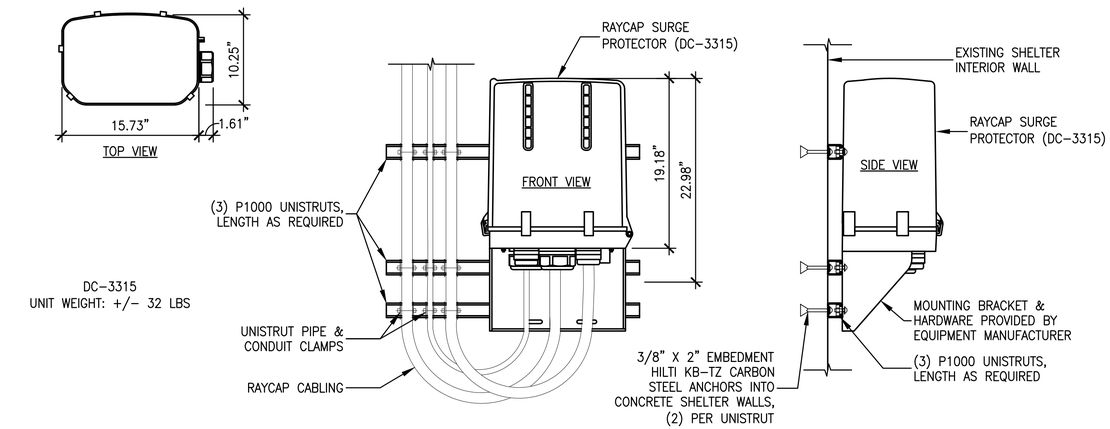


6 A3.1 RAYCAP SURGE PROTECTOR @ SHELTER DC-3315
SCALE: 1-1/2" = 1'-0"

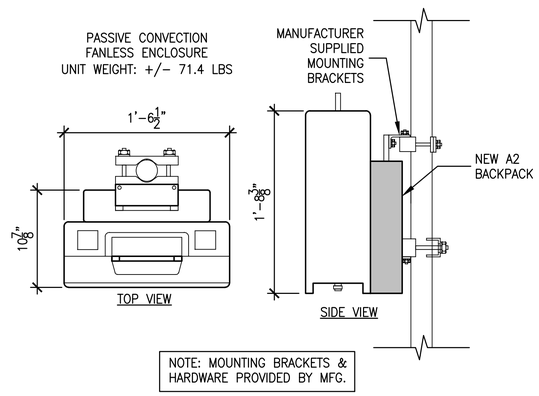


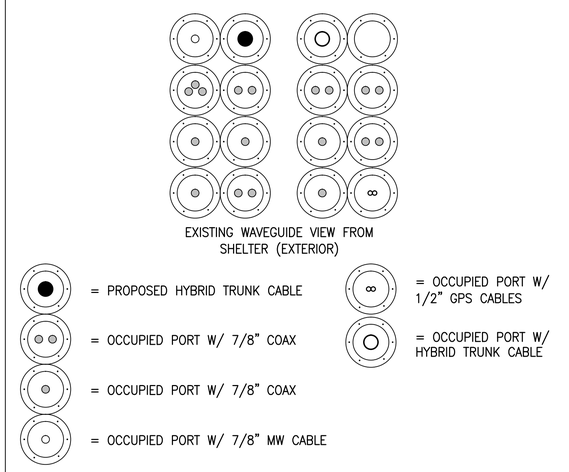


3 A3.1 WAVEGUIDE DIAGRAM
SCALE: 1-1/2" = 1'-0"

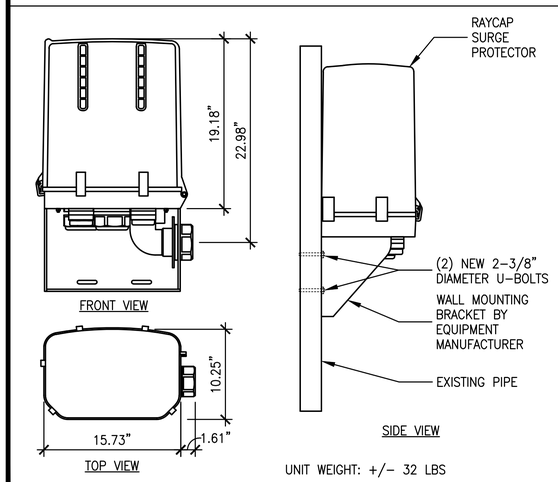


5 A3.1 RAYCAP SURGE PROTECTOR @ SHELTER DC-3315
SCALE: 1-1/2" = 1'-0"

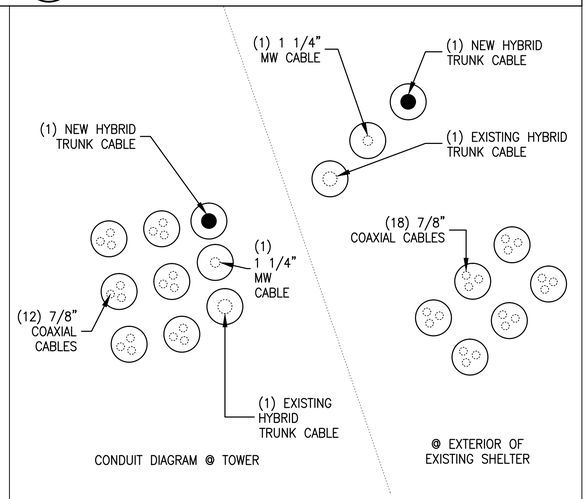


4 A3.1 UNDERGROUND CONDUIT DIAGRAM
SCALE: 1-1/2" = 1'-0"

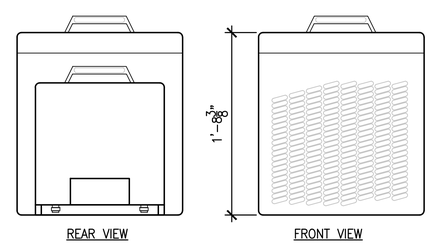


RRUS12 W/RRUS A2 BACKPACK NOTES:

TO ENSURE ADEQUATE AIRFLOW BETWEEN UNITS:

- ALLOW A MINIMUM OF 15.75" VERTICAL SEPARATION BETWEEN RRU'S.
- ALLOW A MINIMUM OF 19.68" VERTICAL SEPARATION BETWEEN RRU AND ANTENNA.
- ALLOW A MINIMUM OF 7.87" HORIZONTAL SEPARATION BETWEEN RRU'S.
- THE MINIMUM DISTANCE FROM THE BOTTOM OF THE RRU TO THE FLOOR IS 11.8".

2 A3.1 RRUS12 W/A2 BACKPACK DETAIL
SCALE: 1-1/2" = 1'-0"

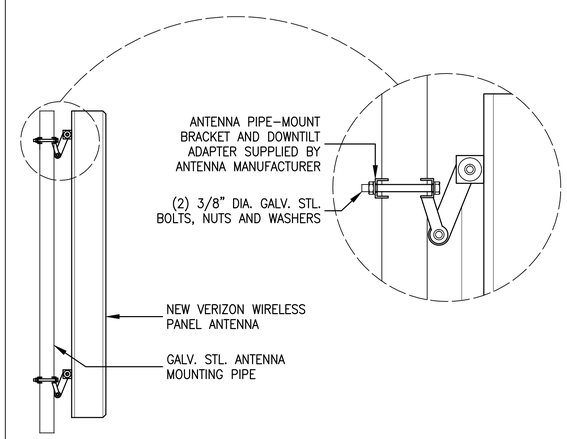


1 A3.1 ANTENNA MOUNT DETAIL
SCALE: 1" = 1'-0"


COMPLETE Wireless Consulting, Inc.

MST ARCHITECTS WIRELESS DIVISION
1520 River Park Drive, Sacramento, CA 95815
916-567-9630
www.MSTArchitects.com



THESE DRAWINGS AND SPECIFICATIONS, AS INSTRUMENTS OF SERVICE, ARE AND SHALL REMAIN THE PROPERTY OF MST ARCHITECTS, INC. WHETHER THE PROJECT FOR WHICH THEY WERE MADE IS EXECUTED OR NOT. THE REPRODUCTION, PUBLICATION OR USE OF THESE DRAWINGS AND SPECIFICATIONS BY OTHERS, EXCEPT FOR THE USE BY ANY PERSON OR ENTITY IN THEIR PROJECT WITHOUT THE WRITTEN CONSENT OF THE ARCHITECT. COPYRIGHT MST ARCHITECTS, INC. ALL RIGHTS RESERVED.


verizon WIRELESS

GOLDEN GATE FIELDS
PCS PROJECT
1100 EASTSHORE HWY
ALBANY, CA 94706

SHEET TITLE: CONSTRUCTION DETAILS

LICENSED ARCHITECT
MANUEL S. TSIHAS
No. C-28021
Exp. 08-17
STATE OF CALIFORNIA
Not valid unless signed in ink by licensee.

Revisions:
1 02/15/16
2 --
3 --
4 --
5 --

File: 162.1610_A31.dwg
Drawn By: CTC
Checked By: ALB
Scale: AS NOTED
Date: 02/15/16

Job No. 162.1610

A3.1

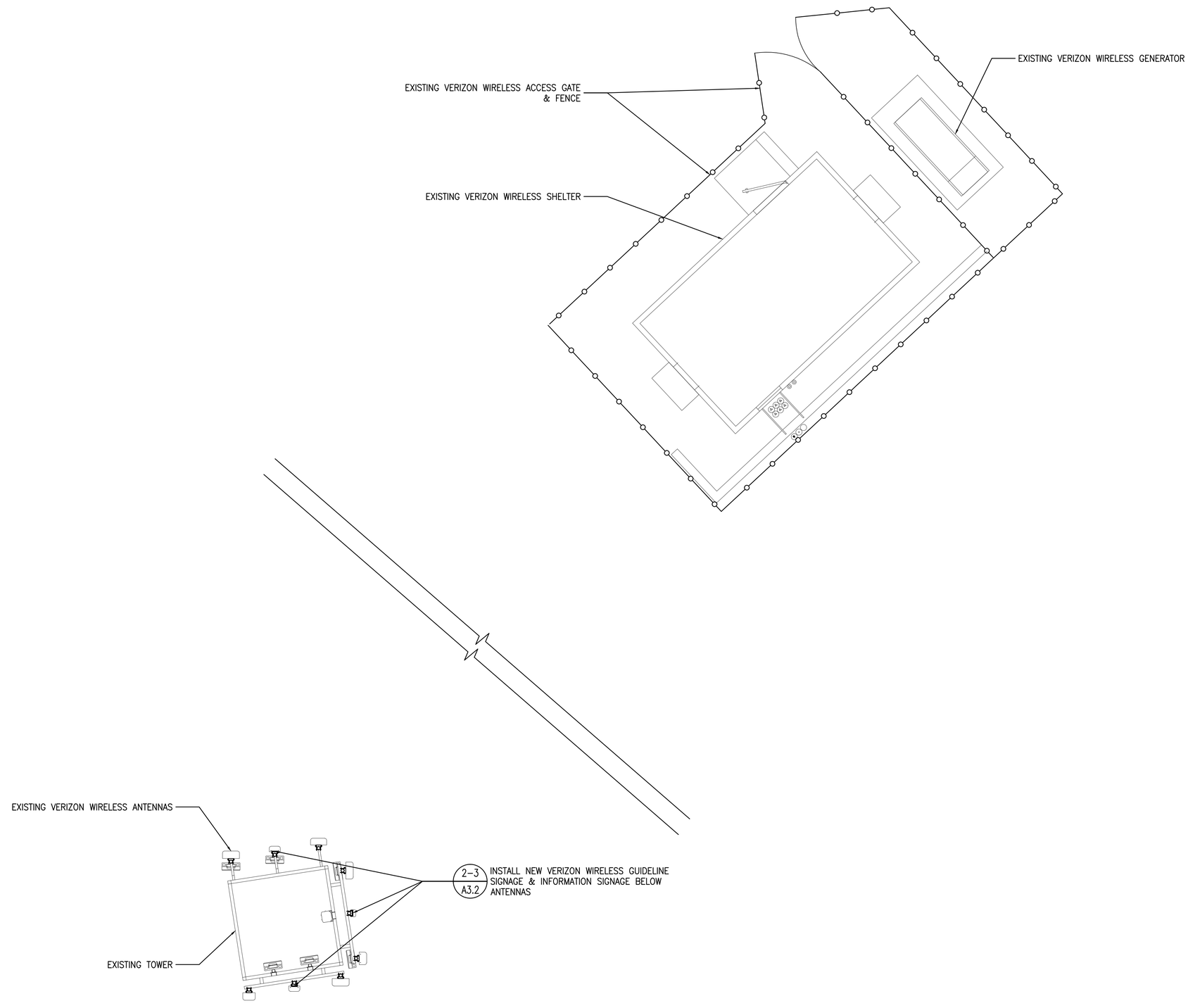


1 A3.2 RF SIGNAGE LAY OUT PLAN
SCALE: 1/4" = 1'-0"

## NOTICE

GUIDELINES FOR WORKING IN RADIOFREQUENCY ENVIRONMENTS

- All personnel should have electromagnetic energy (EME) awareness training.
- All personnel entering this site must be authorized.
- Obey all posted signs.
- Assume all antennas are active.
- Before working on antennas, notify owners and disable appropriate transmitters.
- Maintain minimum 3 feet clearance from all antennas.
- Do not stop in front of antennas.
- Use personal RF monitors while working near antennas.
- Never operate transmitters without shields during normal operation.
- Do not operate base station antennas in equipment rooms.

3 A3.2 RF GUIDELINES SIGN
SCALE: 1/4" = 1'-0"

## INFORMATION

THIS IS A VERIZON WIRELESS ANTENNA SITE

SITE ID: 123761

FOR INFORMATION CALL:
1-800-264-6620

verizon WIRELESS

2 A3.2 EXISTING SITE INFORMATION SIGN
SCALE: NONE

MST ARCHITECTS
WIRELESS DIVISION
1520 River Park Drive, Sacramento, CA 95815
916-567-9630
www.MSTArchitects.com

COMPLETE Wireless Consulting, Inc.

THESE DRAWINGS AND SPECIFICATIONS, AS INSTRUMENTS OF SERVICE, ARE AND SHALL REMAIN THE PROPERTY OF MST ARCHITECTS, INC., WHETHER THE PROJECTS FOR WHICH THEY ARE MADE ARE EXECUTED OR NOT. THESE DRAWINGS AND SPECIFICATIONS SHALL NOT BE USED BY ANY PERSON OR ENTITY ON OTHER PROJECTS WITHOUT PRIOR WRITTEN CONSENT OF THE ARCHITECT. COPYRIGHT, MST ARCHITECTS, INC. ALL RIGHTS RESERVED.

GOLDEN GATE FIELDS
PCS PROJECT
1100 EASTSHORE HWY
ALBANY, CA 94706

verizon WIRELESS

SHEET TITLE: RF SIGNAGE LOCATION PLAN

LICENSED ARCHITECT
MANUEL S. TSIHLAS
No. C-28021
Exp. 08-17
STATE OF CALIFORNIA
Not valid unless signed in ink by licensee.

Revisions:
1 02/15/16
2 --
3 --
4 --
5 --

File: 162.1610A3.2.dwg
Drawn By: ALB
Checked By: ALB
Scale: AS NOTED
Date: 02/15/16

Job No. 162.1610

A3.2

## Product Specifications

COMMSCOPE®

**Uniprise Solutions**
**SBNHH-1D65B**
**Andrew® Tri-band Antenna, 1 x 698–896 MHz and 2 x 1710–2360 MHz, 65° horizontal beamwidth, internal RET**
Interleaved dipole technology providing for attractive, low wind load mechanical package

### Electrical Specifications

| Frequency Band, MHz | 698–806 | 806–896 | 1710–1880 | 1850–1990 | 1920–2180 | 2300–2360 |
|---|---|---|---|---|---|---|
| Gain by all Beam Tilts, average, dBi | 14.5 | 14.3 | 17.4 | 17.9 | 18.2 | 18.3 |
| Gain by all Beam Tilts Tolerance, dB | ±0.5 | ±0.8 | ±0.4 | ±0.3 | ±0.5 | ±0.3 |
| Gain by Beam Tilt, average, dBi | 0 ° \| 14.6<br>7 ° \| 14.6<br>14 ° \| 14.2 | 0 ° \| 14.5<br>7 ° \| 14.4<br>14 ° \| 13.6 | 0 ° \| 17.4<br>3 ° \| 17.5<br>7 ° \| 17.4 | 0 ° \| 17.8<br>3 ° \| 17.9<br>7 ° \| 17.9 | 0 ° \| 18.1<br>3 ° \| 18.3<br>7 ° \| 18.2 | 0 ° \| 18.2<br>3 ° \| 18.4<br>7 ° \| 18.4 |
| Beamwidth, Horizontal, degrees | 68 | 66 | 69 | 66 | 63 | 58 |
| Beamwidth, Horizontal Tolerance, degrees | ±2.2 | ±3.4 | ±2 | ±4.6 | ±5.7 | ±4.3 |
| Beamwidth, Vertical, degrees | 12.1 | 10.7 | 5.6 | 5.2 | 5.0 | 4.5 |
| Beamwidth, Vertical Tolerance, degrees | ±0.8 | ±1 | ±0.3 | ±0.2 | ±0.3 | ±0.2 |
| Beam Tilt, degrees | 0–14 | 0–14 | 0–7 | 0–7 | 0–7 | 0–7 |
| USLS, dB | 16 | 14 | 16 | 16 | 16 | 15 |
| Front-to-Back Total Power at 180° ± 30°, dB | 25 | 26 | 27 | 26 | 26 | 26 |
| CPR at Boresight, dB | 22 | 23 | 21 | 20 | 20 | 22 |
| CPR at Sector, dB | 13 | 11 | 16 | 12 | 11 | 4 |
| Isolation, dB | 25 | 25 | 25 | 25 | 25 | 25 |
| Isolation, Intersystem, dB | 30 | 30 | 30 | 30 | 30 | 30 |
| VSWR \| Return Loss, dB | 1.5 \| 14.0 | 1.5 \| 14.0 | 1.5 \| 14.0 | 1.5 \| 14.0 | 1.5 \| 14.0 | 1.5 \| 14.0 |
| PIM, 3rd Order, 2 x 20 W, dBc | -150 | -150 | -150 | -150 | -150 | -150 |
| Input Power per Port, maximum, watts | 350 | 350 | 350 | 350 | 350 | 300 |
| Polarization | ±45° | ±45° | ±45° | ±45° | ±45° | ±45° |
| Impedance | 50 ohm | 50 ohm | 50 ohm | 50 ohm | 50 ohm | 50 ohm |
| Lightning Protection | dc Ground | dc Ground | dc Ground | dc Ground | dc Ground | dc Ground |

### General Specifications

| | |
|---|---|
| Antenna Brand | Andrew® |
| Antenna Type | DualPol® tri-band |
| Band | Multiband |
| Brand | DualPol® \| Teletilt® |
| Operating Frequency Band | 1710 – 2360 MHz \| 698 – 896 MHz |
| Warranty | Five years |

### Mechanical Specifications

| | |
|---|---|
| Color | Light gray |
| Connector Interface | 7-16 DIN Female |
| Connector Location | Bottom |
| Connector Quantity | 6 |
| Lightning Protection | dc Ground |
| Radiator Material | Aluminum \| Low loss circuit board |
| Radome Material | Fiberglass, UV resistant |
| Wind Loading, maximum | 617.7 N @ 150 km/h<br>138.9 lbf @ 150 km/h |
| Wind Speed, maximum | 241.4 km/h \| 150.0 mph |

### Dimensions

| | |
|---|---|
| Depth | 181.0 mm \| 7.1 in |
| Length | 1844.0 mm \| 72.6 in |
| Width | 301.0 mm \| 11.9 in |
| Net Weight | 18.4 kg \| 40.6 lb |

Web2PDF
converted by Web2PDFConvert.com

### Remote Electrical Tilt (RET) Information

| | |
|---|---|
| Annual Failure Rate, maximum | 0.01% |
| Power Consumption, during motor movements, maximum | 11.0 W |
| Power Consumption, idle state, maximum | 2.0 W |
| Power Input | 10–30 V |
| Protocol | 3GPP/AISG 2.0 Multi-RET |
| RET Interface | RS-485 Female (daisy chain port ,1) \| RS-485 Male (input port, 1) |
| RET Interface, quantity | 1 female \| 1 male |
| RET System | Teletilt® |

### Packed Dimensions

| | |
|---|---|
| Depth | 299.0 mm \| 11.8 in |
| Length | 1970.0 mm \| 77.6 in |
| Shipping Weight | 31.0 kg \| 68.3 lb |
| Width | 409.0 mm \| 16.1 in |

### Regulatory Compliance/Certifications

| Agency | Classification |
|---|---|
| RoHS 2011/65/EU | Compliant by Exemption |
| China RoHS SJ/T 11364-2006 | Above Maximum Concentration Value (MCV) |
| ISO 9001:2008 | Designed, manufactured and/or distributed under this quality management system |

### INCLUDED PRODUCTS

**BSAMNT-1**
Wide Profile Antenna Downtilt Mounting Kit for 2.5 - 4.5 in (64 115 mm) OD round members. Kit contains one scissor top bracket set and one bottom bracket set.

©2013 CommScope, Inc. All rights reserved. All trademarks identified by ® or ™ are registered trademarks, respectively, of CommScope.
All specifications are subject to change without notice. See www.commscope.com for the most current information. Revised: August 28, 2013



## Product Specifications

COMMSCOPE®

POWERED BY ANDREW.

SBNHH-1D45B
**Andrew® Tri-band Antenna, 698–896 and 2x 1695–2360 MHz, 45° horizontal beamwidth, internal RETs.**

- Interleaved dipole technology providing for attractive, low wind load mechanical package
- Three internal RETs for independent tilt on all three bands

### Electrical Specifications

| Frequency Band, MHz | 698–806 | 806–896 | 1695–1880 | 1850–1990 | 1920–2200 | 2300–2360 |
|---|---|---|---|---|---|---|
| Gain, dBi | 16.9 | 17.6 | 19.6 | 20.1 | 20.5 | 21.0 |
| Beamwidth, Horizontal, degrees | 47 | 43 | 45 | 42 | 42 | 39 |
| Beamwidth, Vertical, degrees | 12.4 | 11.4 | 5.8 | 5.3 | 5.1 | 4.5 |
| Beam Tilt, degrees | 0–14 | 0–14 | 0–8 | 0–8 | 0–8 | 0–8 |
| USLS, dB | 16 | 16 | 18 | 17 | 17 | 16 |
| Front-to-Back Ratio at 180°, dB | 34 | 33 | 35 | 37 | 37 | 39 |
| Isolation, dB | 25 | 25 | 25 | 25 | 25 | 25 |
| Isolation, Intersystem, dB | 30 | 30 | 30 | 30 | 30 | 30 |
| VSWR \| Return Loss, dB | 1.5 \| 14.0 | 1.5 \| 14.0 | 1.5 \| 14.0 | 1.5 \| 14.0 | 1.5 \| 14.0 | 1.5 \| 14.0 |
| PIM, 3rd Order, 2 x 20 W, dBc | -153 | -153 | -153 | -153 | -153 | -153 |
| Input Power per Port, maximum, watts | 350 | 350 | 350 | 350 | 350 | 300 |
| Polarization | ±45° | ±45° | ±45° | ±45° | ±45° | ±45° |
| Impedance | 50 ohm | 50 ohm | 50 ohm | 50 ohm | 50 ohm | 50 ohm |

### Electrical Specifications, BASTA*

| Frequency Band, MHz | 698–806 | 806–896 | 1695–1880 | 1850–1990 | 1920–2200 | 2300–2360 |
|---|---|---|---|---|---|---|
| Gain by all Beam Tilts, average, dBi | 16.6 | 17.3 | 19.2 | 19.8 | 20.1 | 20.8 |
| Gain by all Beam Tilts Tolerance, dB | ±0.4 | ±0.3 | ±0.5 | ±0.4 | ±0.5 | ±0.4 |
| Gain by Beam Tilt, average, dBi | 0 ° \| 16.6<br>7 ° \| 16.7<br>14 ° \| 16.4 | 0 ° \| 17.3<br>7 ° \| 17.4<br>14 ° \| 17.1 | 0 ° \| 19.3<br>4 ° \| 19.3<br>8 ° \| 19.0 | 0 ° \| 19.9<br>4 ° \| 19.9<br>8 ° \| 19.6 | 0 ° \| 20.1<br>4 ° \| 20.2<br>8 ° \| 20.0 | 0 ° \| 20.7<br>4 ° \| 20.9<br>8 ° \| 20.4 |
| Beamwidth, Horizontal Tolerance, degrees | ±1.5 | ±2.8 | ±2.1 | ±1.7 | ±1 | ±1.7 |
| Beamwidth, Vertical Tolerance, degrees | ±0.8 | ±0.6 | ±0.3 | ±0.2 | ±0.4 | ±0.1 |
| USLS, dB | 19 | 23 | 16 | 15 | 16 | 16 |
| Front-to-Back Total Power at 180° ± 30°, dB | 24 | 24 | 28 | 30 | 31 | 30 |
| CPR at Boresight, dB | 28 | 29 | 23 | 24 | 20 | 19 |
| CPR at 10 dB Horizontal Beamwidth, dB | 13 | 17 | 13 | 13 | 13 | 13 |

* CommScope® supports NGMN recommendations on Base Station Antenna Standards (BASTA). To learn more about the benefits of BASTA, download the whitepaper Time to Raise the Bar on BSAs.

### General Specifications

| | |
|---|---|
| Antenna Brand | Andrew® |
| Antenna Type | DualPol® multiband with internal RET |
| Band | Multiband |
| Brand | DualPol® \| Teletilt® |
| Operating Frequency Band | 1695 – 2360 MHz \| 698 – 896 MHz |
| Performance Note | Outdoor usage |

### Mechanical Specifications

| | |
|---|---|
| Color | Light gray |

©2015 CommScope, Inc. All rights reserved. All trademarks identified by ® or ™ are registered trademarks, respectively, of CommScope.
All specifications are subject to change without notice. See www.commscope.com for the most current information. Revised: August 21, 2015



## Product Specifications

COMMSCOPE®

SBNHH-1D45B

POWERED BY ANDREW.

| | |
|---|---|
| Lightning Protection | dc Ground |
| Radiator Material | Aluminum \| Low loss circuit board |
| Radome Material | Fiberglass, UV resistant |
| Reflector Material | Aluminum |
| RF Connector Interface | 7-16 DIN Female |
| RF Connector Location | Bottom |
| RF Connector Quantity, total | 6 |
| Wind Loading, maximum | 1038.0 N @ 150 km/h<br>233.4 lbf @ 150 km/h |
| Wind Speed, maximum | 241 km/h \| 150 mph |

### Dimensions

| | |
|---|---|
| Depth | 178.0 mm \| 7.0 in |
| Length | 1829.0 mm \| 72.0 in |
| Width | 457.0 mm \| 18.0 in |
| Net Weight | 29.2 kg \| 64.4 lb |

### Remote Electrical Tilt (RET) Information

| | |
|---|---|
| Input Voltage | 10–30 Vdc |
| Power Consumption, idle state, maximum | 2.0 W |
| Power Consumption, normal conditions, maximum | 13.0 W |
| Protocol | 3GPP/AISG 2.0 (Multi-RET) |
| RET Interface | 8-pin DIN Female \| 8-pin DIN Male |
| RET Interface, quantity | 1 female \| 1 male |
| RET System | Teletilt® |

### Packed Dimensions

| | |
|---|---|
| Depth | 311.0 mm \| 12.2 in |
| Length | 1950.0 mm \| 76.8 in |
| Width | 567.0 mm \| 22.3 in |
| Shipping Weight | 42.5 kg \| 93.7 lb |

### Regulatory Compliance/Certifications

| Agency | Classification |
|---|---|
| RoHS 2011/65/EU | Compliant by Exemption |
| China RoHS SJ/T 11364-2006 | Above Maximum Concentration Value (MCV) |
| ISO 9001:2008 | Designed, manufactured and/or distributed under this quality management system |

### Included Products

BSAMNT-1 — Wide Profile Antenna Downtilt Mounting Kit for 2.4 - 4.5 in (60 - 115 mm) OD round members. Kit contains one

©2015 CommScope, Inc. All rights reserved. All trademarks identified by ® or ™ are registered trademarks, respectively, of CommScope.
All specifications are subject to change without notice. See www.commscope.com for the most current information. Revised: August 21, 2015



Web2PDF
converted by Web2PDFConvert.com

2 / A3.3 NEW ANTENNA SPECIFICATION SHEETS
SCALE: 1/4" = 1'-0"

ERICSSON

# RRUS 32/72

The multi standard RRUS 32/72 is designed to be located near the antenna and remotely extends the reach of the RBS main unit by up to 40 km. A fiber optic cable connects the RRUS 32/72 to the RBS main unit or an expanded macro RBS. The RRUSs can be connected in a star or cascade configuration with optical cable links.

Depending on the software application, the RRUS 32/72 supports the Antenna System Controller (ASC), the Tower Mounted Amplifier (TMA), the Frequency Shifting Tower Mounted Amplifier (TMF), or the Remote Electrical Tilt Unit (RETU). The RET interface on the RRUS is the link to the antenna communication system.

RRUS 32/72 is multi standard GSM, WCDMA and LTE FDD/TDD (depending on frequency band). It has 4 duplex RX/TX branch.The RRUS 32/72 can handle up to 6 GSM, 4 WCDMA carriers or 2 x 20 MHz LTE FDD / 3 x 20 MHz LTE (TDD).

Optional installation equipment for wall and pole mount is also available together with Power Supply Unit (PSU AC 08).

## TECHNICAL SPECIFICATIONS RRUS 32/72

| | |
|---|---|
| **FREQUENCY BANDS:** | 3GPP Bands B2 (G/W/L), B3 (G/W/L), B4 (W/L), B7 (L), B30 (L), B40 (L), B41 (L) |
| **HW CAPACITY:** | Carrier capacity GSM: 6 carriers<br>Carrier capacity WCDMA: 4 carriers<br>Carrier capacity LTE: 2 x 20 MHz (FDD), 3 x 20 Hz (TDD)<br>IBW: FDD up to 40 MHz , TDD up to 60 MHz<br>MIMO: Yes, 4RX, 4X2 and 4X4<br>Output power: Up to 4 x 40W |
| **INTERFACE SPECIFICATIONS:** | Power supply: -48 V DC (2-Wire or 3-Wire)<br>Antenna Ports: 4 DIN 7/16<br>External ALD: RET 2.0, DIN 8<br>External Alarm: DIN 8<br>CPRI: 2 x 10 Gbps CPRI (Changeable SFPs)<br>Maintenance button<br>2 x optical indicators<br>Field Ground |
| **MECHANICAL SPECIFICATIONS:** | WxDxH: 276 mm x 157 mm x 580 mm without Solar Shield<br>WxDxH: 306 mm x 178 mm x 690 mm with Solar Shield<br>Weight and volume: < 25 litres and < 23kg<br>Mounting: Wall, Pole mount, using standard RRU brackets |
| **POWER SPECIFICATIONS:** | Nominal voltage: -48 VDC<br>Voltage variation: -38.1 V to -57.6 VDC |
| **ENVIRONMENTAL SPECIFICATIONS:** | Environment: Outdoor class with IP55<br>Normal operating temp.: -40 - +55 °C (cold start at -40 °C) |

Telefonaktiebolaget LM Ericsson
SE-126 25 Stockholm, Sweden
Telephone +46 8 719 0000
Fax +46 8 18 40 85
www.ericsson.com

4/28701-FGB 101 0369 rev A
© Ericsson 2014

1 / A3.3 RRUS-32 SPECIFICATION SHEETS
SCALE: 1/4" = 1'-0"

COMPLETE Wireless Consulting, Inc.

MST ARCHITECTS
WIRELESS DIVISION
1520 River Park Drive, Sacramento, CA 95815
916-567-9630
www.MSTArchitects.com

THESE DRAWINGS AND SPECIFICATIONS, AS INSTRUMENTS OF SERVICE, ARE AND SHALL REMAIN THE PROPERTY OF MST ARCHITECTS, INC. WHEREVER THE PROJECTS FOR WHICH THEY WERE PREPARED HAVE BEEN COMPLETED. THEY ARE NOT TO BE USED BY OTHERS ON OTHER PROJECTS WITHOUT PRIOR WRITTEN CONSENT OF THE ARCHITECT. COPYRIGHT MST ARCHITECTS, INC. ALL RIGHTS RESERVED.

GOLDEN GATE FIELDS
PCS PROJECT
1100 EASTSHORE HWY
ALBANY, CA 94706

verizon WIRELESS

SHEET TITLE: EQUIPMENT SPECIFICATIONS

LICENSED ARCHITECT
MANUEL S. TSIMAS
No. C-28021
Exp. 08-17
STATE OF CALIFORNIA
Not valid unless signed in ink by licensee.

| Revisions: |
|---|
| 1 02/15/16 |
| 2 -- |
| 3 -- |
| 4 -- |
| 5 -- |

File: 162.1610_A33.dwg
Drawn By: ALB
Checked By: ALB
Scale: AS NOTED
Date: 02/15/16

Job No. 162.1610

A3.3