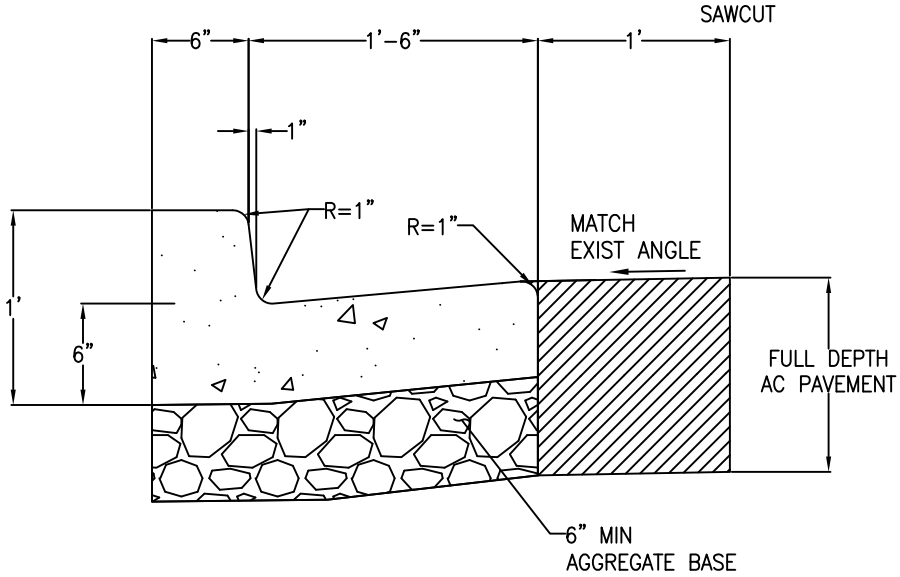

TYPE "A" CURB AND GUTTER

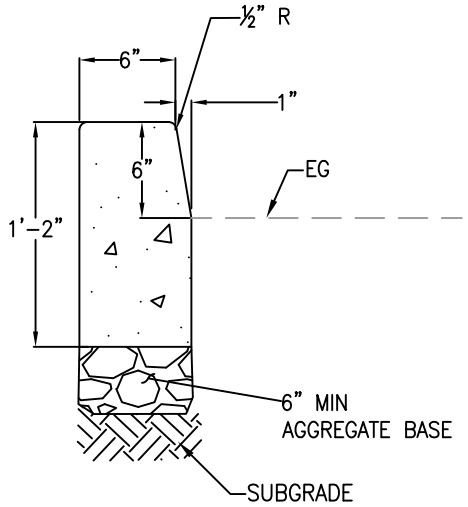

TYPE "B" CURB

CURBS

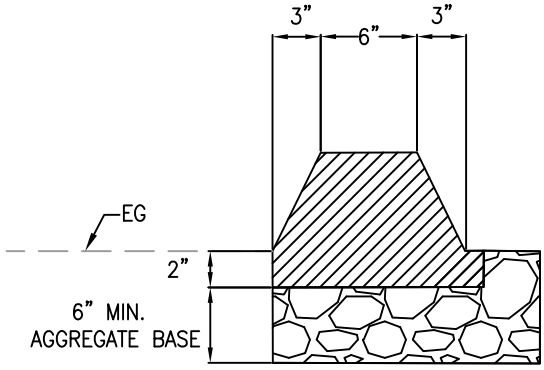

AC BERM

NOTE:

1. CONSTRUCT TYPE "A" CURB AND GUTTER WITH 10' BUFFER TO CONFORM GUTTER TO EXISTING CONDITIONS.
2. SAWCUT APPROXIMATELY 1' FROM THE EDGE OF CURB ON THE ROADWAY SIDE TO ALLOW SPACE FOR CONSTRUCTION. PLUG GAP WITH NEW ASPHALT CONCRETE.
3. WHEN POSSIBLE USE TYPE "A" CURB AND GUTTER WITH SIDEWALK AND TYPE "B" CURB WHEN CONSTRUCTING MEDIANS AT CENTER OF ROADWAY. AC BERM USED AT THE APPROVAL OF THE CITY ENGINEER.

SCALE: NTS

CITY OF ALBANY, CALIFORNIA	STANDARD DETAIL	
APPROVED BY: Ray Chan DATE: DECEMBER 2015	AC DIKE, CURB AND GUTTER DETAIL	STD DETAIL No. ST 1

K:\Standard Specifications and details\Details\CAD Drawings\ST 1 AC Dike Curb and Gutter.dwg

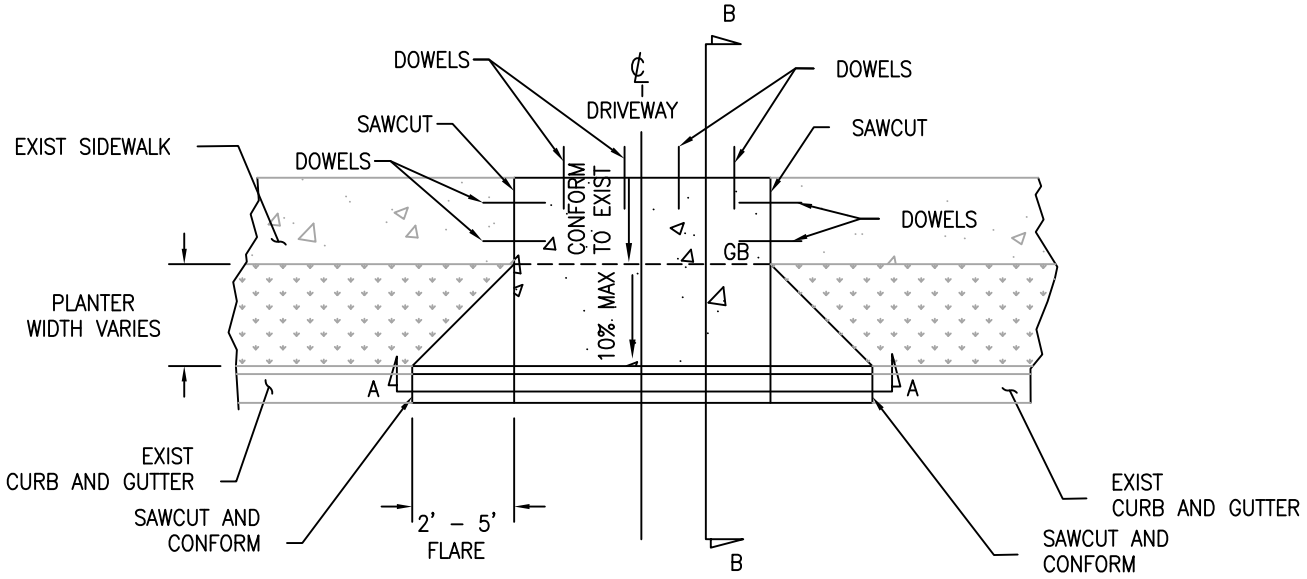

PLAN

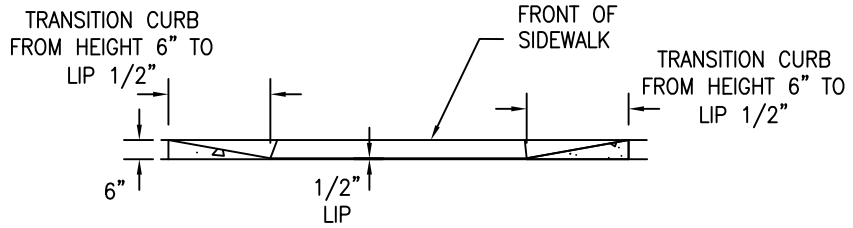

SECTION A–A

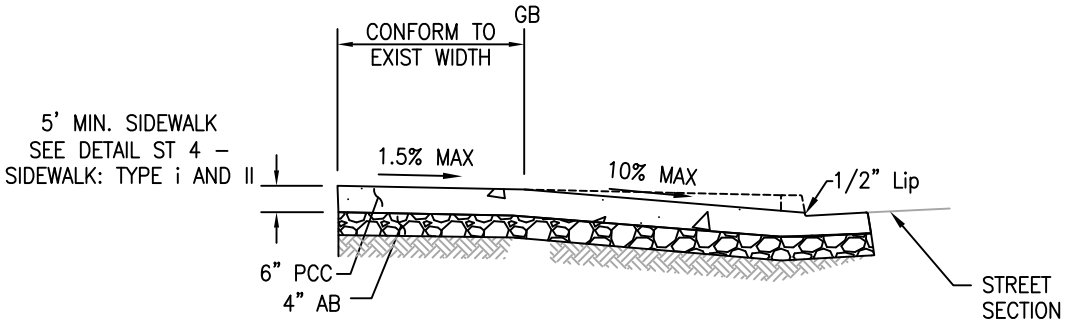

SECTION B–B

NOTES:

1. CONSTRUCT DRIVEWAY TYPE 2 TO CONFORM TO EXISTING DRIVEWAY, SIDEWALK AND CURB AND GUTTER
2. CONFORM TO WIDTHS OF SIDEWALKS AND CURB AND GUTTER WIDTHS AND HEIGHTS. WHENEVER POSSIBLE MAINTAIN MINIMUM WIDTH OF 5' FOR SIDEWALKS, 1'–6" FOR GUTTERS AND 6" FOR CURB HEIGHTS.

SCALE: NTS

CITY OF ALBANY, CALIFORNIA	STANDARD DETAIL	
APPROVED BY: Ray Chan DATE: DECEMBER 2015	DRIVEWAY TYPE 1	STD DETAIL No. ST 2

K:\Standard Specifications and details\Details\CAD Drawings\ST 2 Driveway Type 1.dwg

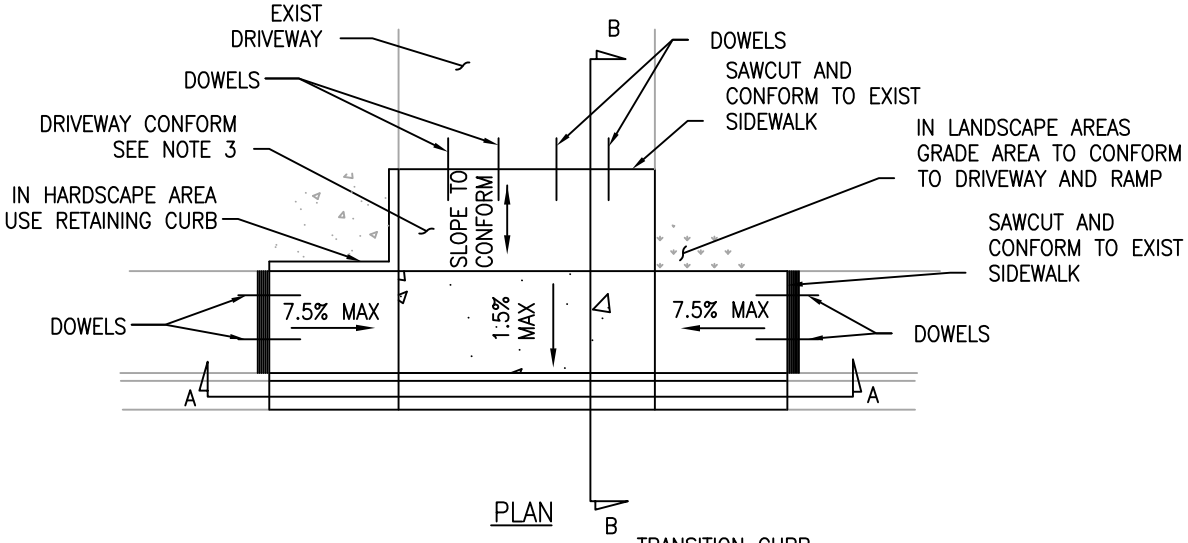

PLAN

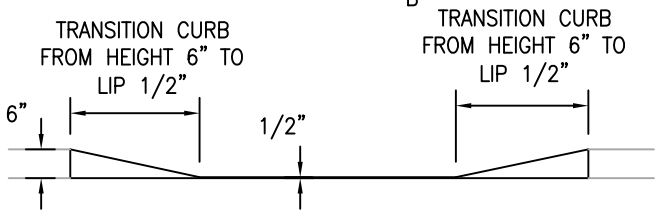

SECTION A–A

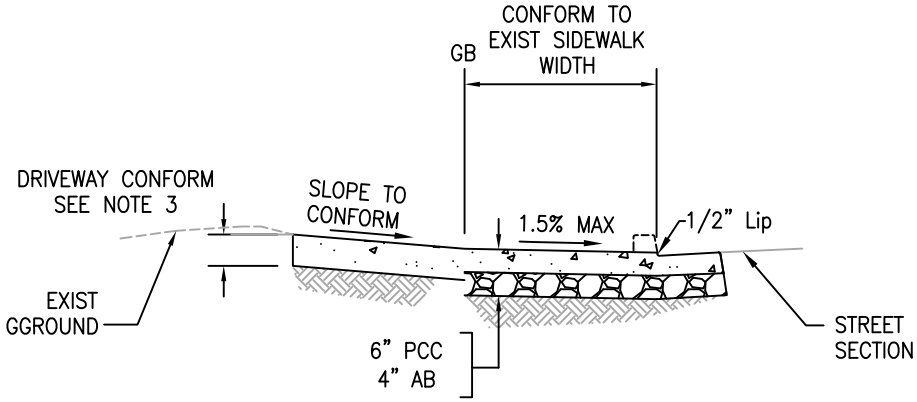

SECTION B–B

NOTES:

1. CONSTRUCT DRIVEWAY TYPE 2 TO CONFORM TO EXISTING DRIVEWAY, SIDEWALK AND CURB AND GUTTER
2. CONFORM TO WIDTHS OF SIDEWALKS AND CURB AND GUTTER WIDTHS AND HEIGHTS. WHENEVER POSSIBLE MAINTAIN MINIMUM WIDTH OF 5' FOR SIDEWALKS, 1'–6" FOR GUTTERS AND 6" FOR CURB HEIGHTS.
3. FOR DRIVEWAY CONFORM MATCH THE SAME MATERIAL AS THE EXISTING DRIVEWAY.

SCALE: NTS

CITY OF ALBANY, CALIFORNIA	STANDARD DETAIL	
APPROVED BY: Ray Chan DATE: DECEMBER 2015	DRIVEWAY TYPE 2	STD DETAIL No. ST 3

K:\Standard Specifications and details\Details\CAD Drawings\ST 3 Driveway Type 2.dwg

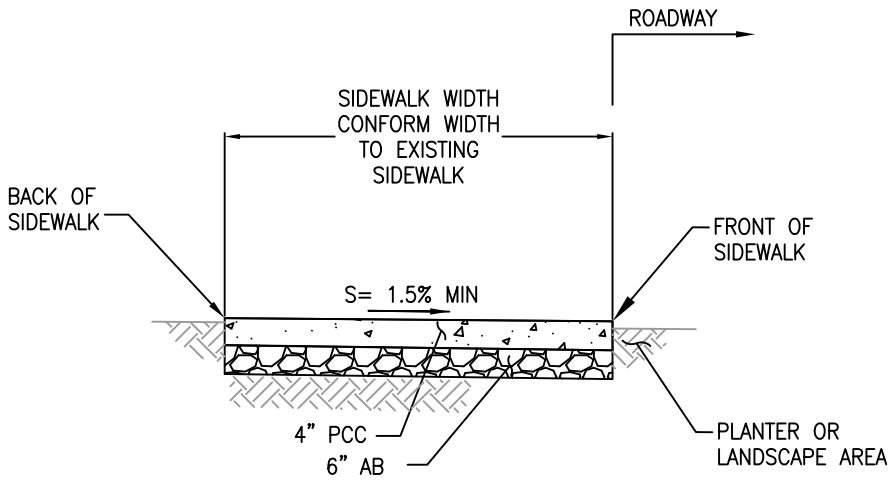

SIDEWALK – TYPE I

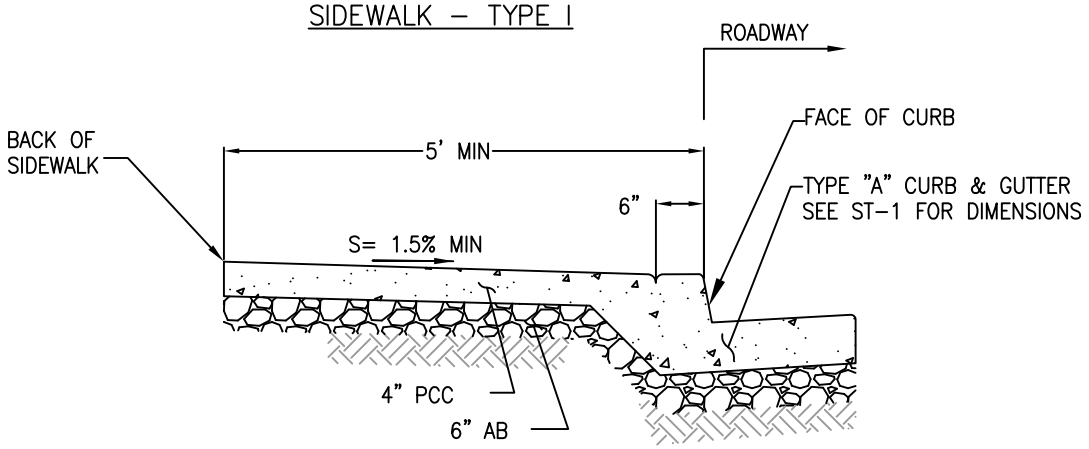

SIDEWALK – TYPE II (MONOLITHIC SIDEWALK AND CURB & GUTTER)

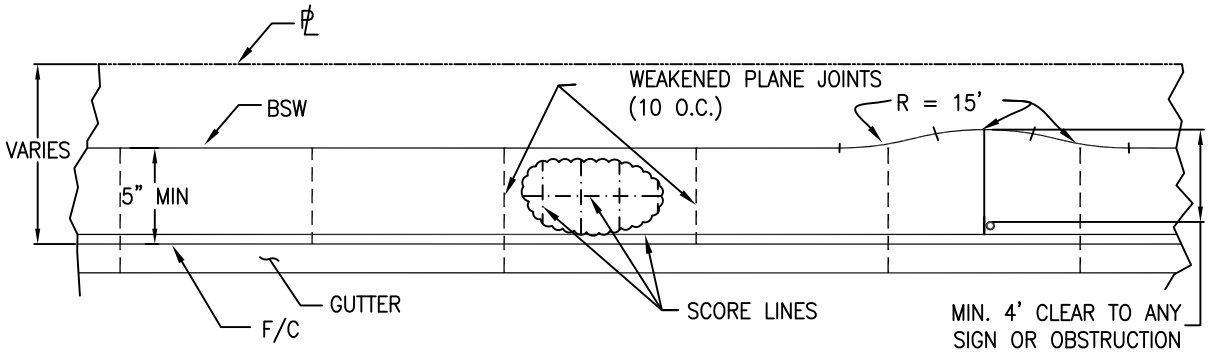

NOTES

1. FOR NEW SIDEWALK MINIMUM WIDTH IS 5' UNLESS APPROVED BY CITY ENGINEER. WHEN PLACING SIDEWALK CONFORM TO EXISTING WIDTH OF SIDEWALK. TYPE 1 WIDTH MEASURED FROM FRONT OF SIDEWALK TO BACK OF SIDEWALK. TYPE 2 WIDTH MEASURED FROM FACE OF CURB TO BACK OF SIDEWALK.

SCALE: NTS

CITY OF ALBANY, CALIFORNIA	STANDARD DETAIL	
APPROVED BY: Ray Chan DATE: DECEMBER 2015	SIDEWALK: TYPE I AND II	STD DETAIL No. ST 4

K:\Standard Specifications and details\Details\CAD Drawings\ST 4 Sidewalk.dwg

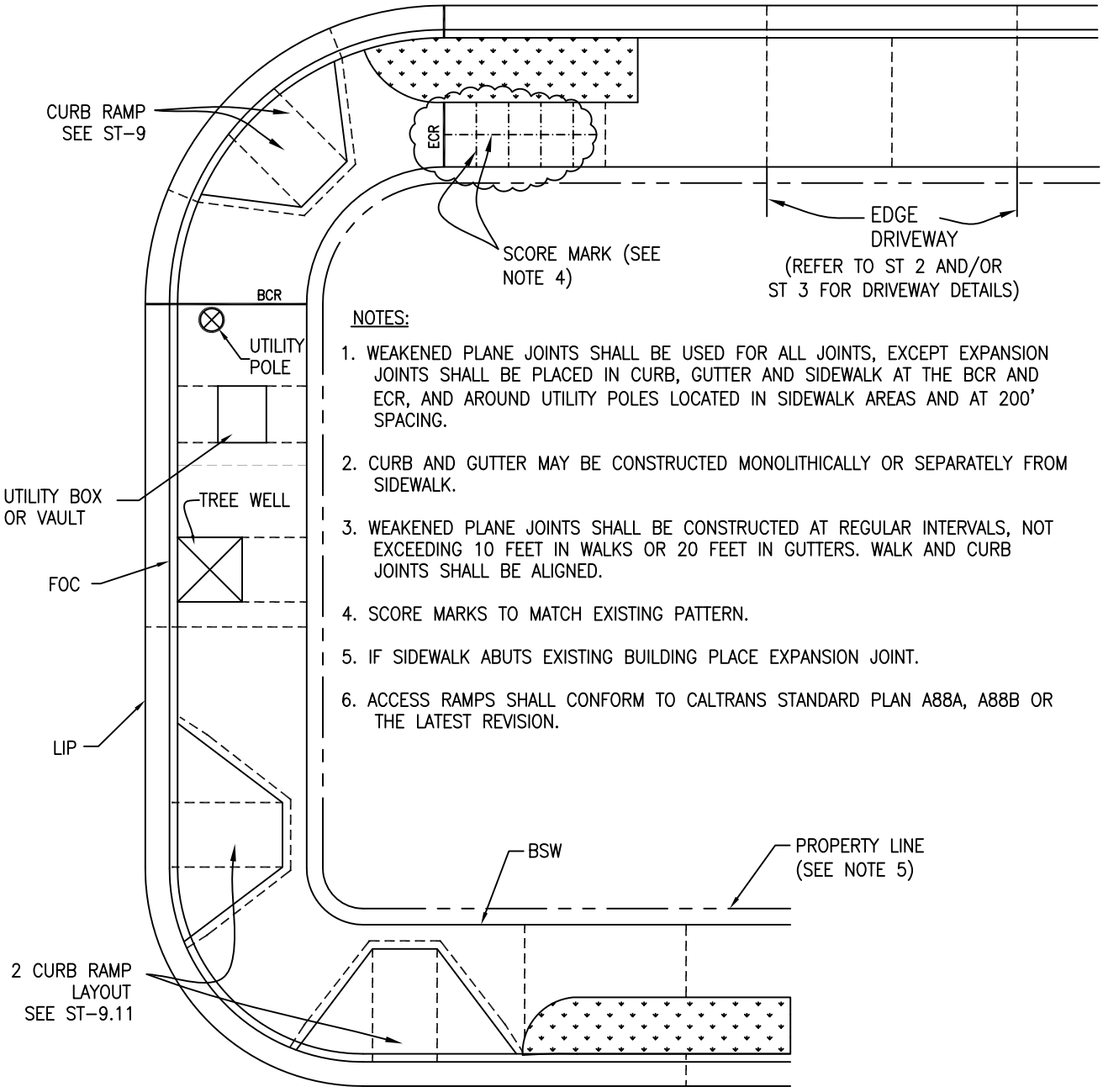

NOTES:

1. WEAKENED PLANE JOINTS SHALL BE USED FOR ALL JOINTS, EXCEPT EXPANSION JOINTS SHALL BE PLACED IN CURB, GUTTER AND SIDEWALK AT THE BCR AND ECR, AND AROUND UTILITY POLES LOCATED IN SIDEWALK AREAS AND AT 200' SPACING.
2. CURB AND GUTTER MAY BE CONSTRUCTED MONOLITHICALLY OR SEPARATELY FROM SIDEWALK.
3. WEAKENED PLANE JOINTS SHALL BE CONSTRUCTED AT REGULAR INTERVALS, NOT EXCEEDING 10 FEET IN WALKS OR 20 FEET IN GUTTERS. WALK AND CURB JOINTS SHALL BE ALIGNED.
4. SCORE MARKS TO MATCH EXISTING PATTERN.
5. IF SIDEWALK ABUTS EXISTING BUILDING PLACE EXPANSION JOINT.
6. ACCESS RAMPS SHALL CONFORM TO CALTRANS STANDARD PLAN A88A, A88B OR THE LATEST REVISION.

LEGEND:

- - - - WEAKENED PLANE JOINT
—— EXPANSION JOINT
-·-·- SCORE MARK
BCR = BEGINING OF CURB RETURN
ECR = END OF CURB RETURN

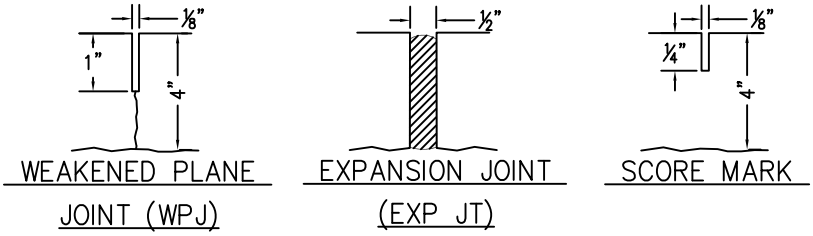

SCALE: NTS

CITY OF ALBANY, CALIFORNIA	STANDARD DETAIL	
APPROVED BY: Ray Chan DATE: DECEMBER 2015	CURB AND SIDEWALK JOINTS	STD DETAIL No. ST 5

K:\Standard Specifications and details\Details\CAD Drawings\ST 5 Curb and Sidewalk Joints.dwg

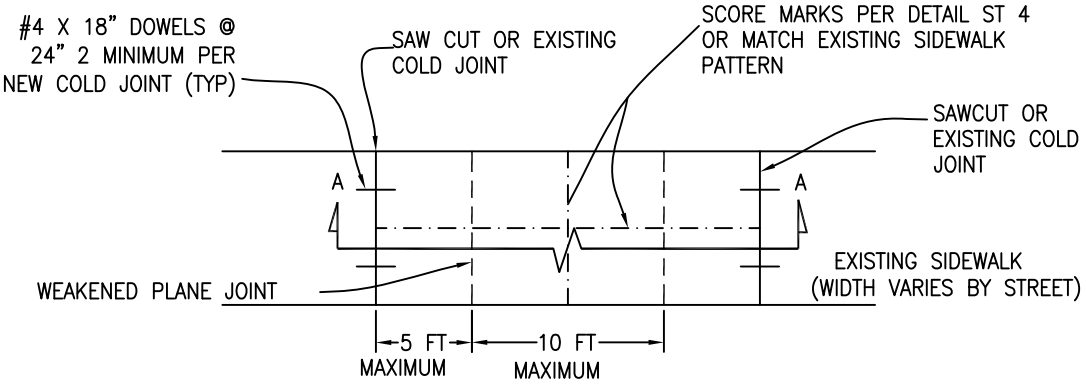

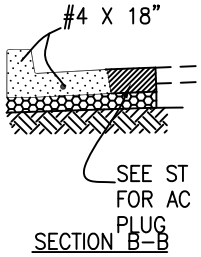

SECTION B–B

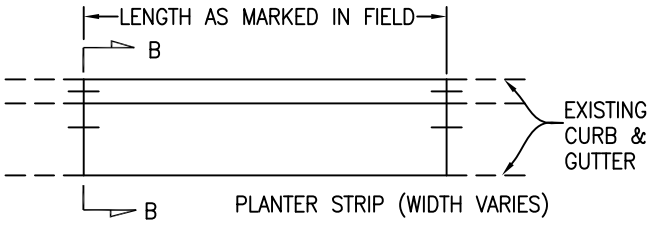

PLAN

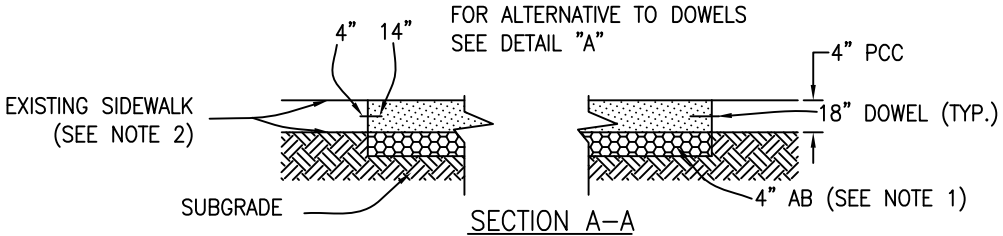

SECTION A–A

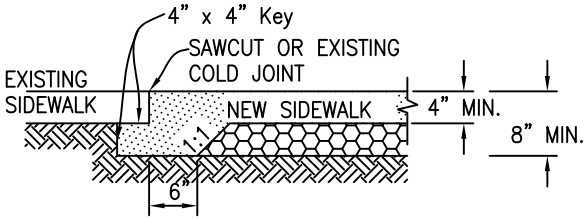

DETAIL "A"
ALTERNATIVE KEY DETAIL

NOTES:

1. IN LOCATIONS WHERE TREE ROOTS ARE WITHIN 8" OF FINISHED GRADE, DELETE 4" AB AND PLACE 6" X 6" X 10 GA WIRE MESH IN CONCRETE.
2. WHEN EXISTING SIDEWALK IS LESS THAN 4" THICK, DETAIL A MAY BE SUBSTITUTED FOR DOWELS.

SCALE: NTS

CITY OF ALBANY, CALIFORNIA	STANDARD DETAIL	
APPROVED BY: Ray Chan DATE: DECEMBER 2015	CURB, GUTTER & SIDEWALK REPAIRS	STD DETAIL No. ST 6

K:\Standard Specifications and details\Details\CAD Drawings\ST 6 Curb Gutter and Sidewalk Repairs.dwg

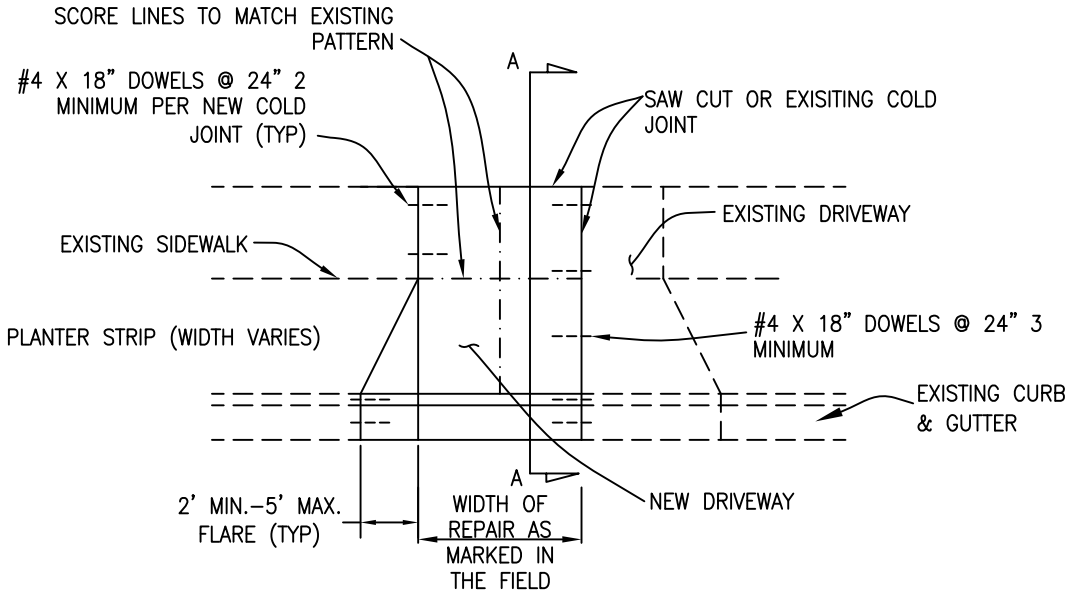

PLAN

SEE DETAIL A, ST 5
FOR ALTERNATIVE TO DOWELS

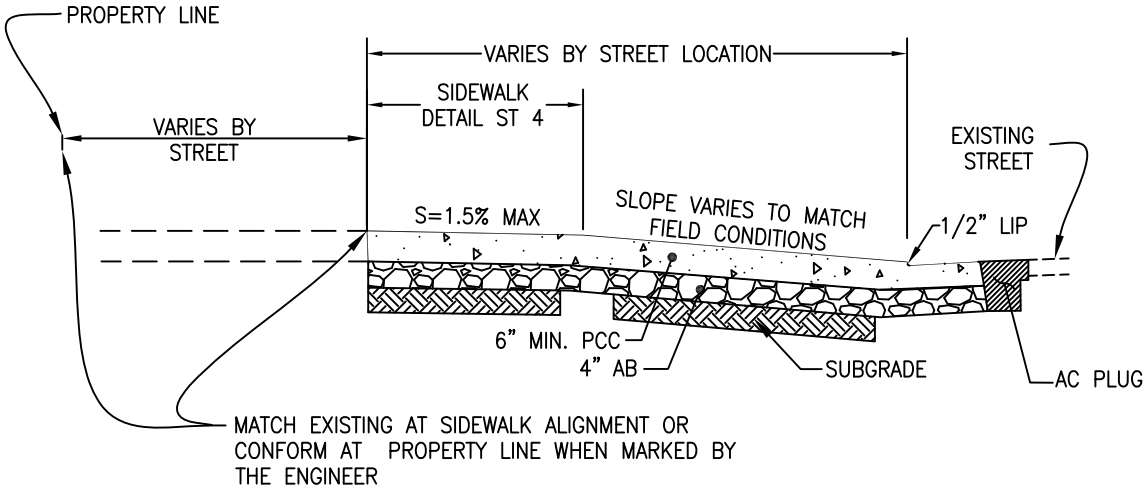

SECTION A–A

SCALE: NTS

CITY OF ALBANY, CALIFORNIA	STANDARD DETAIL	
APPROVED BY: Ray Chan DATE: DECEMBER 2015	RESIDENTIAL DRIVEWAY REPAIRS	STD DETAIL No. ST 7

K:\Standard Specifications and details\Details\CAD Drawings\ST 7 Residential Driveway Repairs.dwg

LEGEND AND ABBREVIATION

(PCC)=CONCRETE

(AB)=AGGREGATE BASE

=SUBGRADE/EXIST. GRADE

(BSW)=BACK OF SIDEWALK

PL =PROPERTY LINE

FC=FACE OF CURB

NOTES

1. SUBGRADE SHALL BE NATIVE MATERIAL, 6" DEEP, 90% RELATIVE COMPACTION.
2. CUSHION MATERIAL SHALL BE CLASS 2 AGGREGATE BASE, PER CALTRANS STANDARD SPECIFICATIONS, SECTION 26; COMPACTED TO 95% R.C.
3. CONCRETE SHALL BE 520-C-2500, 4" MAXIMUM SLUMP.
4. CURB, GUTTER AND SIDEWALK TO BE PLACED MONOLITHICALLY WHERE POSSIBLE. WHERE NON-MONOLITHIC, PLACE DOWELS AND/OR KEYWAY PER ST 1.
5. PLACE 1/2" EXPANSION JOINT AT 200' SPACINGS AND AT RETURNS.
6. PLACE 3/4" DEEP WEAKENED PLANE JOINT AT 20' MAXIMUM SPACINGS THROUGH CURB AND GUTTER, AND 10' MAXIMUM SPACINGS THROUGH SIDEWALK, DRIVEWAY AND AT EDGES OF DRIVEWAYS AND AT 1/2 WIDTH FOR SIDEWALKS AND DRIVEWAYS OVER 10 FEET IN WIDTH.
7. PLACE SCORE LINES AT 5' MINIMUM SPACING BETWEEN WEAKENED PLANE JOINTS AND ALONG BACK OF CURB. MATCH EXISTING PATTERN IN RESIDENTIAL NEIGHBORHOODS.
8. PLACE NO. 4 REINFORCING STEEL BARS AT 18 INCHES EACH WAY IN INDUSTRIAL, COMMERCIAL AND STREET LEVEL DRIVEWAYS.
9. CONCRETE TO HAVE A SOFT BROOM FINISH. CLEAR CURING COMPOUND TO BE APPLIED PER MANUFACTURER'S SPECIFICATIONS.
10. WHEN REPLACING CURB, GUTTER, SIDEWALK, AND DRIVEWAY, MATCH EXISTING WIDTH AND SCORING. SAWCUTS SHALL BE AT JOINTS OR SCORE LINES. INSERT NO. 4 BY 18" LONG STEEL DOWELS AT 24" ON CENTER (2 MINIMUM FOR CURB AND GUTTER). ADD 1.5 LB. LAMPBLACK PER CUBIC YARD.
11. STAMP 3" HIGH LETTERS – "W"(WATER) AND "S"(SEWER) IN FACE OF CURB TO LOCATE LATERALS.
12. SAWCUT EXISTING A.C. PAVEMENT WITH POWER SAW.
13. ASPHALT CONCRETE SHALL BE 1/2" MAX AGGREGATE TYPE A PER CALTRANS SEC. 39, 3" MAXIMUM LIFTS.

CITY OF ALBANY, CALIFORNIA		STANDARD DETAIL
APPROVED BY: Ray Chan DATE: DECEMBER 2015	LEGEND & NOTES- SIDEWALKS, DRIVEWAYS AND CURB & GUTTER	STD DETAIL No. ST 8

K:\Standard Specifications and details\Details\CAD Drawings\ST 8 Notes-Sidewalks Driveways Curb and Gutter.dwg

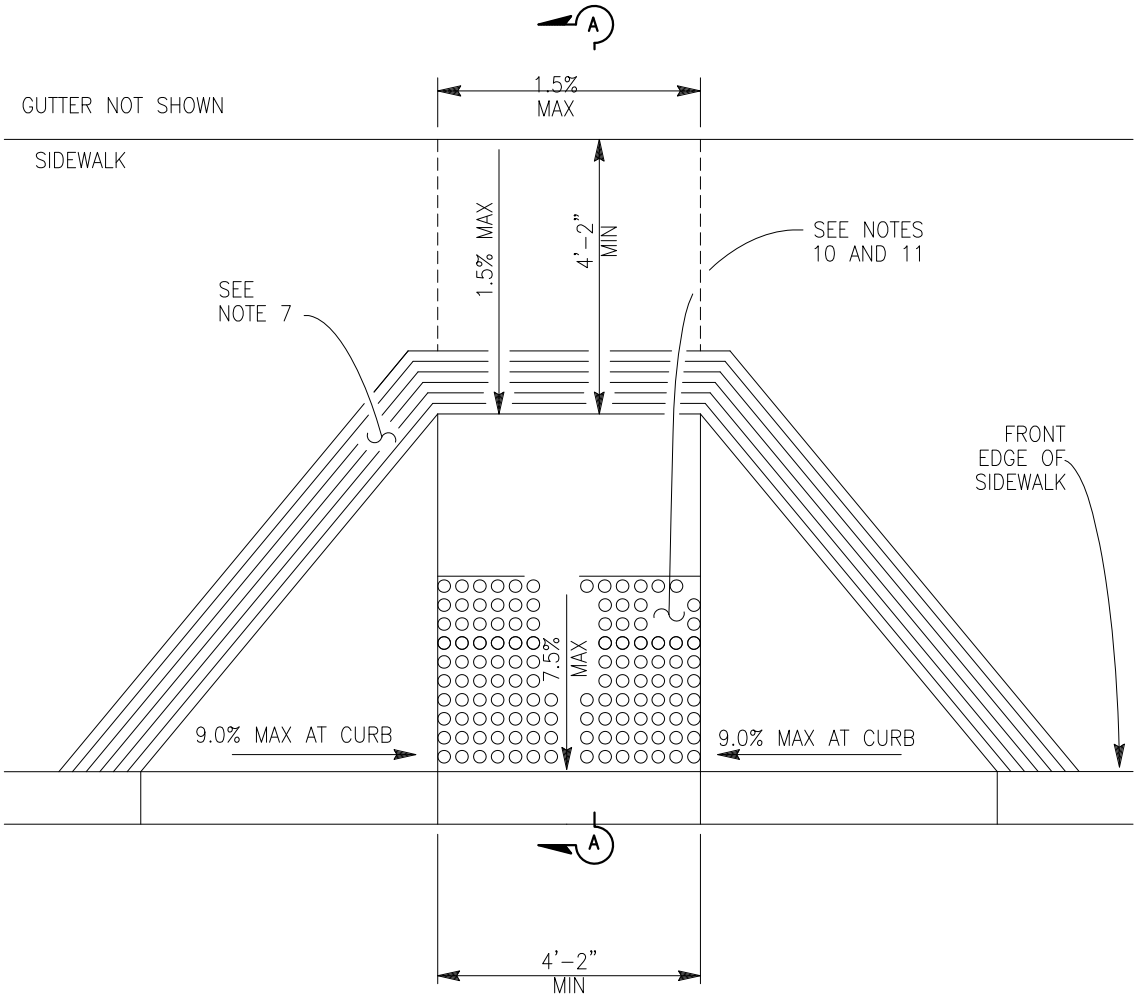

CASE A

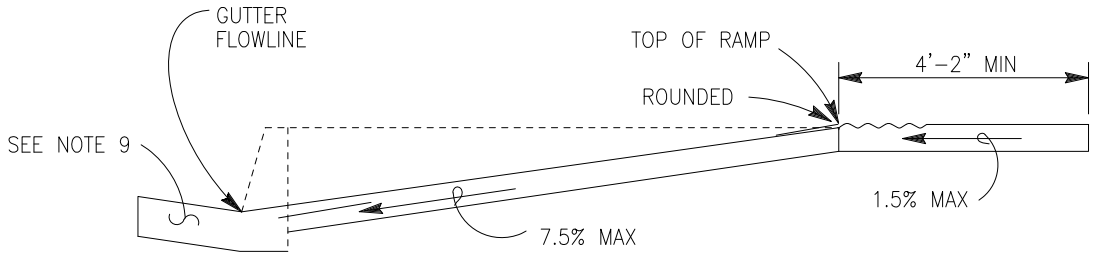

SECTION A–A

FOR NOTES SEE SHEET ST 9.11

SCALE: NTS

CITY OF ALBANY, CALIFORNIA	STANDARD DETAIL	
APPROVED BY: Ray Chan DATE: DECEMBER 2015	CURB RAMP DETAILS (CASE A)	STD DETAIL No. ST 9.1

K:\Standard Specifications and details\Details\CAD Drawings\ST 9 Curb Ramp Details.dwg

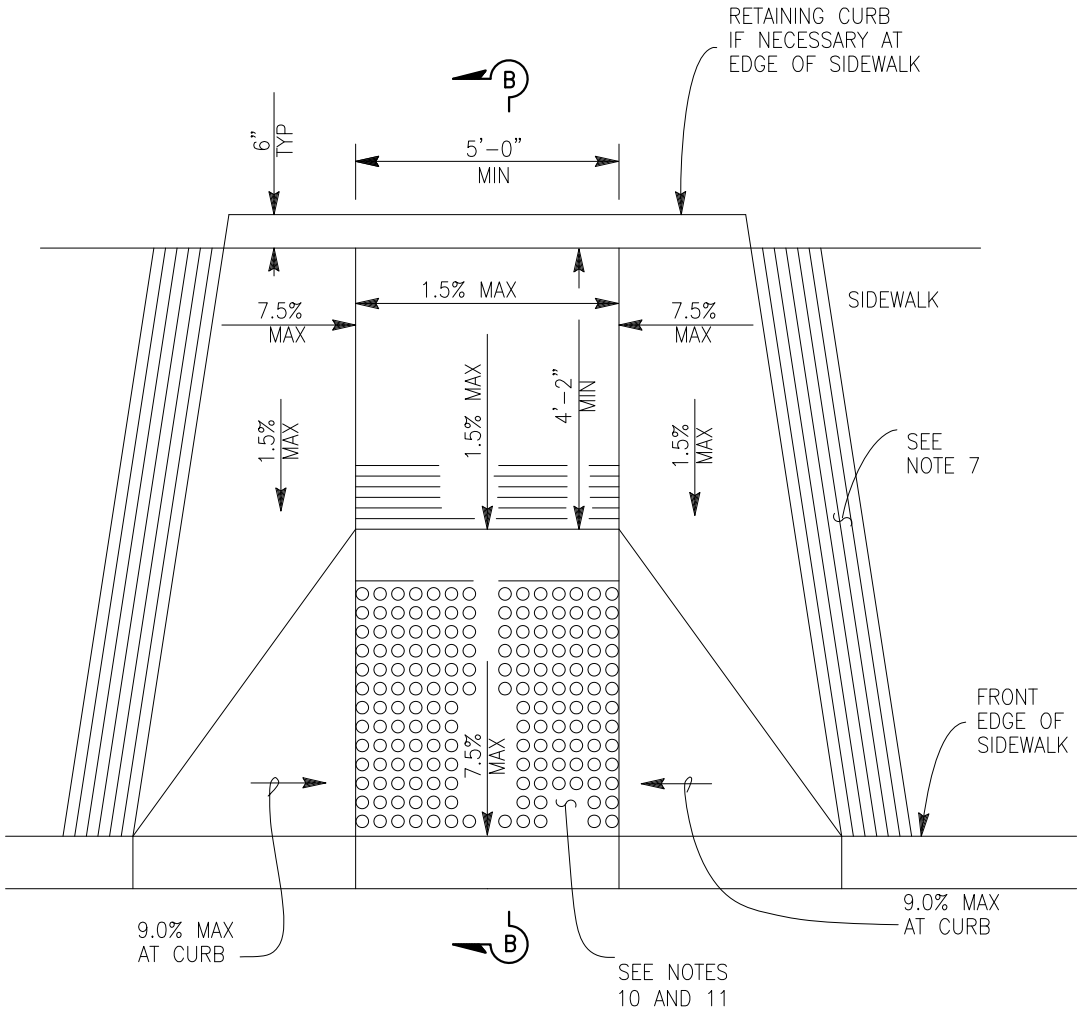

CASE B

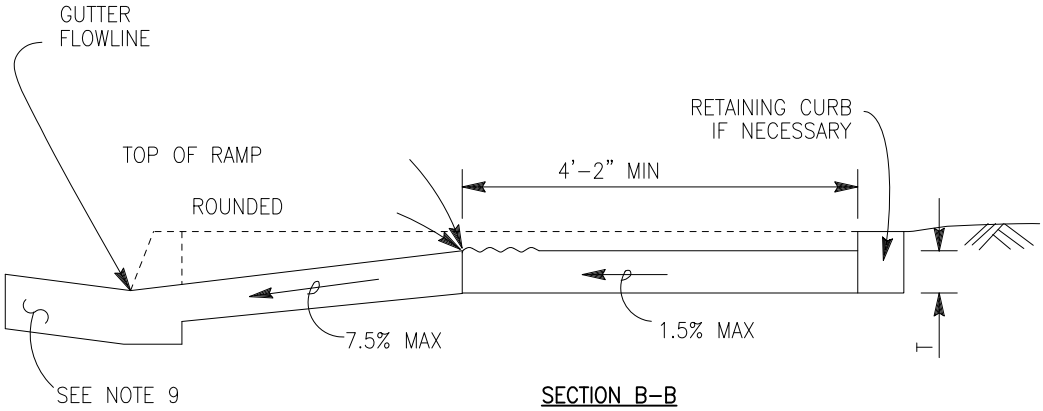

SECTION B–B

DEPRESS ENTIRE SIDEWALK AS REQUIRED

FOR NOTES SEE SHEET ST 9.11

SCALE: NTS

CITY OF ALBANY, CALIFORNIA	STANDARD DETAIL	
APPROVED BY: Ray Chan DATE: DECEMBER 2015	CURB RAMP DETAILS (CASE B)	STD DETAIL No. ST 9.2

K:\Standard Specifications and details\Details\CAD Drawings\ST 9 Curb Ramp Details.dwg

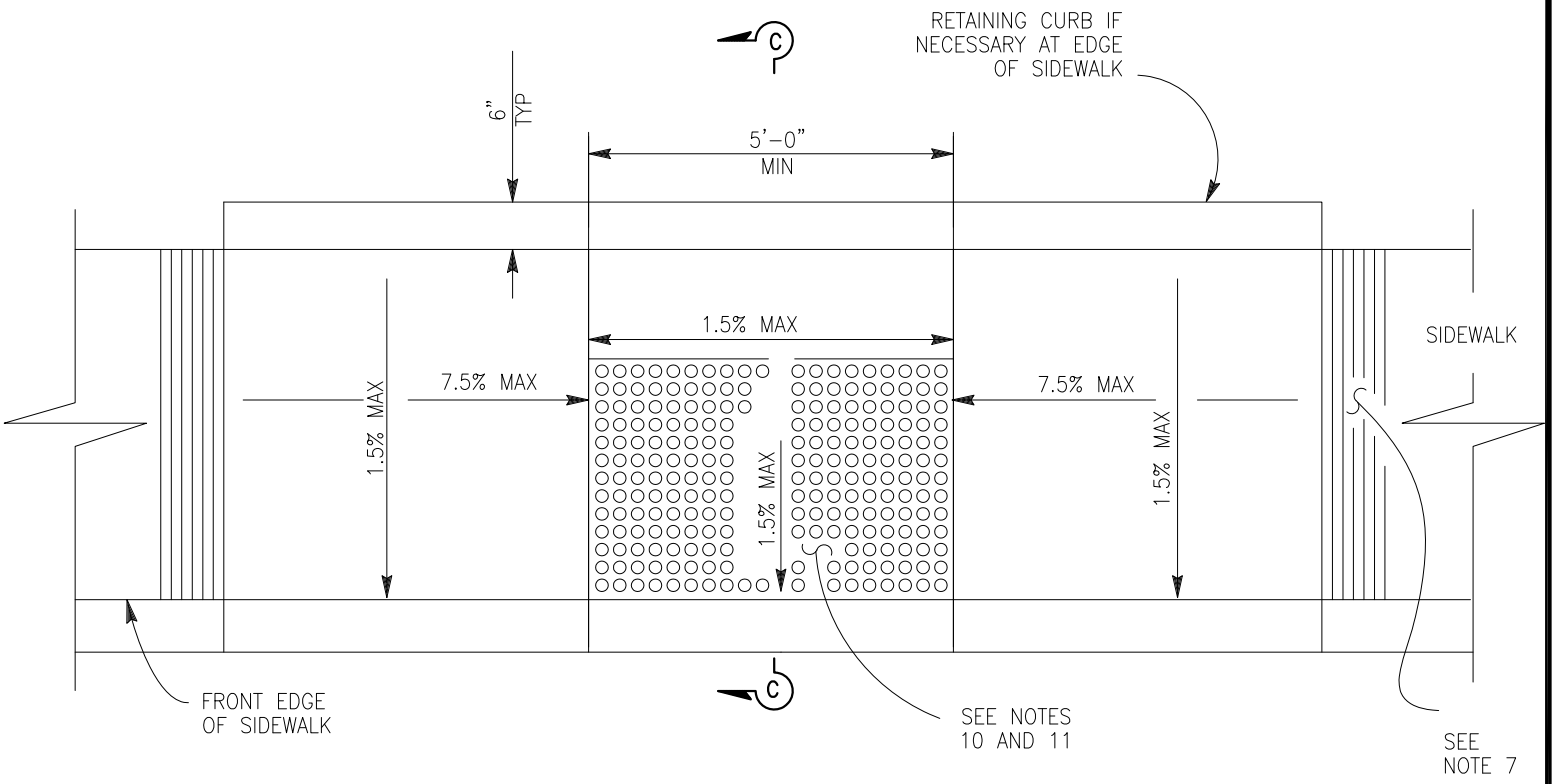

CASE C

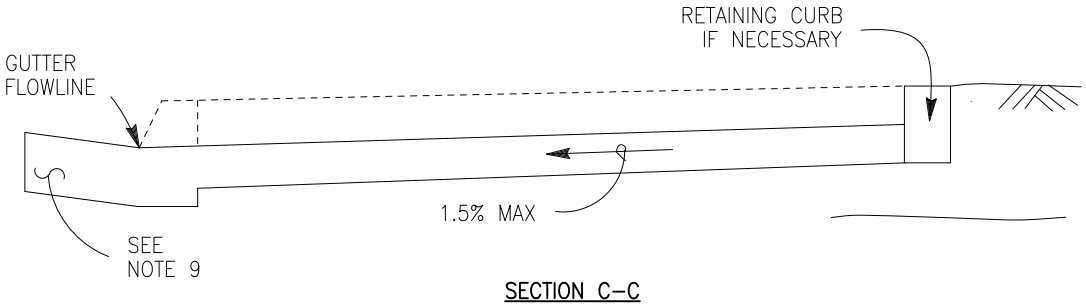

SECTION C–C

FOR NOTES SEE SHEET ST 9.11

SCALE: NTS

CITY OF ALBANY, CALIFORNIA	STANDARD DETAIL	
APPROVED BY: Ray Chan DATE: DECEMBER 2015	CURB RAMP DETAILS (CASE C)	STD DETAIL No. ST 9.3

K:\Standard Specifications and details\Details\CAD Drawings\ST 9 Curb Ramp Details.dwg

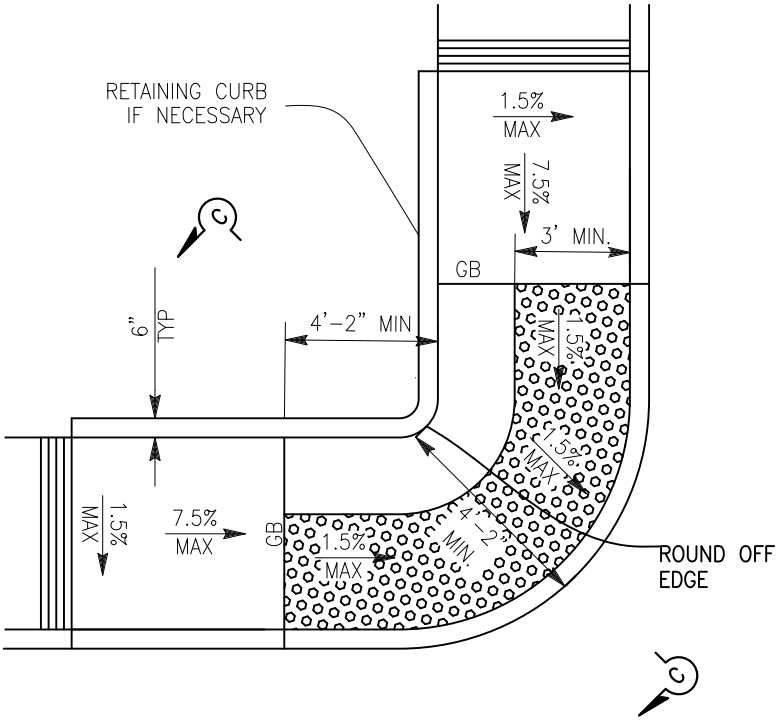

MODIFIED CASE C

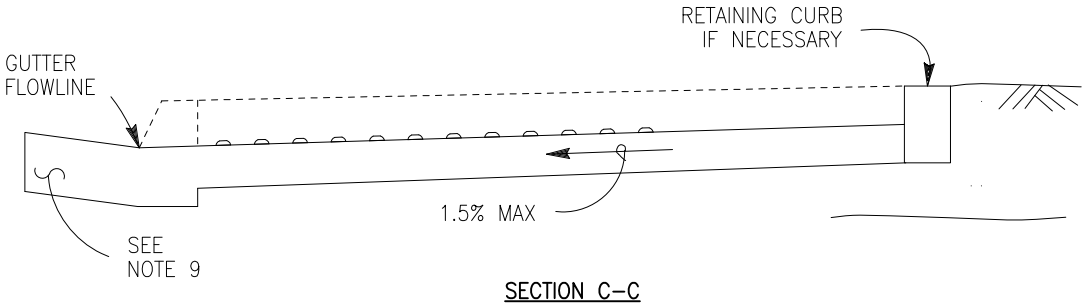

SECTION C-C

1. WHEN CONFORMING TO SIDEWALK MAINTAIN MAXIMUM SLOPE OF 7.5% FOR 10 FEET THEN USE NECESSARY SLOPE ON PROPOSED SIDEWALK FOR 10 FEET TO CONFORM TO EXISTING SIDEWALK.
2. ENGINEERING DESIGN OF THE MODIFIED CASE C TO BE APPROVED BY THE CITY ENGINEER.

FOR NOTES SEE SHEET ST 9.11

SCALE: NTS

CITY OF ALBANY, CALIFORNIA	STANDARD DETAIL	
APPROVED BY: Ray Chan DATE: DECEMBER 2015	CURB RAMP DETAILS (MODIFIED CASE C)	STD DETAIL No. ST 9.4

K:\Standard Specifications and details\Details\CAD Drawings\ST 9 Curb Ramp Details.dwg

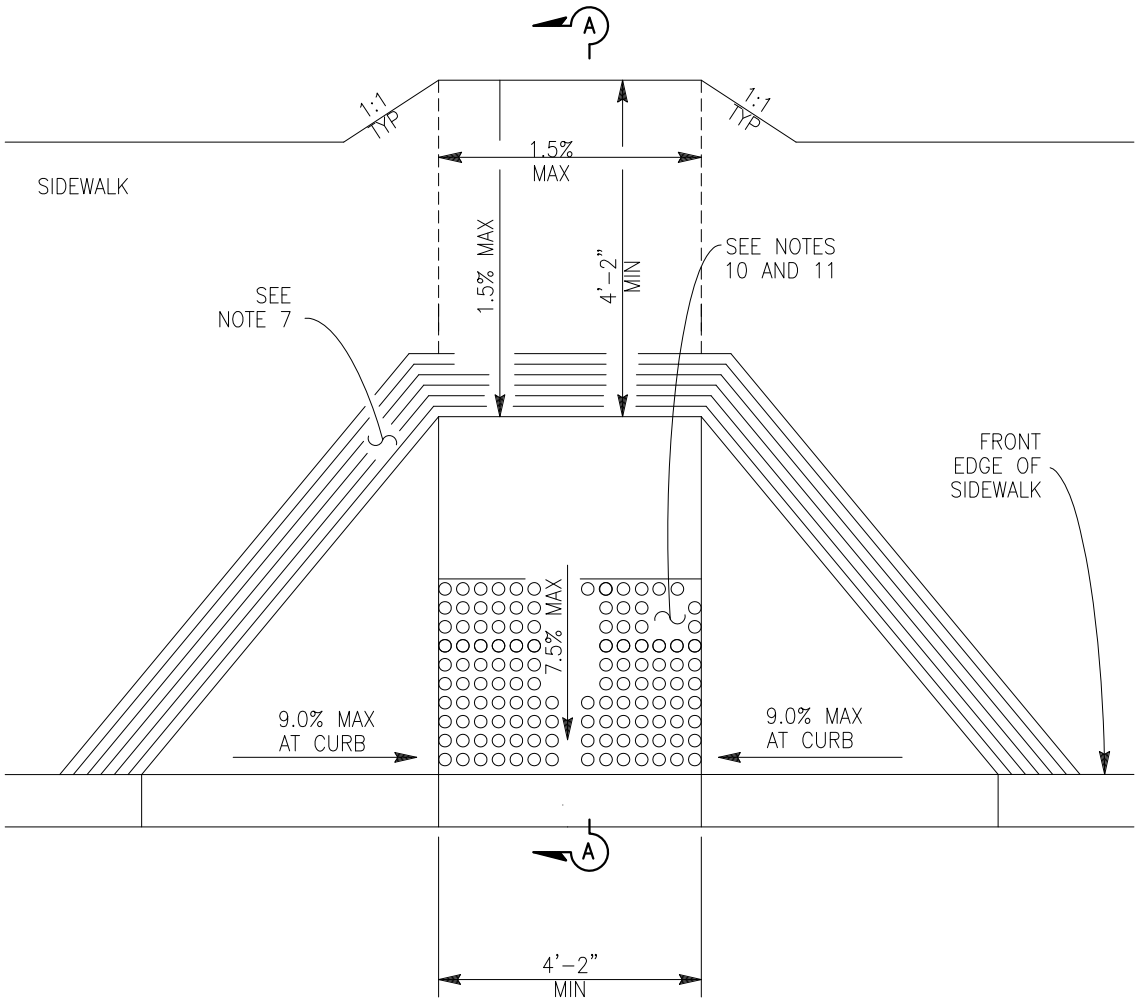

CASE D

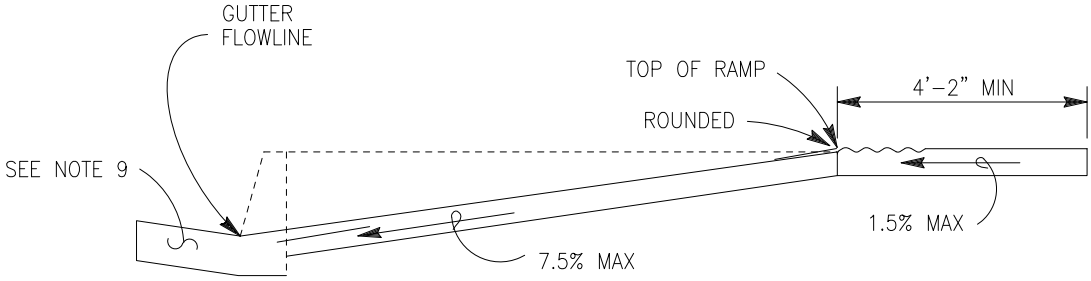

SECTION A-A

FOR NOTES SEE SHEET ST 9.11

SCALE: NTS

CITY OF ALBANY, CALIFORNIA		STANDARD DETAIL
APPROVED BY: Ray Chan DATE: DECEMBER 2015	CURB RAMP DETAILS (CASE D)	STD DETAIL No. ST 9.5

K:\Standard Specifications and details\Details\CAD Drawings\ST 9 Curb Ramp Details.dwg

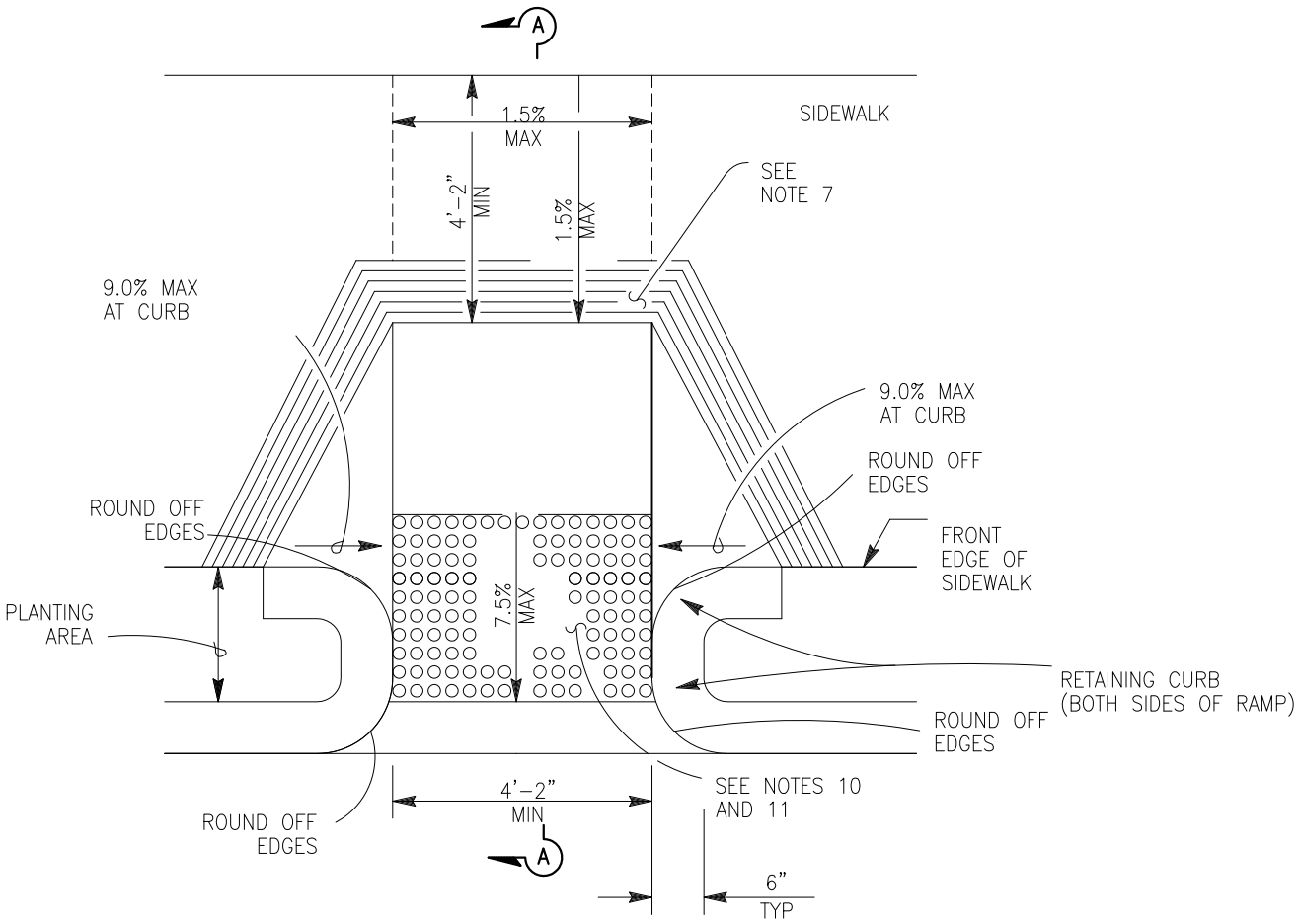

CASE E

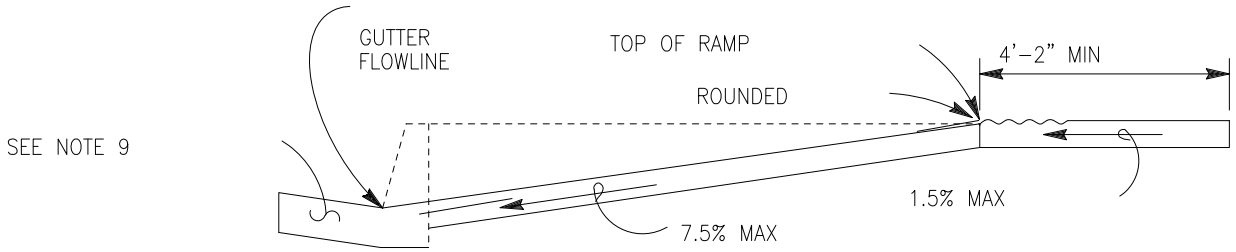

SECTION A-A

FOR NOTES SEE SHEET ST 9.11

SCALE: NTS

CITY OF ALBANY, CALIFORNIA	STANDARD DETAIL	
APPROVED BY: Ray Chan DATE: DECEMBER 2015	CURB RAMP DETAILS (CASE E)	STD DETAIL No. ST 9.6

K:\Standard Specifications and details\Details\CAD Drawings\ST 9 Curb Ramp Details.dwg

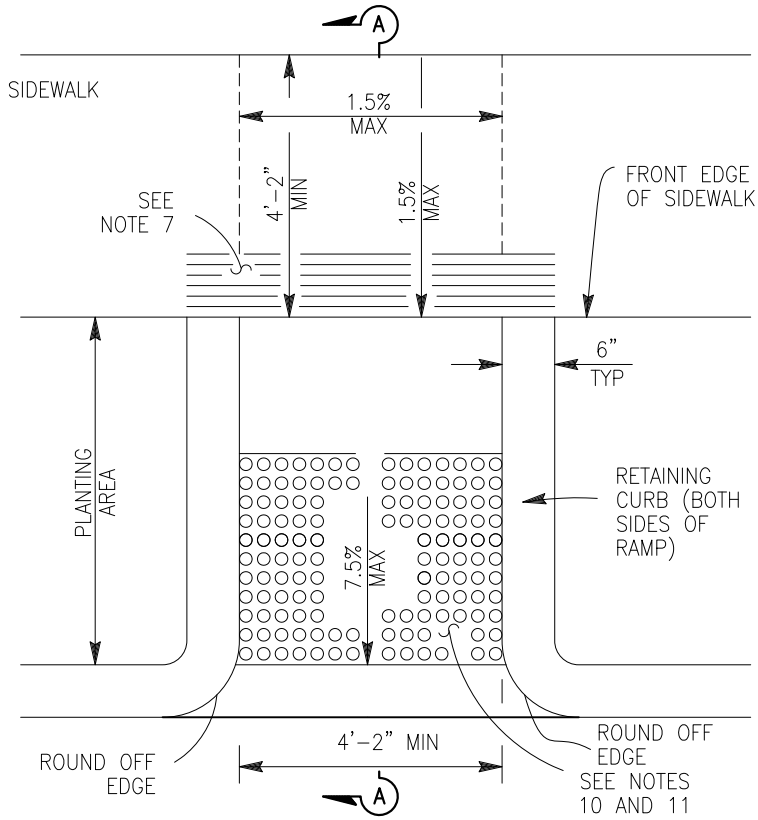

CASE F

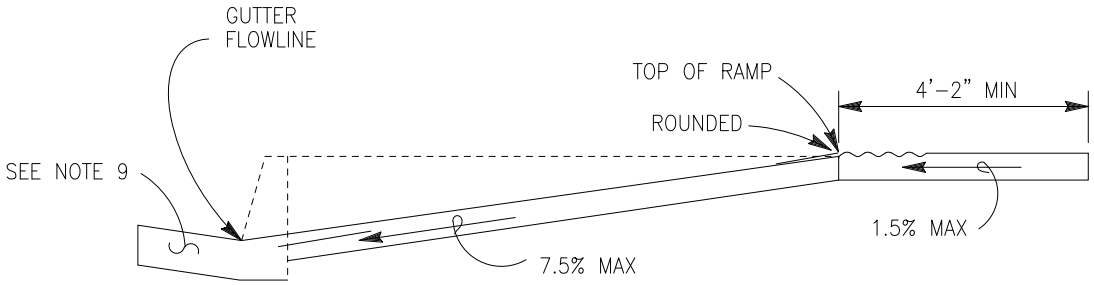

SECTION A-A

FOR NOTES SEE SHEET ST 9.11

SCALE: NTS

CITY OF ALBANY, CALIFORNIA	STANDARD DETAIL	
APPROVED BY: Ray Chan DATE: DECEMBER 2015	CURB RAMP DETAILS (CASE F)	STD DETAIL No. ST 9.7

K:\Standard Specifications and details\Details\CAD Drawings\ST 9 Curb Ramp Details.dwg

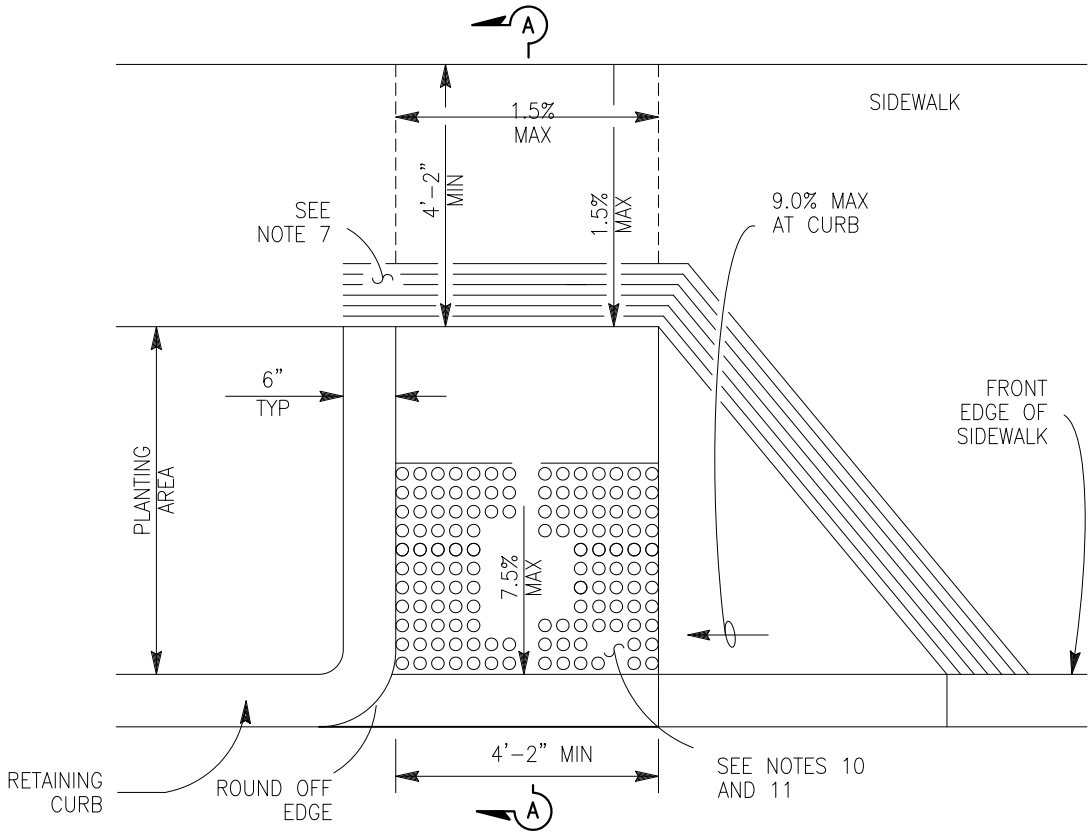

CASE G
SEE NOTE 4

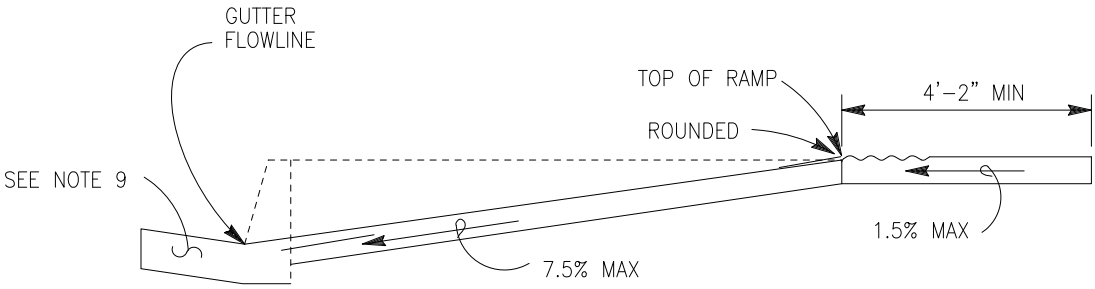

SECTION A-A

FOR NOTES SEE SHEET ST 9.11

SCALE: NTS

CITY OF ALBANY, CALIFORNIA	STANDARD DETAIL	
APPROVED BY: Ray Chan DATE: DECEMBER 2015	CURB RAMP DETAILS (CASE G)	STD DETAIL No. ST 9.8

K:\Standard Specifications and details\Details\CAD Drawings\ST 9 Curb Ramp Details.dwg

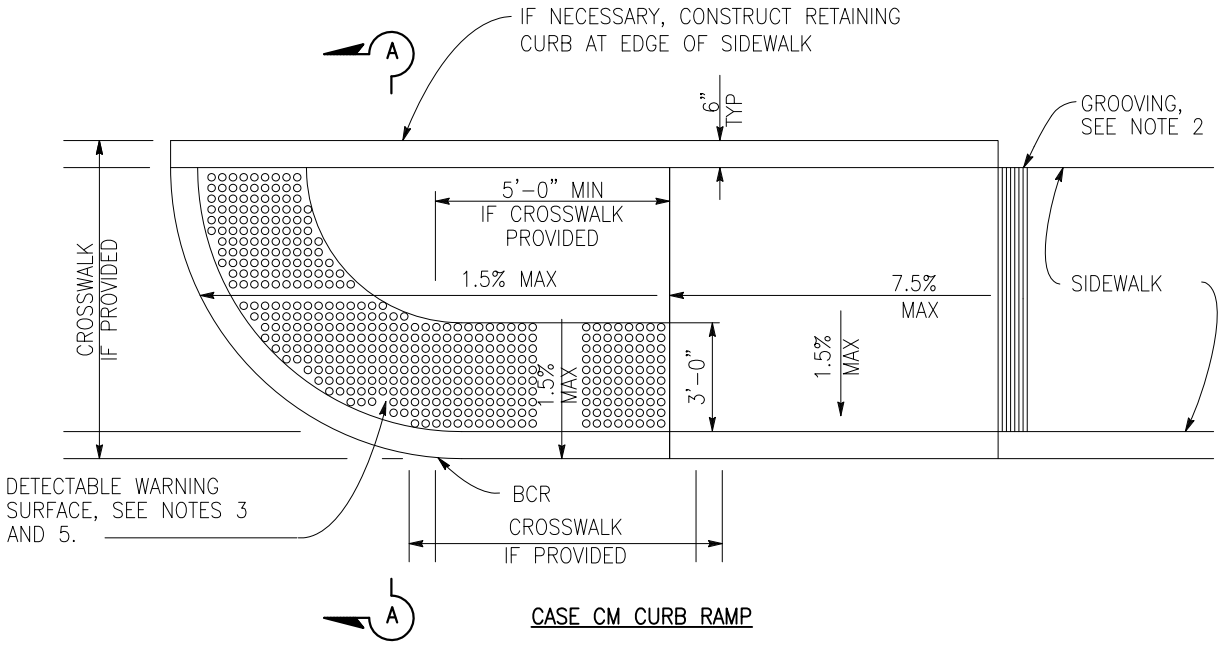

CASE CM CURB RAMP

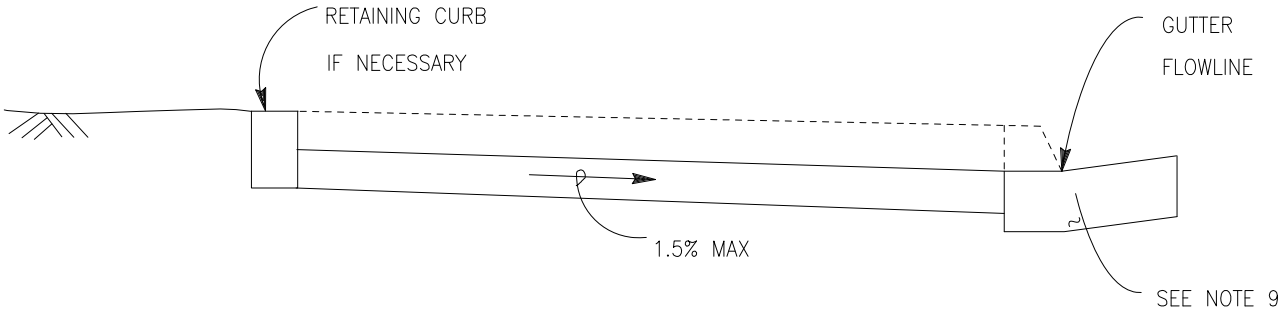

SECTION A–A

FOR NOTES SEE SHEET ST 9.11

SCALE: NTS

CITY OF ALBANY, CALIFORNIA	STANDARD DETAIL	
APPROVED BY: Ray Chan DATE: DECEMBER 2015	CURB RAMP DETAILS (CASE CM)	STD DETAIL No. ST 9.9

K:\Standard Specifications and details\Details\CAD Drawings\ST 9 Curb Ramp Details.dwg

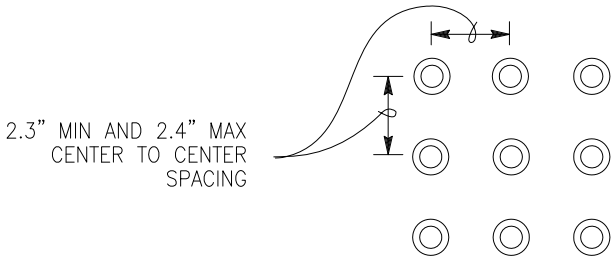

RAISED TRUNCATED DOME PATTERN (IN-LINE)
DETECTABLE WARNING SURFACE
SEE NOTE 10

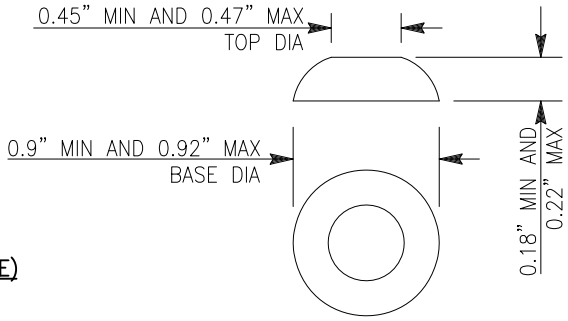

RAISED TRUNCATED DOME

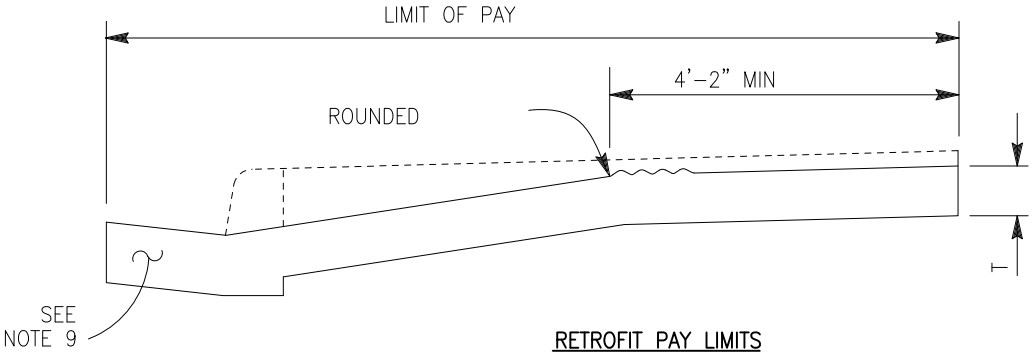

RETROFIT PAY LIMITS
EXISTING CURB AND SIDEWALK

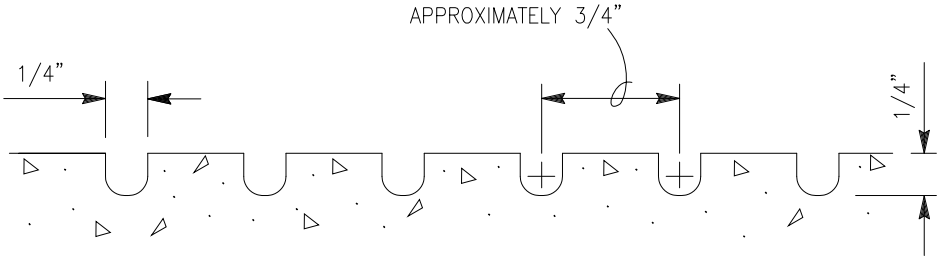

GROOVING DETAIL

FOR NOTES SEE SHEET ST 9.11

CITY OF ALBANY, CALIFORNIA		STANDARD DETAIL
APPROVED BY: Ray Chan DATE: DECEMBER 2015	CURB RAMP DETAILS - GROOVING AND DOMES	STD DETAIL No. ST 9.10

K:\Standard Specifications and details\Details\CAD Drawings\ST 9 Curb Ramp Details.dwg

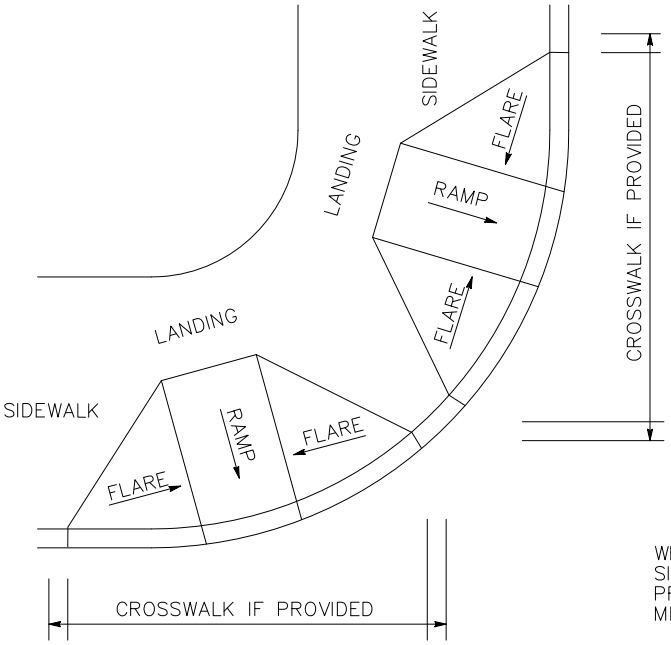

DETAIL A

TYPICAL TWO–RAMP CORNER INSTALLATION

SEE NOTE 1

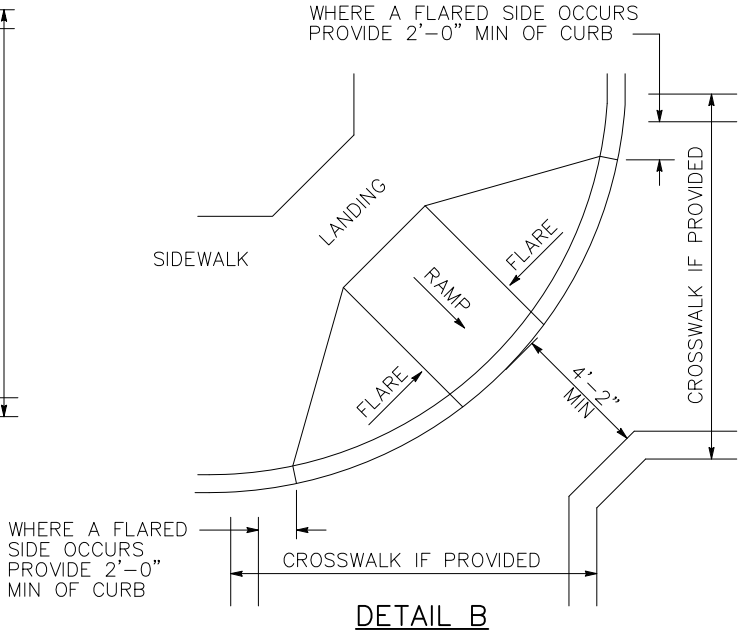

DETAIL B

TYPICAL ONE–RAMP CORNER INSTALLATION

SEE NOTES 1 AND 3

1. AS SITE CONDITIONS DICTATE, CASE A THROUGH CASE G CURB RAMPS MAY BE USED FOR CORNER INSTALLATIONS SIMILAR TO THOSE SHOWN IN DETAIL A AND DETAIL B. THE CASE OF CURB RAMPS USED IN DETAIL A DO NOT HAVE TO BE THE SAME. CASE A THROUGH CASE G CURB RAMPS ALSO MAY BE USED AT MID BLOCK LOCATIONS, AS SITE CONDITIONS DICTATE.
2. IF DISTANCE FROM CURB TO BACK OF SIDEWALK IS TOO SHORT TO ACCOMMODATE RAMP AND 4'–2" PLATFORM (LANDING) AS SHOWN IN CASE A, THE SIDEWALK MAY BE DEPRESSED LONGITUDINALLY AS IN CASE B, OR C OR MAY BE WIDENED AS IN CASE D.
3. WHEN RAMP IS LOCATED IN CENTER OF CURB RETURN, CROSSWALK CONFIGURATION MUST BE SIMILAR TO THAT SHOWN FOR DETAIL B.
4. AS SITE CONDITIONS DICTATE, THE RETAINING CURB SIDE AND THE FLARED SIDE OF THE CASE G RAMP SHALL BE CONSTRUCTED IN REVERSED POSITION.
5. IF LOCATED ON A CURVE, THE SIDES OF THE RAMP NEED NOT BE PARALLEL, BUT THE MINIMUM WIDTH OF THE RAMP SHALL BE 4'–2".
6. SIDE SLOPE OF RAMP FLARES VARY UNIFORMLY FROM A MAXIMUM OF 9.0% AT CURB TO CONFORM WITH LONGITUDINAL SIDEWALK SLOPE ADJACENT TO TOP OF THE RAMP, EXCEPT IN CASE C AND CASE F.
7. THE CURB RAMP SHALL BE OUTLINED, AS SHOWN, WITH A 1'–0" WIDE BORDER WITH," GROOVES APPROXIMATELY 3/4" ON CENTER. SEE GROOVING DETAIL.
8. TRANSITIONS FROM RAMPS AND LANDING TO WALKS, GUTTERS OR STREETS SHALL BE FLUSH (NO LIP) AND FREE OF ABRUPT CHANGES.
9. COUNTER SLOPES OF ADJOINING GUTTERS AND ROAD SURFACES IMMEDIATELY ADJACENT TO AND WITHIN 24 INCHES OF THE CURB RAMP SHALL NOT BE STEEPER THAN 1:20 (5.0%). GUTTER PAN SLOPE SHALL NOT EXCEED 1" OF DEPTH FOR EACH 2'–0" OF WIDTH.
10. CURB RAMPS SHALL HAVE A DETECTABLE WARNING SURFACE THAT EXTENDS THE FULL WIDTH AND 3'–0" DEPTH OF THE RAMP. A 4'–0" WIDE DETECTABLE WARNING SURFACE MAY BE USED ON A 4'–2" WIDE CURB RAMP. DETECTABLE WARNING SURFACES SHALL CONFORM TO THE REQUIREMENTS IN THE STANDARD SPECIFICATIONS.
11. THE EDGE OF THE DETECTABLE WARNING SURFACE NEAREST THE STREET SHALL BE BETWEEN 6" AND 8" FROM THE GUTTER FLOWLINE.
12. UTILITY PULL BOXES, MANHOLES, VAULTS AND ALL OTHER UTILITY FACILITIES WITHIN THE BOUNDARIES OF THE CURB RAMP WILL BE RELOCATED OR ADJUSTED TO GRADE BY THE OWNER PRIOR TO, OR IN CONJUNCTION WITH, CURB RAMP CONSTRUCTION.
13. DETECTABLE WARNING SURFACE MAY HAVE TO BE CUT TO ALLOW REMOVAL OF UTILITY COVERS WHILE MAINTAINING FULL DETECTABLE WARNING WIDTH AND DEPTH.

CITY OF ALBANY, CALIFORNIA		STANDARD DETAIL
APPROVED BY: Ray Chan DATE: DECEMBER 2015	CURB RAMP DETAILS (NOTES)	STD DETAIL No. ST 9.11

K:\Standard Specifications and details\Details\CAD Drawings\ST 9 Curb Ramp Details.dwg

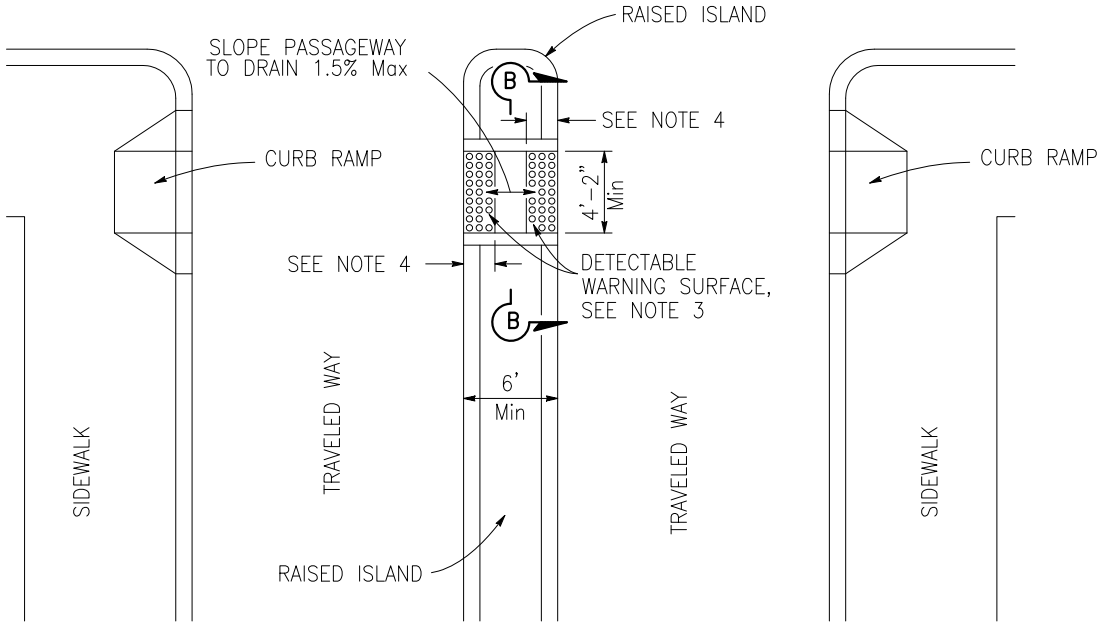

TYPE A PASSAGEWAY

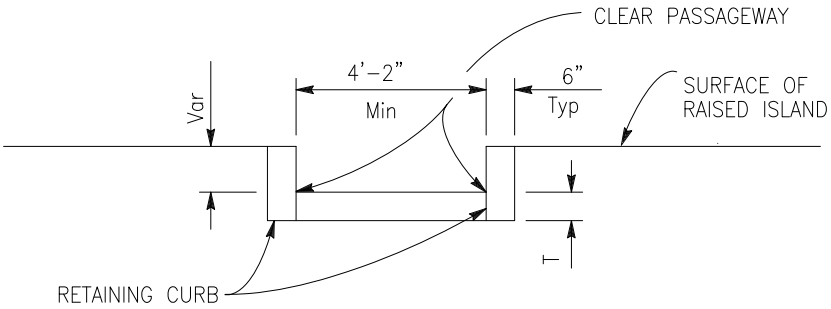

SECTION B-B

FOR NOTES SEE SHEET ST 10.4

SCALE: NTS

CITY OF ALBANY, CALIFORNIA	STANDARD DETAIL	
APPROVED BY: Ray Chan DATE: DECEMBER 2015	ISLAND PASSAGEWAY DETAILS (TYPE A)	STD DETAIL No. ST 10.1

K:\Standard Specifications and details\Details\CAD Drawings\ST 10 Island Passageway Details.dwg

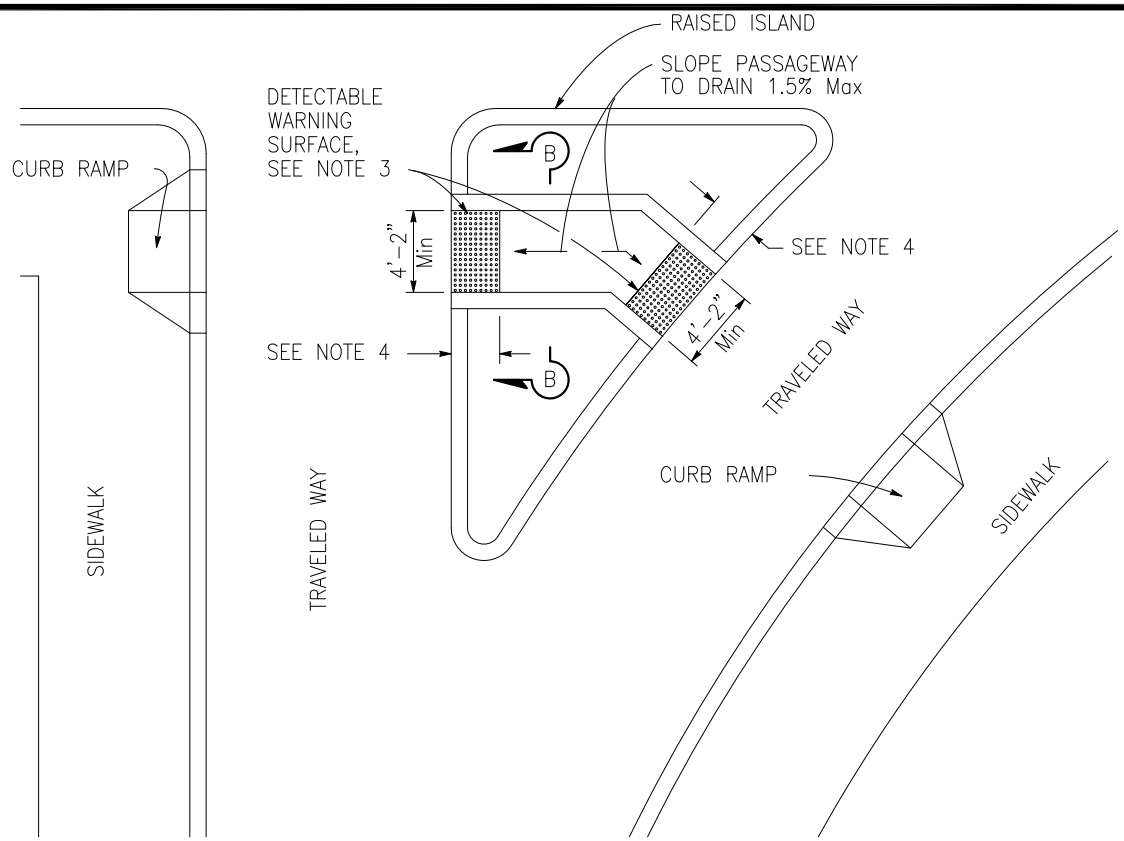

TYPE B PASSAGEWAY

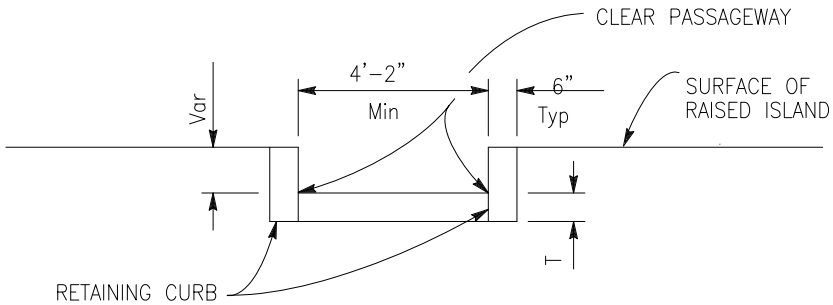

SECTION B-B

FOR NOTES SEE SHEET ST 10.4

SCALE: NTS

CITY OF ALBANY, CALIFORNIA	STANDARD DETAIL	
APPROVED BY: Ray Chan DATE: DECEMBER 2015	ISLAND PASSAGEWAY DETAILS (TYPE B)	STD DETAIL No. ST 10.2

K:\Standard Specifications and details\Details\CAD Drawings\ST 10 Island Passageway Details.dwg

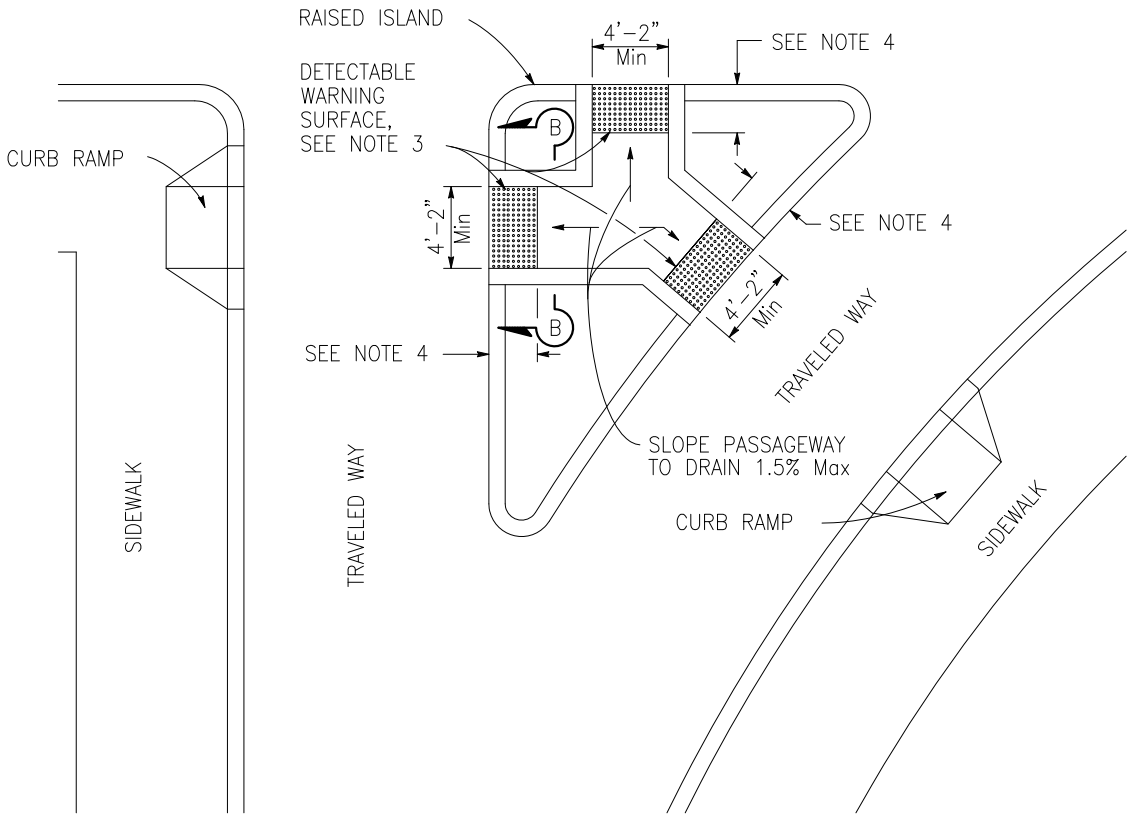

TYPE C PASSAGEWAY

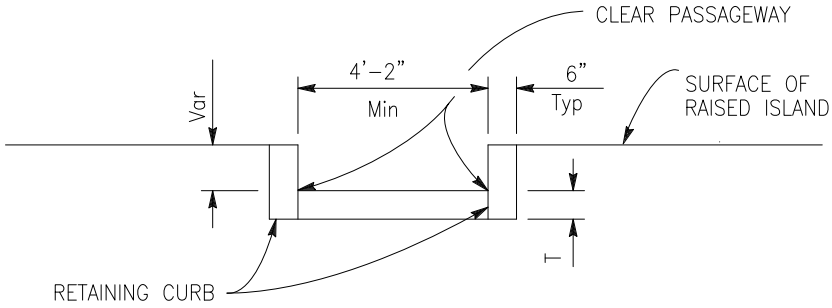

SECTION B-B

FOR NOTES SEE SHEET ST 10.4

SCALE: NTS

CITY OF ALBANY, CALIFORNIA		**STANDARD DETAIL**
APPROVED BY: Ray Chan DATE: DECEMBER 2015	**ISLAND PASSAGEWAY DETAILS (TYPE C)**	STD DETAIL No. **ST 10.3**

K:\Standard Specifications and details\Details\CAD Drawings\ST 10 Island Passageway Details.dwg

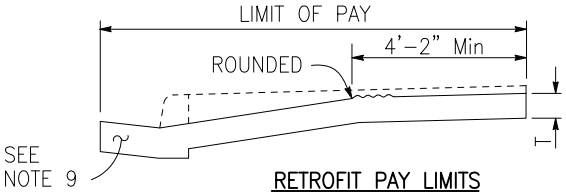

RETROFIT PAY LIMITS

Existing curb and sidewalk

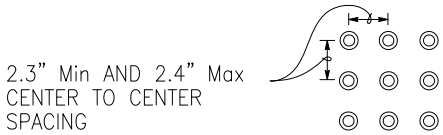

RAISED TRUNCATED DOME PATTERN (IN-LINE)

DETECTABLE WARNING SURFACE

See Note 10

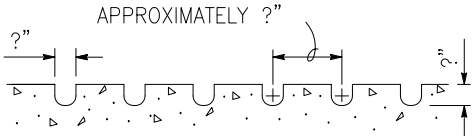

GROOVING DETAIL

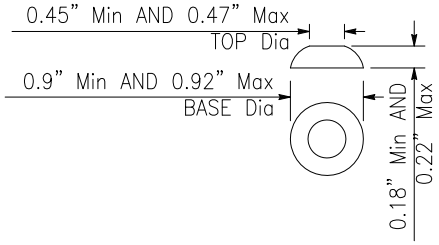

RAISED TRUNCATED DOME

NOTES:

1. SIDEWALK, RAMP AND PASSAGEWAY THICKNESS, "T", SHALL BE 3" MINIMUM.
2. FOR DETAILS OF GROOVING USED WITH CASE CM CURB RAMP, SEE STANDARD DETAIL ST 7A SHEET 8.
3. FOR DETAILS OF DETECTABLE WARNING SURFACES, SEE REVISED STANDARD DETAIL 7A.
4. WHERE AN ISLAND PASSAGEWAY LENGTH IS GREATER THAN OR EQUAL TO 6'-0", BUT LESS THAN 8'-0", EACH DETECTABLE WARNING SURFACE SHALL EXTEND THE FULL WIDTH AND 2'-0" DEPTH OF THE PASSAGEWAY LENGTH. WHERE AN ISLAND PASSAGEWAY LENGTH IS GREATER THAN OR EQUAL TO 8'-0", EACH DETECTABLE WARNING SURFACE SHALL EXTEND THE FULL WIDTH AND 3'-0" DEPTH OF THE PASSAGEWAY LENGTH. A 4'-0" WIDE DETECTABLE WARNING SURFACE MAY BE USED ON A 4'-2" WIDE ISLAND PASSAGEWAY.
5. FOR CASE CM CURB RAMP, THE EDGE OF THE DETECTABLE WARNING SURFACE NEAREST THE STREET SHALL BE BETWEEN 6" AND 8" FROM THE GUTTER FLOW LINE. REFER TO STANDARD DETAIL ST 7A, SHEET 8 FOR DETAILS.
6. TRANSITIONS FROM RAMPS TO WALKS, GUTTERS OR STREETS SHALL BE FLUSH (NO LIP) AND FREE OF ABRUPT CHANGES.
7. UTILITY PULL BOXES, MANHOLES, VAULTS AND ALL OTHER UTILITY FACILITIES WITHIN THE BOUNDARIES OF THE CURB RAMP WILL BE RELOCATED OR ADJUSTED TO GRADE BY THE OWNER PRIOR TO, OR IN CONJUNCTION WITH, CURB RAMP CONSTRUCTION.
8. DETECTABLE WARNING SURFACE MAY HAVE TO BE CUT TO ALLOW REMOVAL OF UTILITY COVERS WHILE MAINTAINING FULL DETECTABLE WARNING WIDTH AND DEPTH. FOR ADDITIONAL CURB RAMP DETAILS, SEE STANDARD DETAIL ST 7A.

CITY OF ALBANY, CALIFORNIA		STANDARD DETAIL
APPROVED BY: Ray Chan DATE: DECEMBER 2015	ISLAND PASSAGEWAY DETAILS AND NOTES	STD DETAIL No. ST 10.4

K:\Standard Specifications and details\Details\CAD Drawings\ST 10 Island Passageway Details.dwg

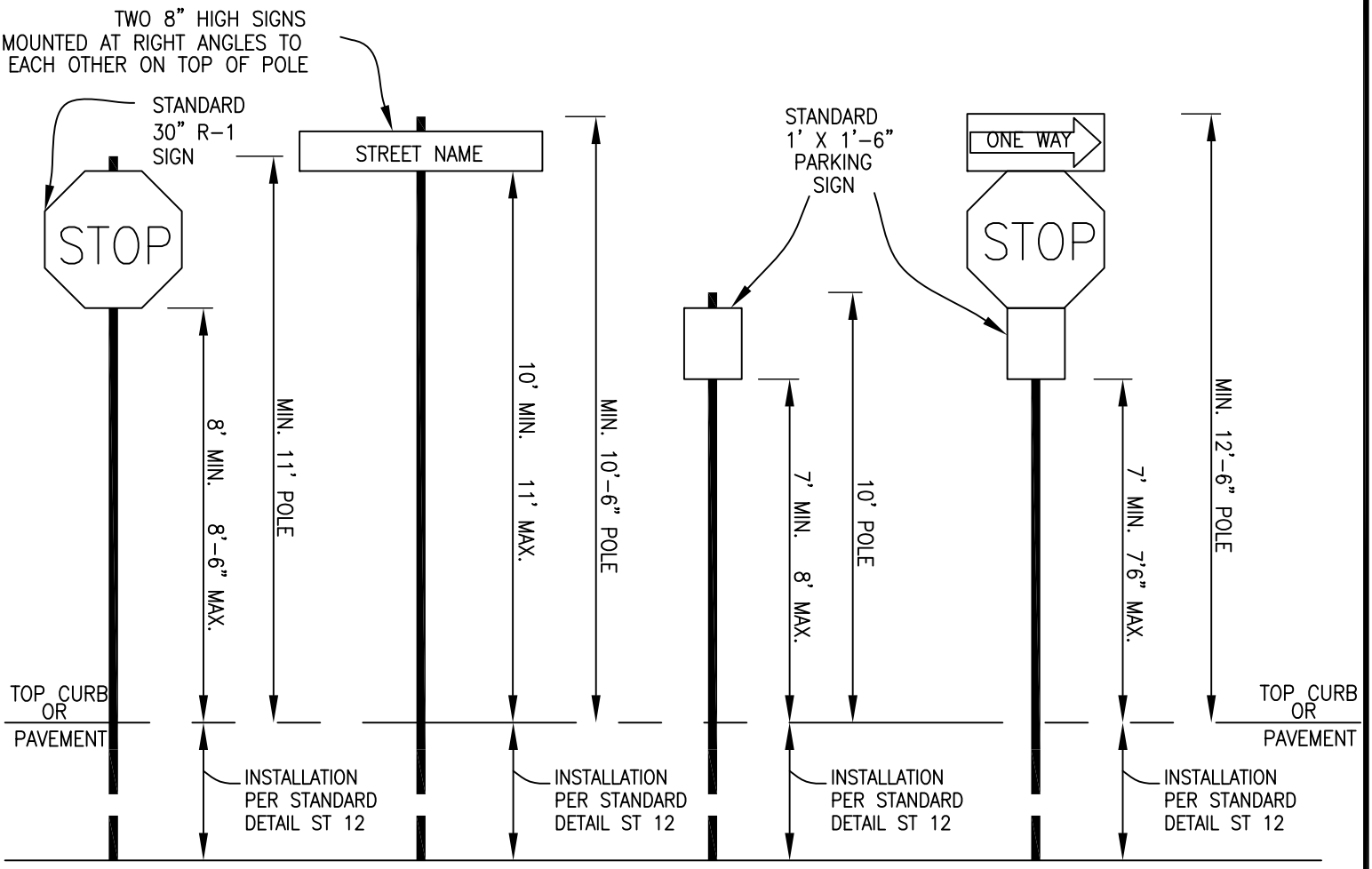

ALL OTHER SIGNS – MINIMUM 7' FROM GROUND LEVEL TO BOTTOM EDGE OF SIGN

ALL SIGNS TO BE MOUNTED ON UNISTRUT TELESPAR OR WESTERN HIGHWAY 1-3/4" SQUARE TUBULAR SIGN POLES. COLOR: POWDER FINISH DARK GREEN. POLES TO BE SECURED IN GROUND USING UNISTRUT TELESPAR OR WESTERN HIGHWAY SYSTEM. SIGNS TO BE ATTACHED TO POLES, AND POLES ATTACHED TO ANCHORS AND COLLARS, USING UNISTRUT OR WESTERN HIGHWAY PLATED STEEL OR ALUMINUM RIVETS.

SCALE: NTS

CITY OF ALBANY, CALIFORNIA	STANDARD DETAIL	
APPROVED BY: Ray Chan DATE: DECEMBER 2015	STREET & TRAFFIC SIGN MOUNTING STANDARDS	STD DETAIL No. ST 11

K:\Standard Specifications and details\Details\CAD Drawings\ST 11 Street & Traffic Sign Mounting Standards.dwg

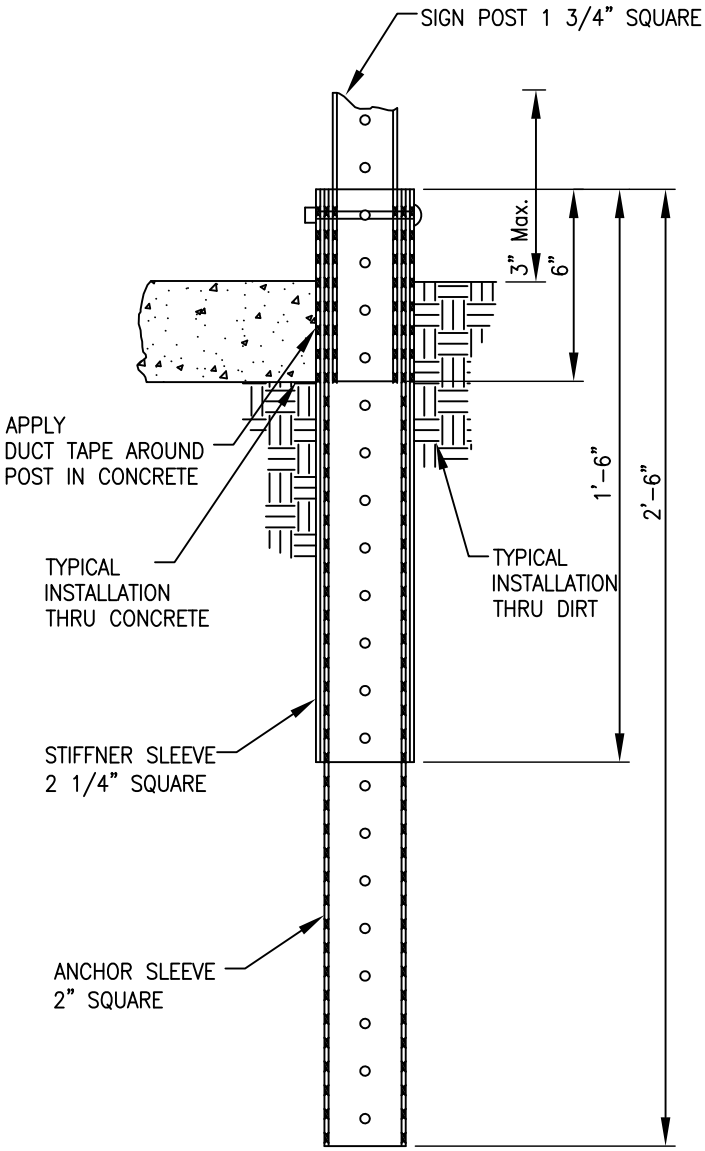

TYPICAL SECTION

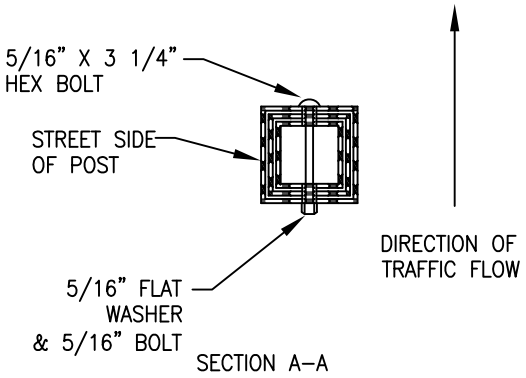

SECTION A–A

NOTE: ANCHOR SLEEVE + STIFFNER = ANCHOR ASSEMBLY

SCALE: NTS

CITY OF ALBANY, CALIFORNIA		STANDARD DETAIL
APPROVED BY: Ray Chan DATE: DECEMBER 2015	SIGN ANCHOR DETAIL	STD DETAIL No. ST 12

K:\Standard Specifications and details\Details\CAD Drawings\ST 12 Sign Anchor Detail.dwg

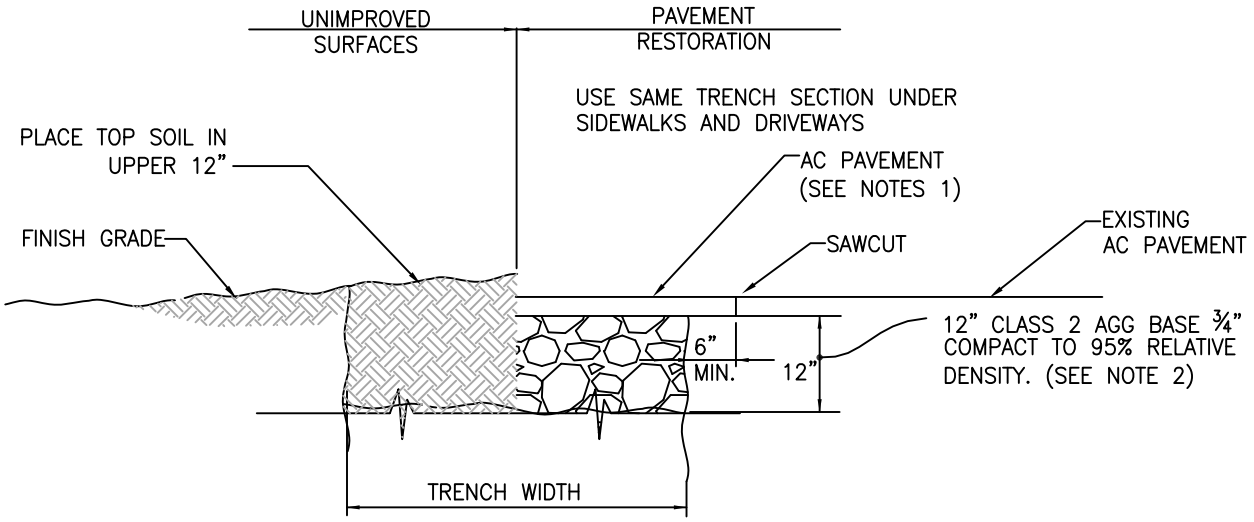

TRENCH SURFACE RESTORATION DETAIL

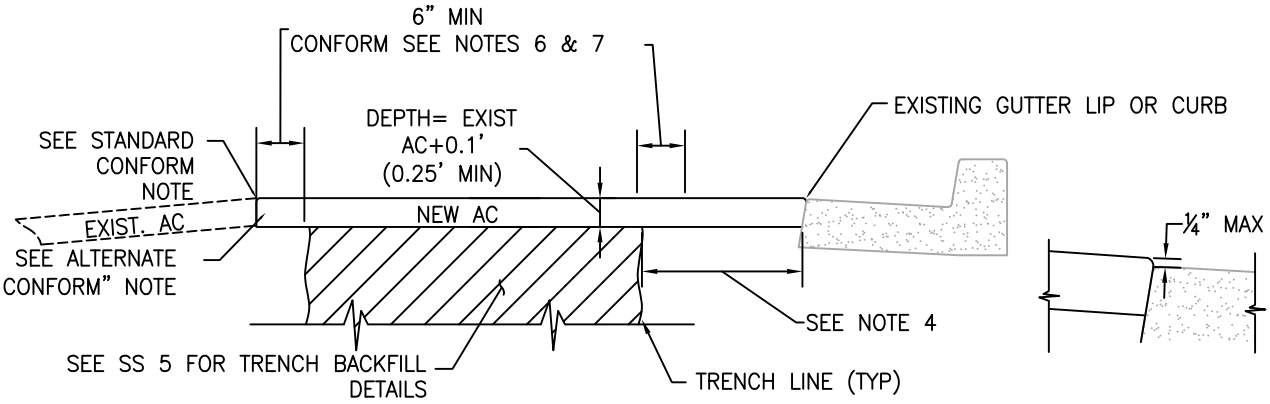

DETAIL AT GUTTER

DETAIL A
GUTTER LIP PAVING

NOTES:

1. MATCH EXISTING ASPHALT THICKNESS PLUS 1" (3" THICK MINIMUM).
2. WHEN APPROVED BY THE ENGINEER CDF MAY BE USED AS AN ALTERNATE FOR AGG BASE FOR SHALLOW PIPELINES PROVIDING MEASURES ARE TAKEN TO PREVENT PIPE FLOTATION.
3. THE FINAL LIFT OF AC IN STREETS SHALL BE COMPACTED WITH A ROLLER APPROVED BY THE ENGINEER.
4. WHEN THE TRENCH PARALLELS CURB AND THE NEAREST TRENCH LINE IS LESS THAN 2 FEET FROM THE GUTTER LIP OR CURB WHEN NO GUTTER EXISTS, ALL EXISTING ASPHALT CONCRETE SHALL BE REPLACED TO THE GUTTER LIP. FOR GUTTER LIP PAVING DETAIL SEE DETAIL "A".
5. ASPHALT CONCRETE SHALL BE ½" TYPE A ASPHALT CONCRETE UNLESS OTHERWISE SPECIFIED OR DIRECTED BY THE CITY ENGINEER.
6. THE ASPHALT CONCRETE SHALL BE CUT THROUGH THE FULL DEPTH OF EXISTING ASPHALT CONCRETE TO A NEAT STRAIGHT LINE AT LEAST 6" OUTSIDE THE TRENCH LINE. PAVEMENT EDGES DAMAGED DURING CONSTRUCTION SHALL BE RE-CUT TO NEAT LINES PRIOR TO PAVING. POINT BINDER (TACK COAT) SHALL BE APPLIED TO ALL VERTICAL SURFACES IN OCCORDANCE WITH THE LATEST EDITION OF CALTRANS STANDARD SPECIFICATIONS.
7. THE EXISTING ASPHALT CONCRETE OUTSIDE THE TRENCH LINE MAY BE GROUND TO A MINIMUM DEPTH OF 0.20 FEET TO A NEAT STRAIGHT LINE AT LEAST 6" OUTSIDE THE TRENCH LNE. THE EXISTING ASPHALT CONCRETE AT THE TRENCH LINES SHALL BE CUT THROUGH THE FULL DEPTH OF THE EXISTING ASPHALT CONCRETE TO A NEAT STRAIGHT LINE. ANY PAVEMENT EDGES, INCLUDING GROUND EDGES, DAMAGED DURING CONSTRUCTION SHALL BE RE-CUT OR RE-GROUND TO NEAT LINES PRIOR TO PAVING. POINT BINDER (TACT COAT) SHALL BE APPLIED TO ALL VERTICAL SURFACES IN OCCORDANCE WITH LATEST EDITION OF CALTRANS STANDARD SPECIFICATIONS.

SCALE: NTS

CITY OF ALBANY, CALIFORNIA		**STANDARD DETAIL**
APPROVED BY: Ray Chan DATE: DECEMBER 2015	**TRENCH SURFACE RESTORATION DETAIL**	STD DETAIL No. **ST 13**

K:\Standard Specifications and details\Details\CAD Drawings\ST 13 Trench Surface Restoration Detail.dwg

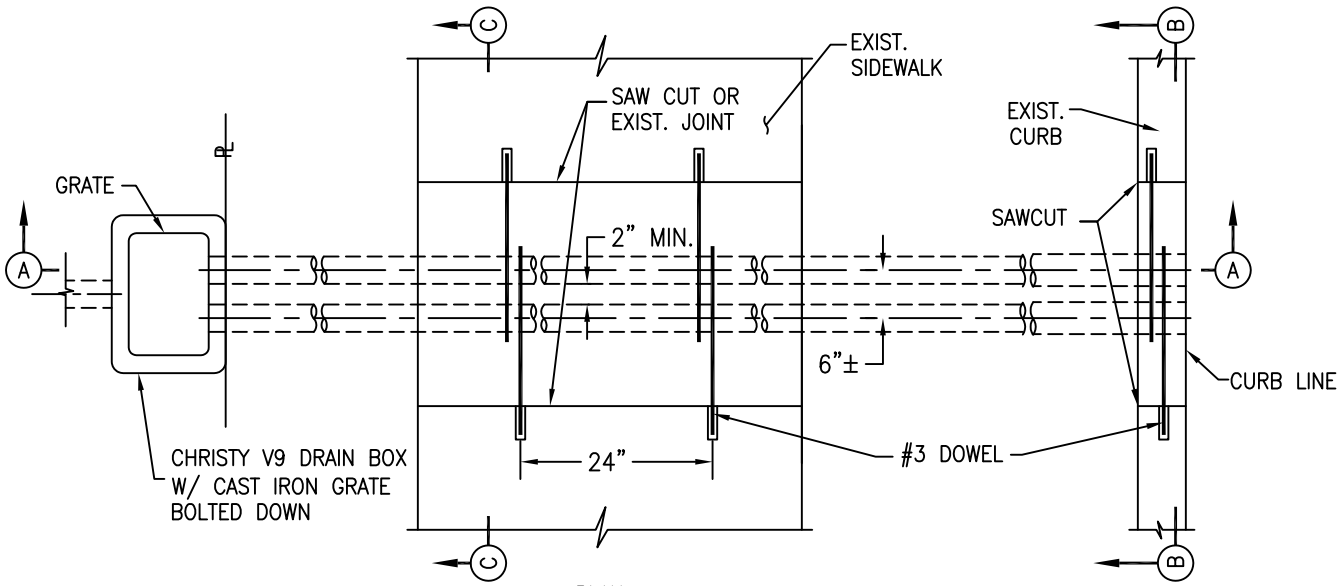

PLAN

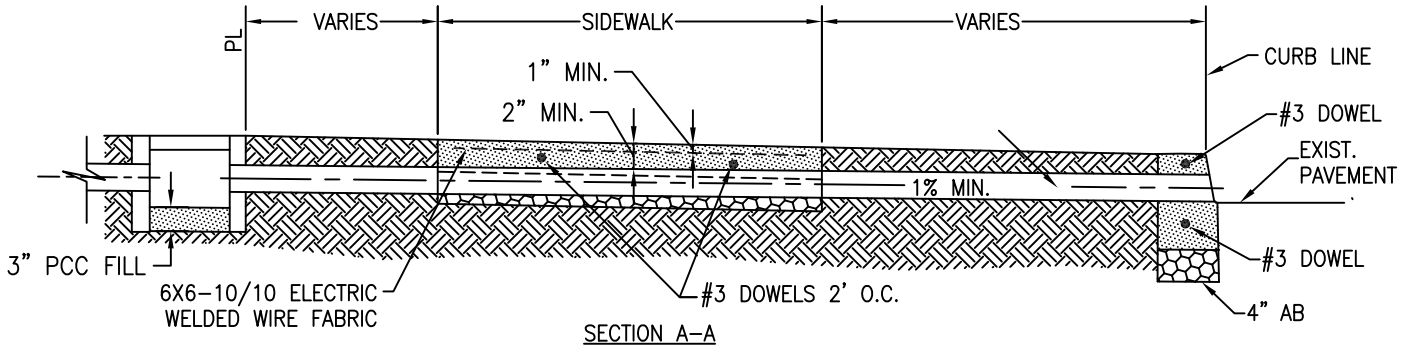

SECTION A–A

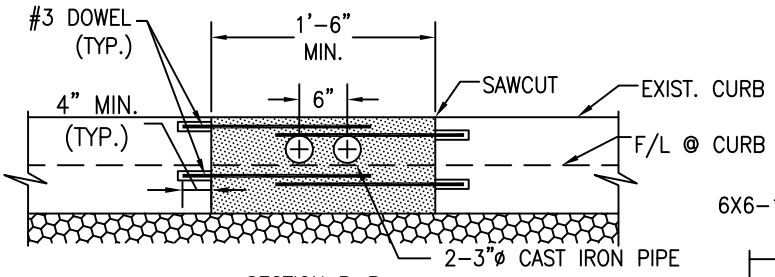

SECTION B–B

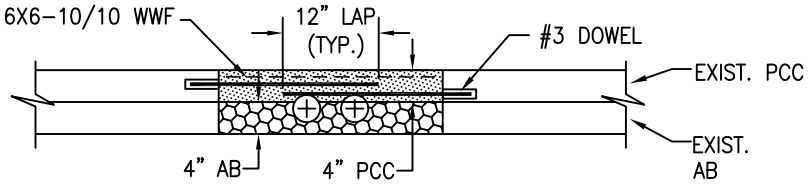

SECTION C–C

SCALE: NTS

CITY OF ALBANY, CALIFORNIA	STANDARD DETAIL	
APPROVED BY: Ray Chan DATE: DECEMBER 2015	SIDEWALK DRAIN RESIDENTIAL LOTS	STD DETAIL No. ST 14

K:\Standard Specifications and details\Details\CAD Drawings\ST 14 Sidewalk Drain Residential Lots.dwg

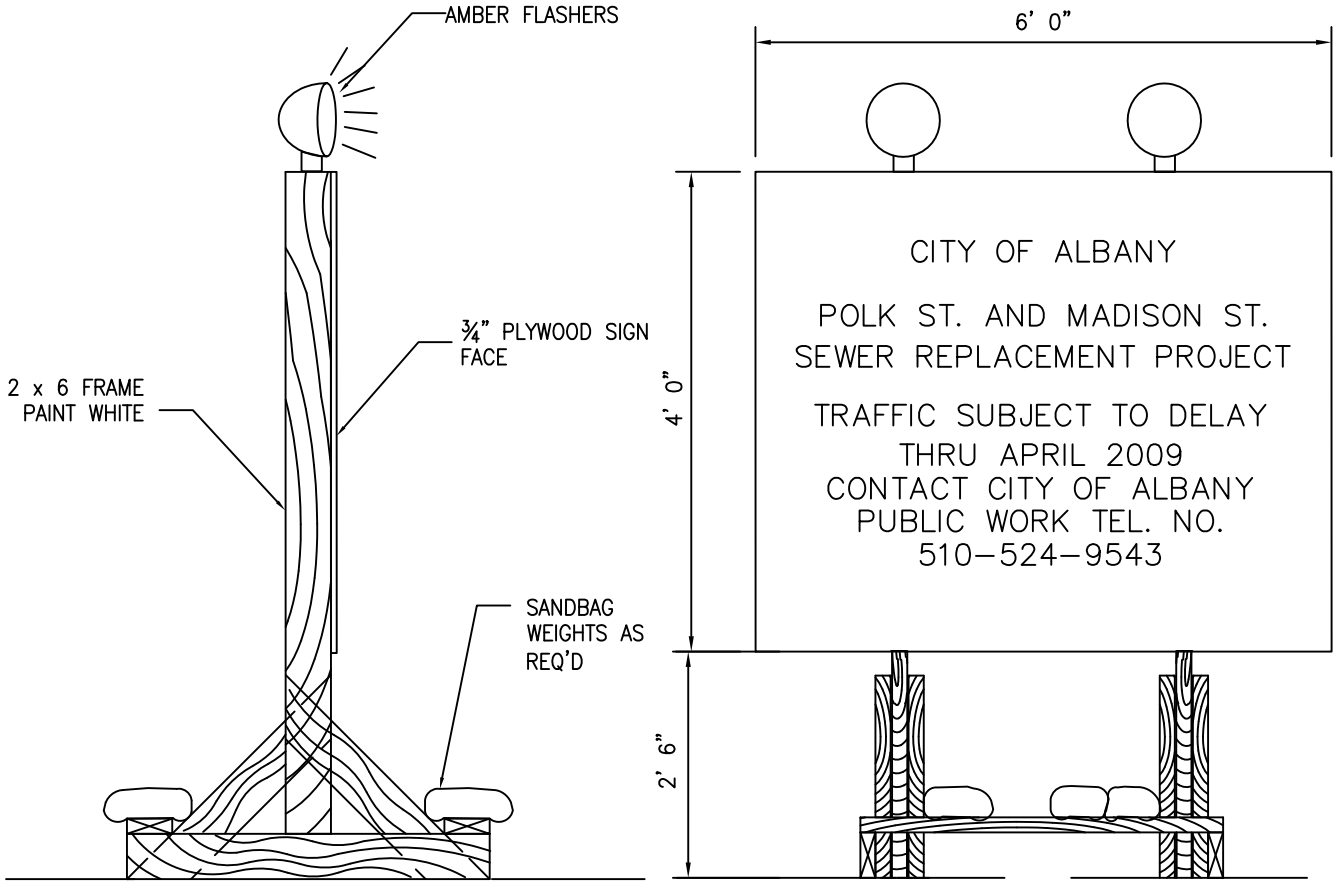

NOTES:

1. SIGNS SHALL HAVE SERIES D BLACK LETTERS ON REFLECTIVE WHITE BACKGROUND PLACE TYPE I SIGNS IN A VISIBLE LOCATION.
2. SIGN TO BE PLACED ON EITHER SIDE OF WORK AREA.
3. LOCATION OF SIGN SHALL BE AS APPROVED BY THE CITY ENGINEER.

SCALE: NTS

CITY OF ALBANY, CALIFORNIA	STANDARD DETAIL	
APPROVED BY: Ray Chan DATE: DECEMBER 2015	CONSTRUCTION WARNING SIGN	STD DETAIL No. ST 15

K:\Standard Specifications and details\Details\CAD Drawings\ST 15 Construction Warning Sign.dwg

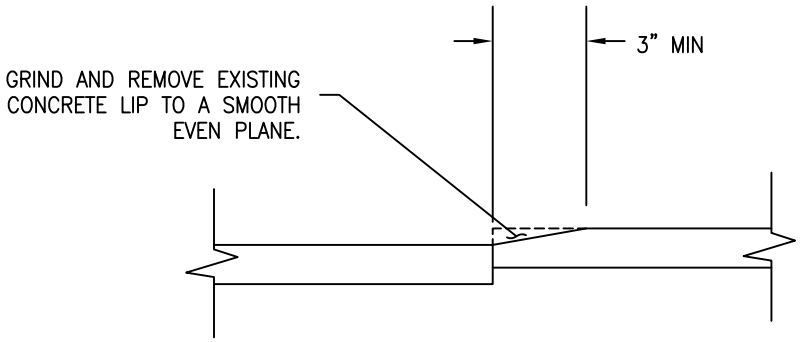

SIDEWALK ELEVATION VIEW

NOTES:

1. THE UNIT FOR PAYMENT SHALL BE INCH–FOOT (IN.–FT)
2. MEASUREMENT FOR PAYMENT SHALL BE MADE BY MULTIPLYING THE LENGTH OF THE CUT BY THE AVERAGE DEPTH OF THE CUT.
3. CUT SHALL EXTEND FOR FULL WIDTH OF SIDEWALK, EDGE TO EDGE
4. PROTECT CITIZENS AND ALL PRIVATE AND PUBLIC FACILITIES FROM DAMAGE OR HARM.
5. LEVEL AND RESHAPE EXISTING SOD AS NECESSARY.
6. SITE CLEAN–UP SHALL BE ACCOMPLISHED AS SOON AS SAWCUTTING OPERATION IS COMPLETE.
7. ONLY THOSE PANELS WHICH ARE IN GOOD CONDITION AND NOT SUBJECT TO REPLACEMENT IN ACCORDANCE WITH PLAN No. 291 (DEFECTIVE CONCRETE) OF THE APWA MANUAL OF STANDARD PLANS SHALL BE SAWCUT.

SCALE: NTS

CITY OF ALBANY, CALIFORNIA	STANDARD DETAIL	
APPROVED BY: Ray Chan DATE: DECEMBER 2015	SIDEWALK TRIP HAZARD REMOVAL	STD DETAIL No. ST 16

K:\Standard Specifications and details\Details\CAD Drawings\ST 16 Sidewalk Trip Hazard Removal.dwg

NPDES MEDELLION

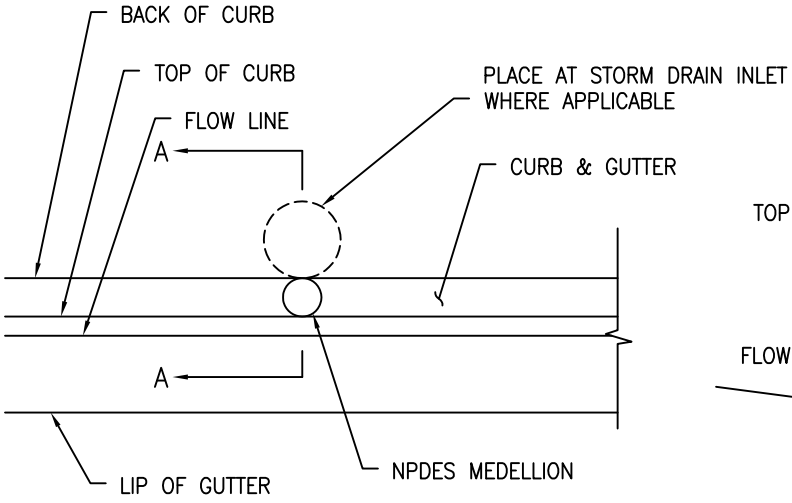

PLAN

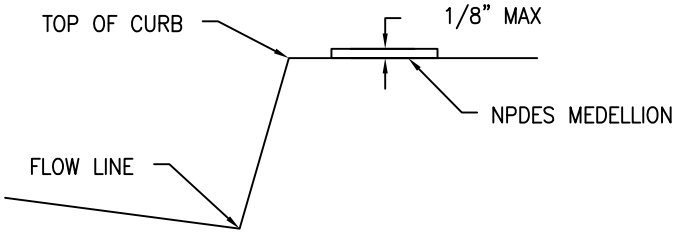

SECTION A–A

PLAN:

1. ORIENT MEDALLION TEXT TO BE READ FROM THE SIDEWALK. EPOXY MEDALLION WITH PREMIUM POLYURETHANE CONSTRUCTION ADHESIVE. ADHESIVE MUST DEVELOP FULL SRENGTH IN 24 HOURS OR LESS AND MEET ASTM C–557, DS498.

2. MEDALLION SHALL BE LOCATED BEHIND THE BACK OF CURB IN LOCATIONS WITH EXISTING OR PLANNED RED CURBS.

SCALE: NTS

CITY OF ALBANY, CALIFORNIA	STANDARD DETAIL	
APPROVED BY: Ray Chan DATE: DECEMBER 2015	NPDES MEDALLION	STD DETAIL No. ST 17

K:\Standard Specifications and details\Details\CAD Drawings\ST 17 NPDES Medallion.dwg

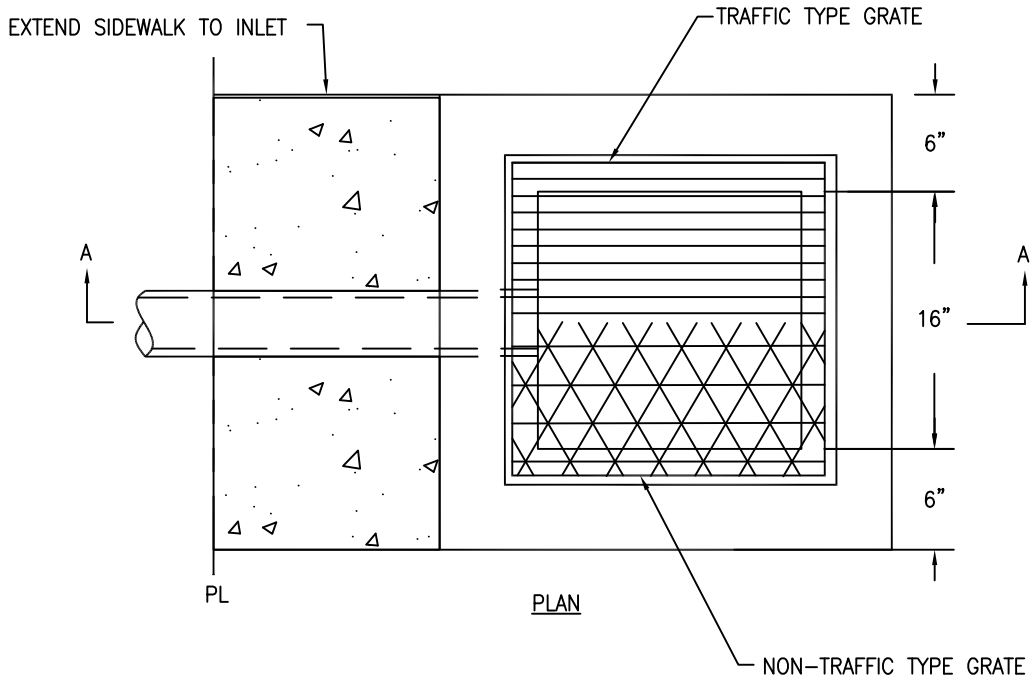

PLAN

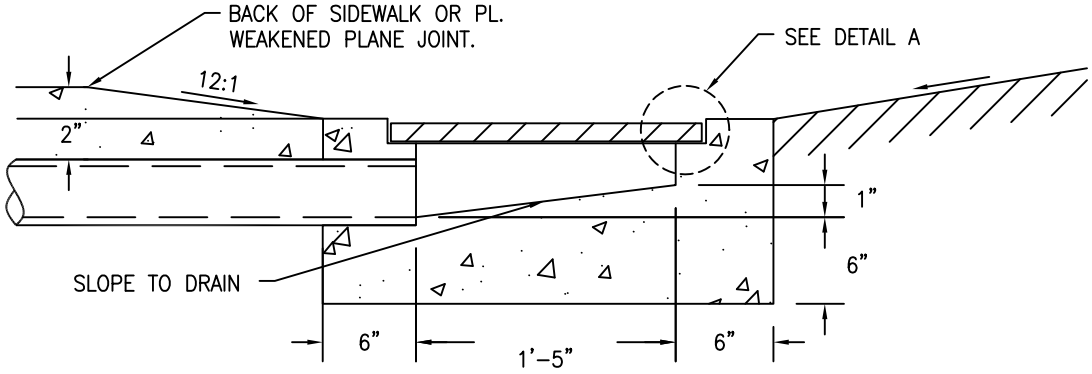

SECTION A-A

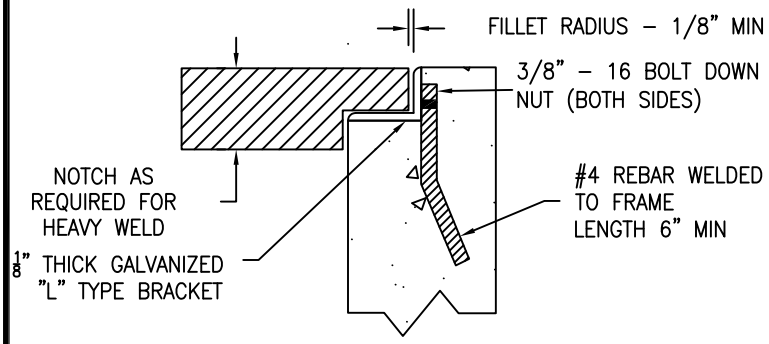

DETAIL A

NOTES

1. FOR ADDITIONAL CAPACITY, ADJACENT DRAINS MAY BE INSTALLED AND THE WIDTH OF INLET SHALL BE INCREASED AS REQUIRED. MINIMUM CLEAR DISTANCE BETWEEN DRAINS AT CURB FACE SHALL BE 6 INCHES.
2. ADJACENT DRAINS SHALL BE THE SAME TYPE
3. IN TRAFFIC AREAS, THE GRATE SHALL BE US CONCRETE PRECAST GROUP (CENTRAL PRECAST) HEAVY GRATE, OR APPROVED EQUAL.
4. IN NON-TRAFFIC AREAS THE GRATE SHALL BE US CONCRETE PRECAST GROUP (CENTRAL PRECAST) STANDARD GRATE, OR APPROVED EQUAL.
5. EACH GRATE SHALL BE PROVIDED WITH A MINIMUM OF TWO (2) LOCKING DEVICES.

SCALE: NTS

CITY OF ALBANY, CALIFORNIA	STANDARD DETAIL	
APPROVED BY: Ray Chan DATE: DECEMBER 2015	SIDEWALK CROSS DRAIN	STD DETAIL No. ST 18

K:\Standard Specifications and details\Details\CAD Drawings\ST 18 Sidewalk Cross Drain.dwg

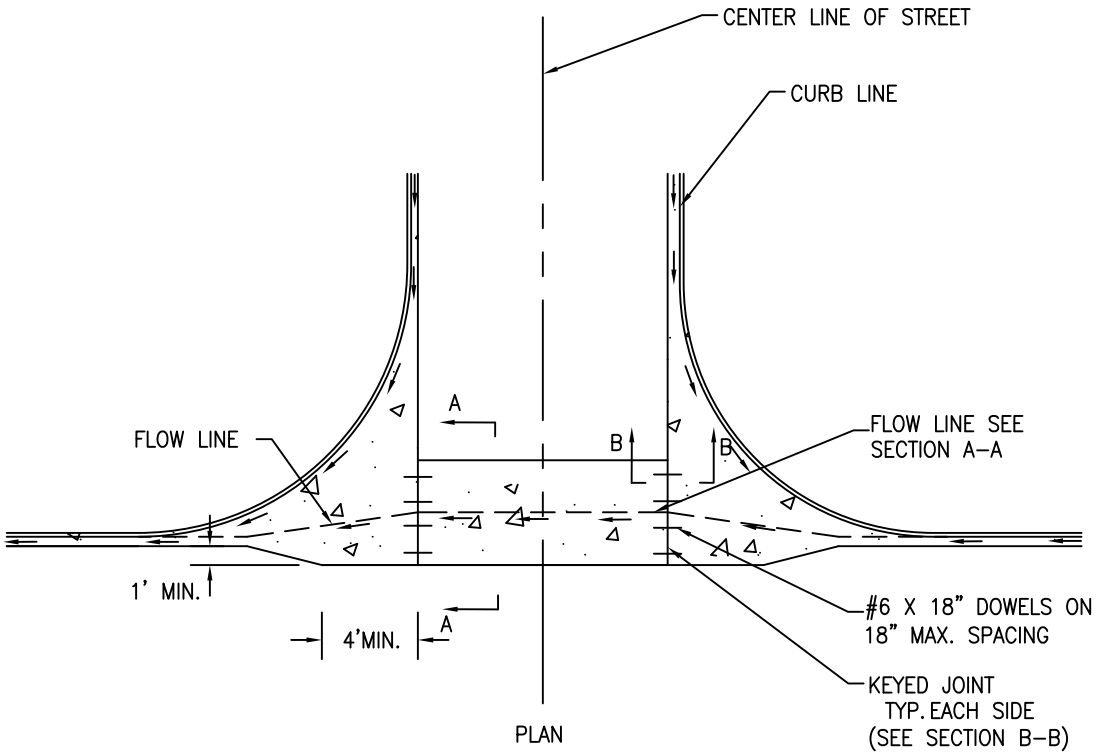

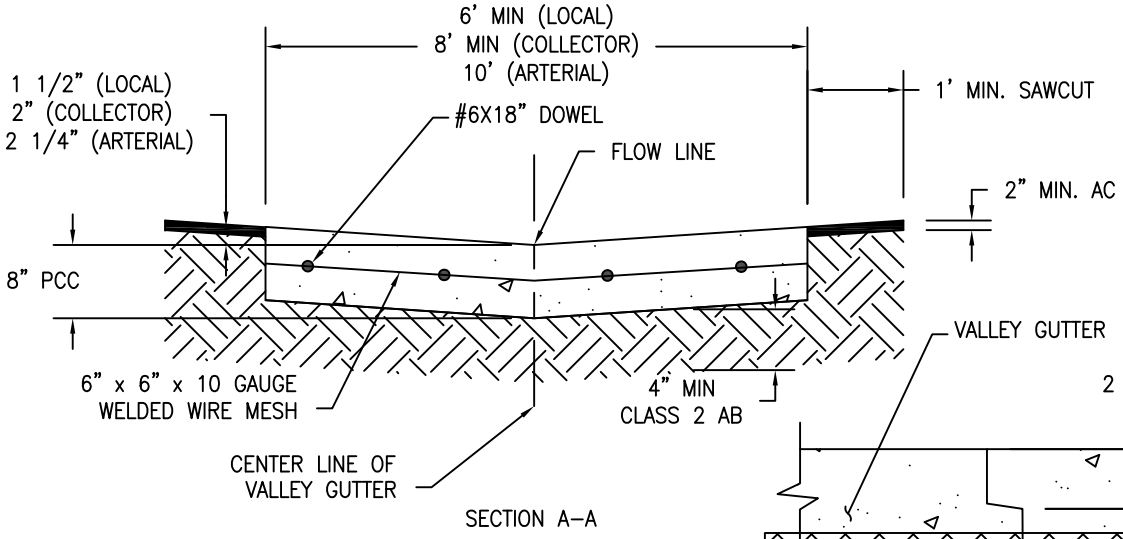

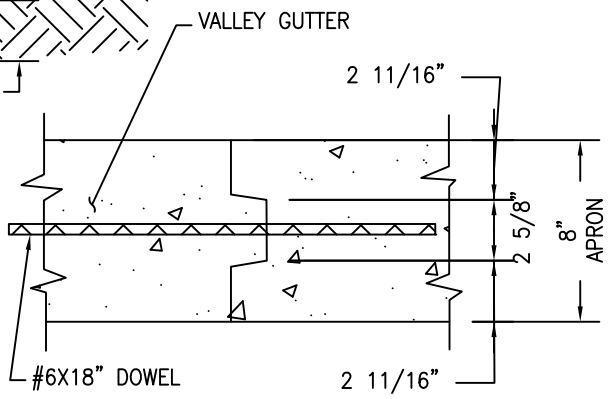

NOTES:

1. ALL NOTES AND DIMENSION SYSMETRICAL ABOUT CENTERLINE
2. PROVIDE A SMOOTH TRANSITION FROM VALLEY TO END OF RETURN.
3. ALL INTERSECTIONS TO HAVE ACCESS RAMPS DESIGNED IN ACCORDANCE WITH ADA STANDARDS

SCALE: NTS

CITY OF ALBANY, CALIFORNIA	STANDARD DETAIL	
APPROVED BY: Ray Chan DATE: DECEMBER 2015	CONCRETE VALLEY GUTTER AND APRON	STD DETAIL No. ST 19

K:\Standard Specifications and details\Details\CAD Drawings\ST 19 Conc Valley Gutter and Apron.dwg

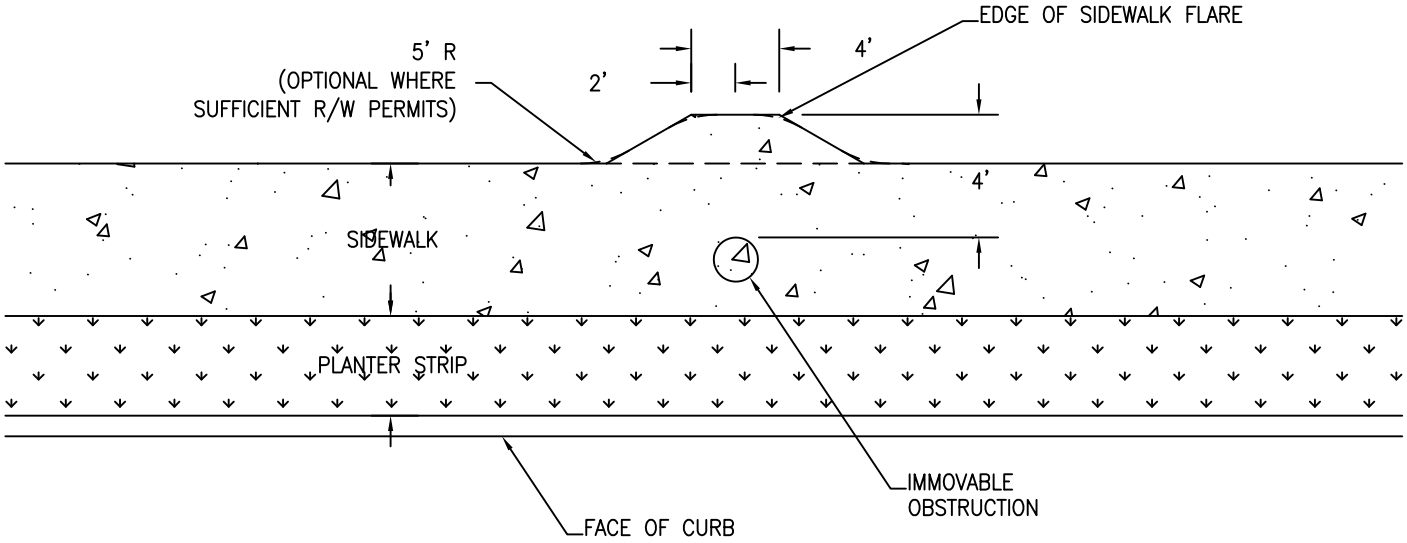

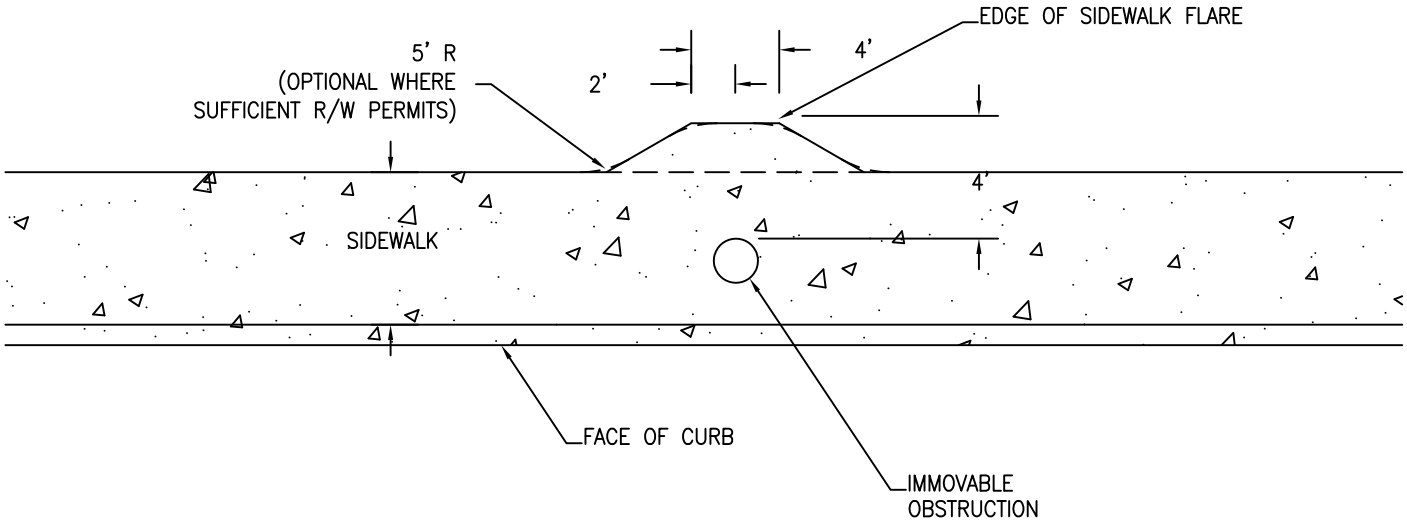

NOTES:

1. RELOCATE SIDEWALK OBSTRUCTIONS BEHIND THE SIDEWALK AREA WITHIN A PUBLIC SERVICE EASEMENT
2. WHEN OBSTRUCTIONS CANNOT BE MOVED AND A 3-FOOT CLEAR AREA BETWEEN AN OBSTRUCTION AND THE EDGE OF SIDEWALK IS NOT AVAILABLE, A RETROFIT SIDEWALK FLARE MAY BE USED. FLARE CONSTRUCTION SHALL CONFORM TO STANDARD CITY SIDEWALK REQUIREMENTS.
3. USE OF THE SIDEWALK FLARE DETAIL SHALL BE APPROVED BY THE CITY ENGINEER FOR SPECIAL RETROFIT SITUATIONS ONLY. THIS DETAIL WILL NOT BE ALLOWED AS A CORRECTION IMPROPERLY PLACED FACILITIES.

SCALE: NTS

CITY OF ALBANY, CALIFORNIA	STANDARD DETAIL	
APPROVED BY: Ray Chan DATE: DECEMBER 2015	RETROFIT SIDEWALK FLARE FOR OBSTRUCTIONS	STD DETAIL No. ST 20

K:\Standard Specifications and details\Details\CAD Drawings\ST 20 Retrofit Sidewalk Flare for Obstructions.dwg

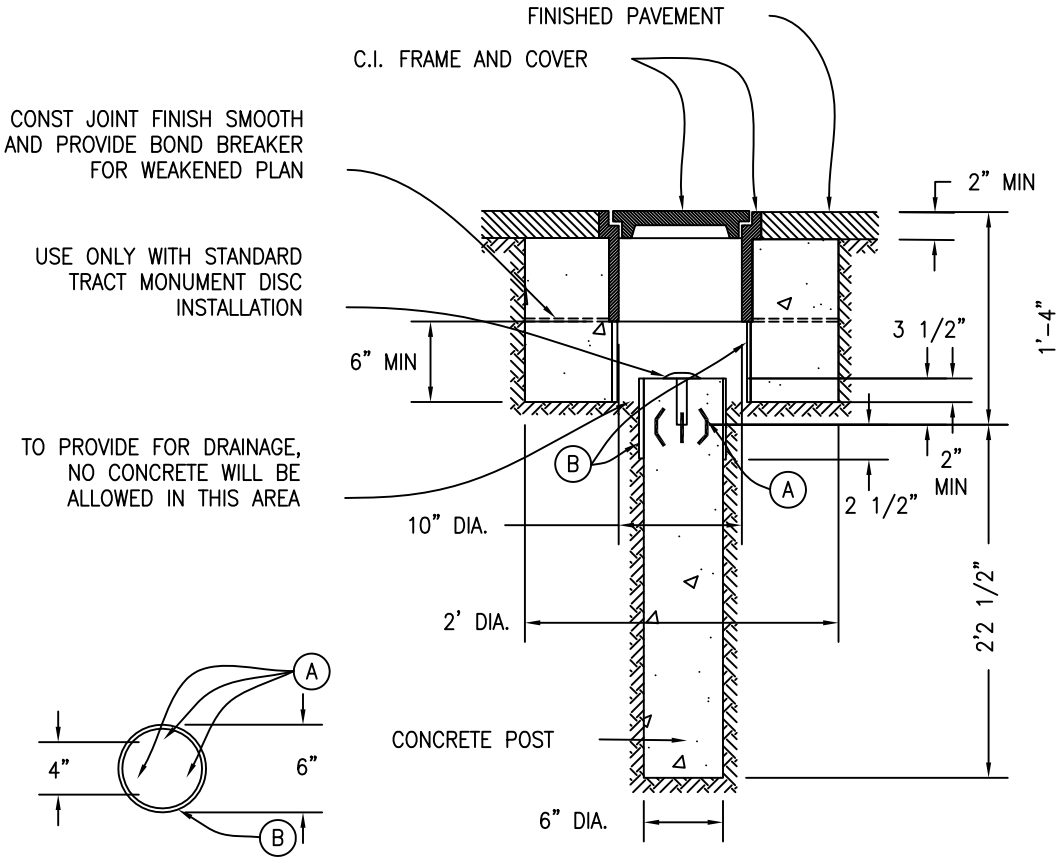

NOTES:

MONUMENT FRAMES AND COVERS SHALL BE:

1. NEENAH FOUNDRY COMPANY, CATALOG NO. R-1975-B, LID TYPE C WITHMONUMENT ON THE LID.
2. CHRISP CASTING PERT NO. 9279, +277M
3. OTHER MANUFACTURERS MODELS APPROVED BY THE CITY OF ALBANY DEPARTMENT OF PUBLIC WORKS SHALL BE EQUAL IN SERVICE AND FUNCTION. EACH COVER SHALL BE GROUND OR OTHERWISE FINISHED SO THAT IT WILL FIT IN ITS FRAME WITHOT ROCKING. CONCRETE SHALL BE EITHER CLASS A OR CLASS B, POURED IN PLACE AGAINST THE EXISTING GROUND.

(A) INSTALL 3 OR MORE 1/4" X 3" METAL DOWELS EXTENDING 1' ABOVE SURFACE OF CONCRETE. BEND AS SHOWN.

(B) PROVIDE A FORM OF SHEET METAL OR 3/32" THICK WAX-IMPREGNATED PAPER.

SCALE: NTS

CITY OF ALBANY, CALIFORNIA	STANDARD DETAIL	
APPROVED BY: Ray Chan DATE: DECEMBER 2015	CONCRETE MONUMENT SECTION WITH DISC	STD DETAIL No. ST 21

K:\Standard Specifications and details\Details\CAD Drawings\ST 21 Concrete Monument Section with Disc.dwg

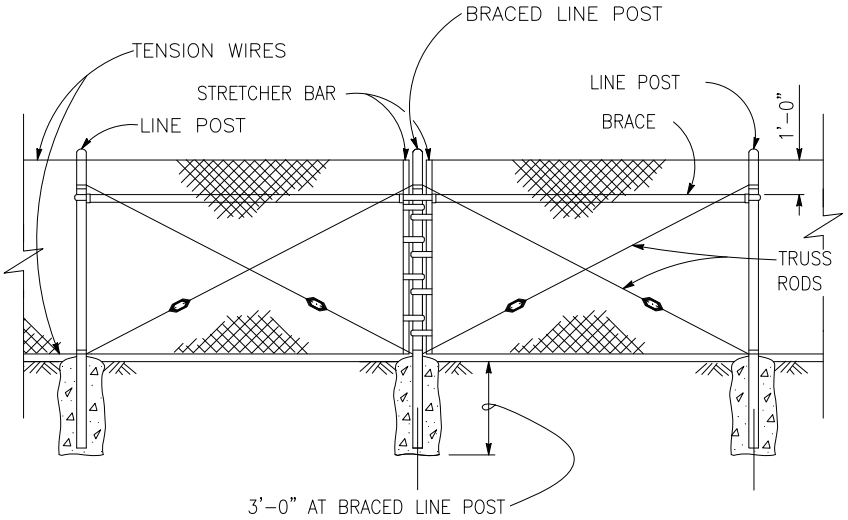

BRACED LINE POST INSTALLATION
BRACED LINE POST AT INTERVALS NOT EXCEEDING 1000'

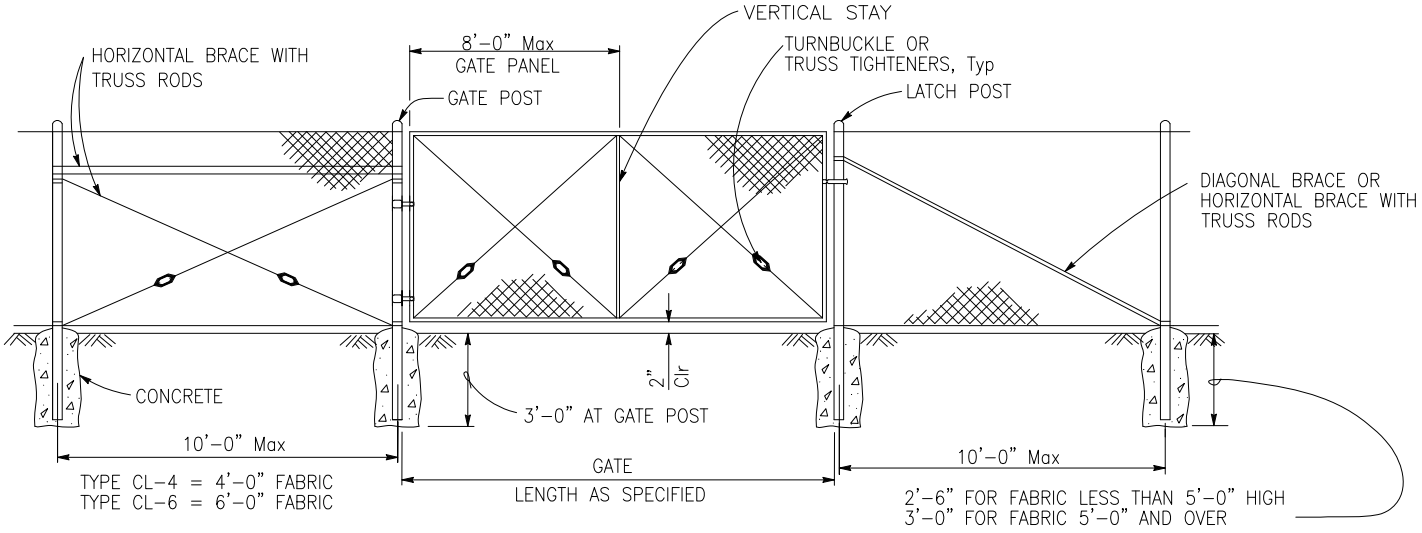

CHAIN LINK GATE INSTALLATION

NOTES AND SCHEDULE ON SHEET 2

SCALE: NTS

CITY OF ALBANY, CALIFORNIA		**STANDARD DETAIL**
APPROVED BY: Ray Chan DATE: DECEMBER 2015	**CHAIN LINK FENCE AND GATE**	STD DETAIL No. **ST 22.1**

K:\Standard Specifications and details\Details\CAD Drawings\ST 22 Chain Link Fence and Gate.dwg

GATE POST			
FENCE HEIGHT	GATE WIDTHS	ROUND OD PIPE	WEIGHT (lb/ft)
6'–0" AND LESS	UP THRU 6'–0"	2.875"	5.80
	OVER 6'–0" THRU 12'–0"	4.500"	10.80
	OVER 12'–0" THRU 18'–0"	5.563"	14.63
	OVER 18'–0" TO 24'–0" Max	6.625"	18.99
OVER 6'–0" TO 8'–0" Max	UP THRU 6'–0"	3.500"	7.58
	OVER 6'–0" THRU 12'–0"	5.563"	14.63
	OVER 12'–0" THRU 18'–0"	6.625"	18.99
	OVER 18'–0" TO 24'–0" Max	8.625"	28.58

ABOVE POST DIMENSIONS AND WEIGHTS ARE MINIMUMS.
LARGER SIZES MAY BE USED UPON APPROVAL.

TYPICAL MEMBER DIMENSIONS (See Notes)										
FENCE HEIGHT	LINE POSTS				END, LATCH AND CORNER POSTS		BRACES			
	ROUND OD PIPE	WEIGHT (lb/ft)	ROLL FORMED		ROUND OD PIPE	WEIGHT (lb/ft)	ROUND OD PIPE	WEIGHT (lb/ft)	ROLL FORMED	
			SECTION	WEIGHT (lb/ft)					SECTION	WEIGHT (lb/ft)
6'–0" AND LESS	1.900"	2.72	1.875" x 1.625"	1.85	2.375"	3.65	1.66"	2.27	1.625" x 1.25"	1.35
OVER 6'–0" TO 8'–0" Max	2.375"	3.65	2.25" x 1.70"	2.78	2.875"	5.80	1.66"	2.27	1.625" x 1.25"	1.35

NOTES:

1. THE TABLE BELOW SHOWS MINIMUM SIZED POSTS AND BRACES COMPLYING WITH THE SPECIFICATIONS. LARGER OR HEAVIER POST AND BRACE SIZES MAY BE USED UPON APPROVAL
2. SECTIONS SHOWN IN THE TABLES MUST ALSO COMPLY WITH THE STRENGTH REQUIREMENTS AND OTHER PROVISIONS OF THE SPECIFICATIONS.
3. OTHER SECTIONS WHICH COMPLY WITH THE STRENGTH REQUIREMENTS AND OTHER PROVISIONS OF THE SPECIFICATIONS MAY BE USED UPON APPROVAL.
4. OPTIONS EXERCISED SHALL BE UNIFORM ON ANY ONE PROJECT.
5. OFFSET TO BE 2'–0" AT MONUMENT LOCATIONS, MEASURED AT RIGHT ANGLES TO R/W LINES. TAPER TO ACHIEVE OFFSET TO BE AT LEAST 20'–0" LONG.
6. SEE REVISED STANDARD PLAN RSP A85B FOR BRACE, STRETCHER BAR, AND TRUSS TIGHTENER DETAILS.

SCALE: NTS

CITY OF ALBANY, CALIFORNIA **STANDARD DETAIL**

APPROVED BY: Ray Chan

DATE: DECEMBER 2015

CHAIN LINK FENCE AND GATE - NOTES

STD DETAIL No. **ST 22.2**

K:\Standard Specifications and details\Details\CAD Drawings\ST 22 Chain Link Fence and Gate.dwg