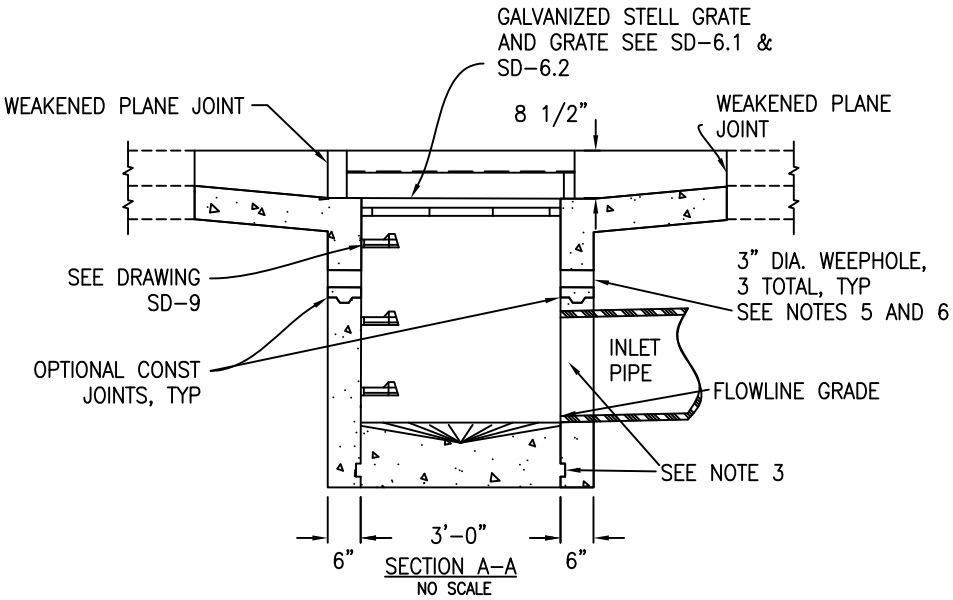

SECTION A-A
NO SCALE

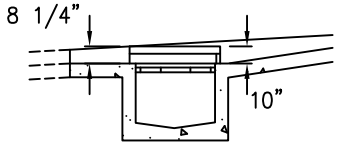

DETAIL FOR STEEP CURB SLOPE

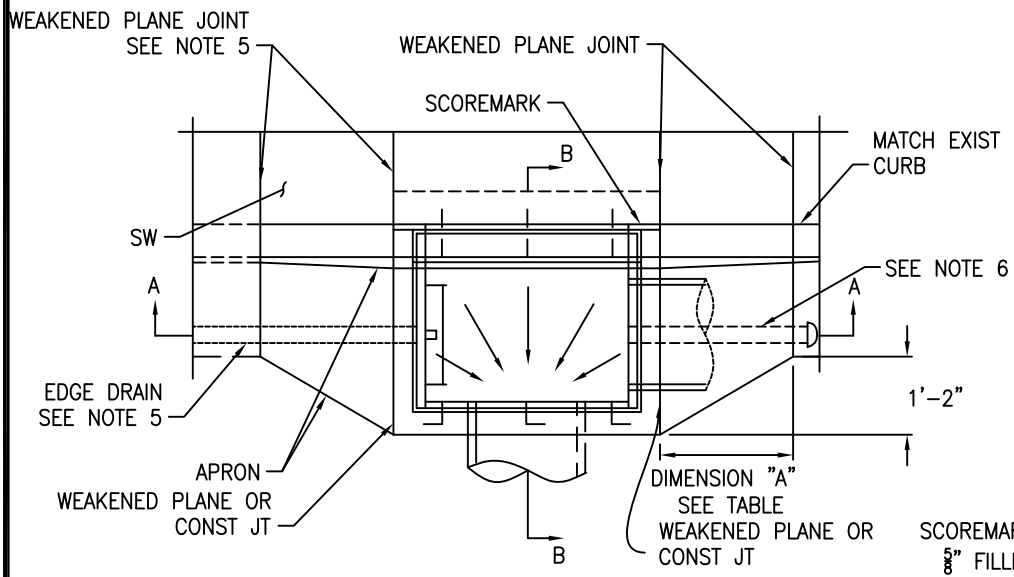

PLAN
NO SCALE
GRATE NOT SHOWN

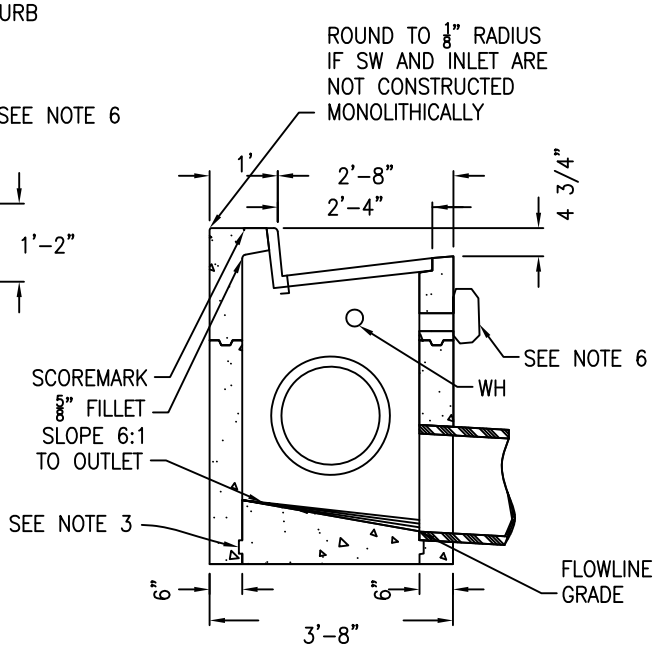

SECTION B-B
NO SCALE

SEE SHEET SD-1.2 FOR NOTES

SCALE: NTS

CITY OF ALBANY, CALIFORNIA	**STANDARD DETAIL**	
APPROVED BY: Ray Chan DATE: DECEMBER 2015	**TYPE "A" INLET**	STD DETAIL No. **SD 1.1**

K:\Standard Specifications and details\Details\CAD Drawings\SD 1 Type A inlet.dwg

NOTES

1. FOR GENERAL NOTES AND DETAILS, SEE STANDARD PLAN SD 9
2. CONSTRUCTION JOINTS ARE OPTIONAL WHERE SHOWN, OTHER LOCATIONS ARE SUBJECT TO THE APPROVAL OF THE PUBLIC WORKS DEPARTMENT. KEY DIMENSIONS – 3/4" x 3".
3. WHEN DIMENSION "H" EXCEED 6'–0", USE A MANHOLE BASE WITH TYPE "A" INLET TOP
4. IF EDGE DRAINS ARE SPECIFIED BY PUBLIC WORKS DEPARTMENT OR SHOWN ON THE PLANS, SEE STANDARD PLAN SD 9 FOR EDGE DRAIN (ED) DETAILS
5. SEE STANDARD PLAN SD 9 FOR WEEPHOLE DRAINAGE DETAILS UNLESS EDGE DRAIN IS SHOWN ON PLANS OR AS SPECIFIRD BY PUBLIC WORKS DEPARTMENT. FOR EDGE DRAIN DETAILS, SEE STANDARD PLAN SD 10.1.
6. SEE STANDARD DETAIL SD 9 FOR WEEPHOLE DETAIL UNLESS EDGE DRAIN IS SHOWN ON PLAN OR SPECIFIED BY PUBLIC WORKS DEPARTMENT. FOR EDGE DRAIN DETAIL SEE SD 10

TABLE

DIMENSION "A" (in)		
UPSTREAM		
CURB GRADE	"A" UPSTREAM	"A" DOWNSTREAM
2% AND LESS	24	24
3%	35	24
4%	48	24
5%	60	24
6%	72	24
7%	84	12
8%	96	12
9%	108	12
10% OR GREATER	120	12

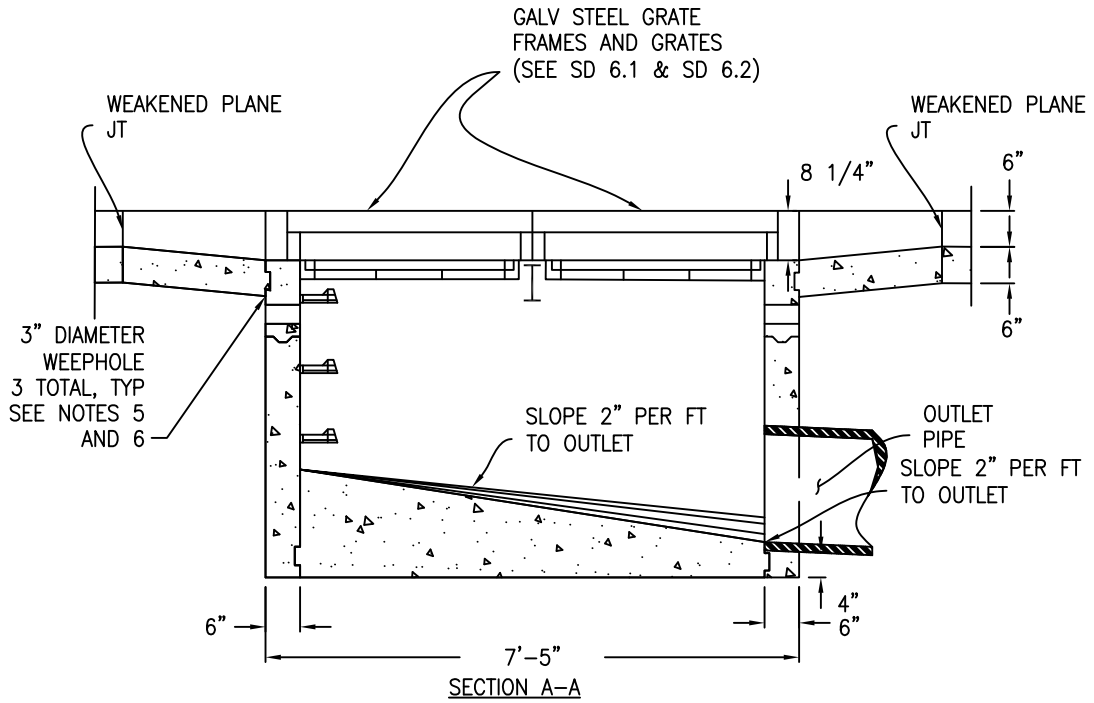

SECTION A-A

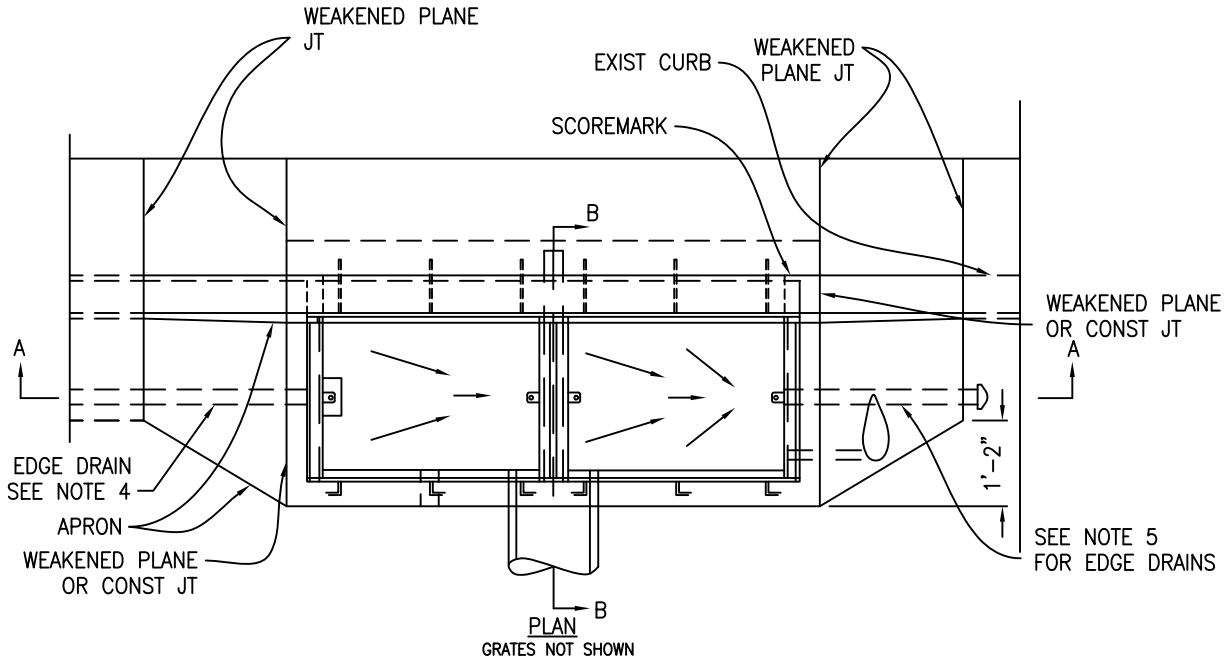

PLAN
GRATES NOT SHOWN

SEE "DETAIL FOR
STEEP CURB SLOPE"

SCALE: NTS

CITY OF ALBANY, CALIFORNIA	STANDARD DETAIL	
APPROVED BY: Ray Chan DATE: DECEMBER 2015	TYPE "B" INLET	STD DETAIL No. SD 2.1

K:\Standard Specifications and details\Details\CAD Drawings\SD 2 Type B inlet.dwg

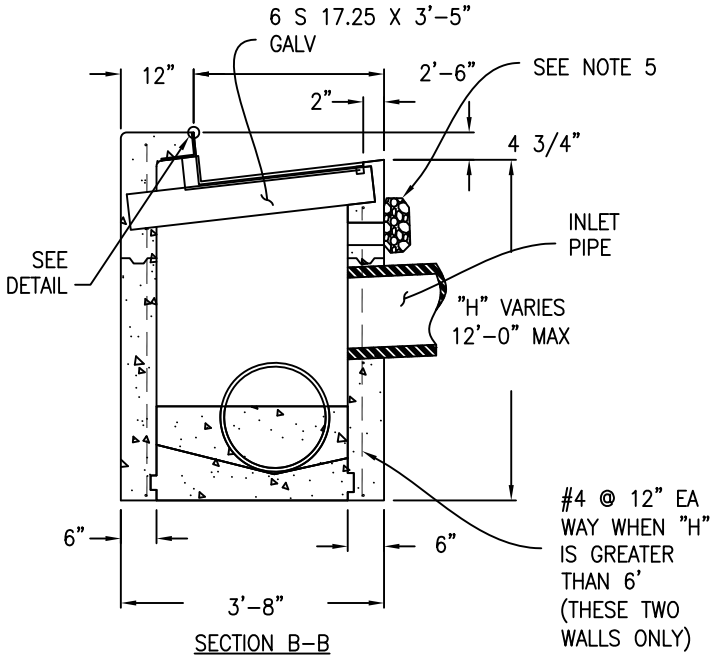

SECTION B-B

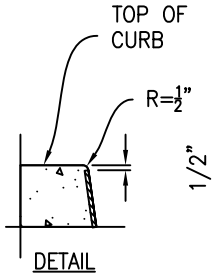

DETAIL

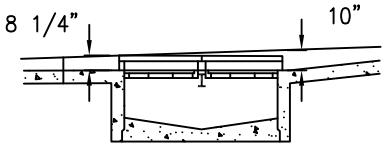

DETAIL FOR STEEP CURB SLOPE

DIMENSIONS "A" (IN)		
UPSTREAM		
CURB GRADE	"A" UPSTREAM	"A" DOWNSTREAM
2% AND LESS	24	24
3%	36	24
4%	48	24
5%	60	24
6%	72	24
7%	84	12
8%	96	12
9%	108	12
10% AND GREATER	120	12

NOTES

1. FOR GENERAL NOTES AND DETAILS, SEE STANDARD PLAN SD 9
2. CONSTRUCTION JOINTS ARE OPTIONAL WHERE SHOWN, OTHER LOCATIONS ARE SUBJECT TO THE APPROVAL OF THE PUBLIC WORKS DEPARTMENT. KEY DIMENSIONS – 3/4" x 3".
3. WHEN DIMENSION "H" EXCEED 12'-0", USE A MANHOLE BASE WITH TYPE "B" INLET TOP
4. IF EDGE DRAINS ARE SPECIFIED BY PUBLIC WORKS DEPARTMENT OR SHOWN ON THE PLANS, SEE STANDARD PLAN SD 10 FOR EDGE DRAIN (ED) DETAILS
5. SEE STANDARD PLAN SD 9 FOR WEEPHOLE DRAINAGE DETAILS UNLESS EDGE DRAIN IS SHOWN ON PLANS OR AS SPECIFIRD BY PUBLIC WORKS DEPARTMENT. FOR EDGE DRAIN DETAILS, SEE STANDARD PLAN SD 10

CITY OF ALBANY, CALIFORNIA	STANDARD DETAIL	
APPROVED BY: Ray Chan DATE: DECEMBER 2015	TYPE "B" INLET - NOTES	STD DETAIL No. SD 2.2

K:\Standard Specifications and details\Details\CAD Drawings\SD 2 Type B inlet.dwg

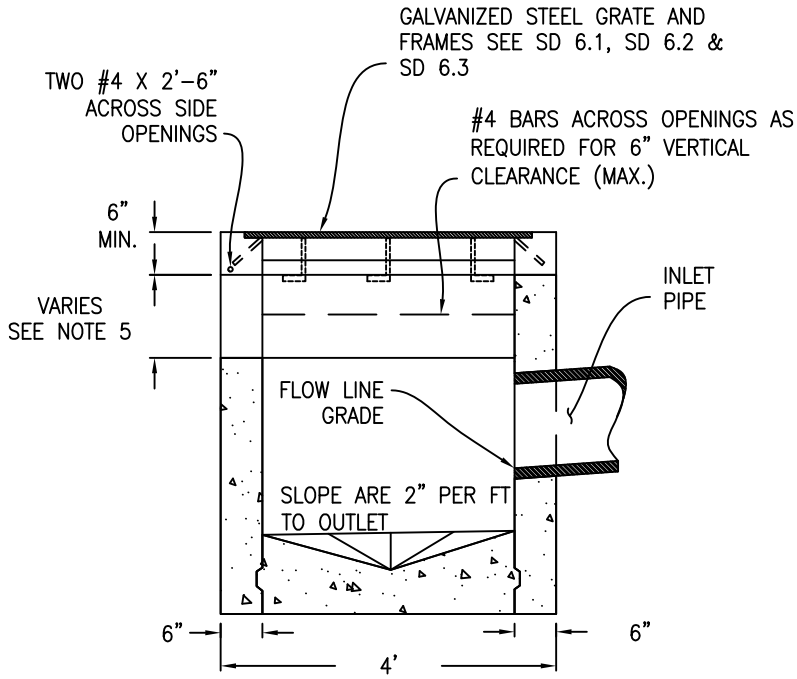

SECTION A–A

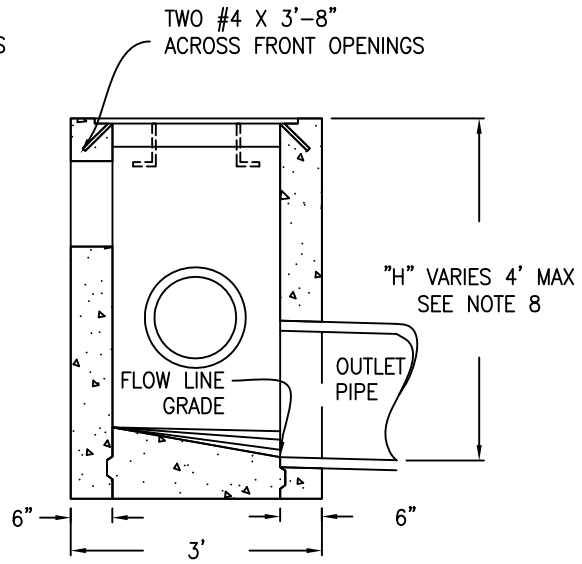

SECTION B–B

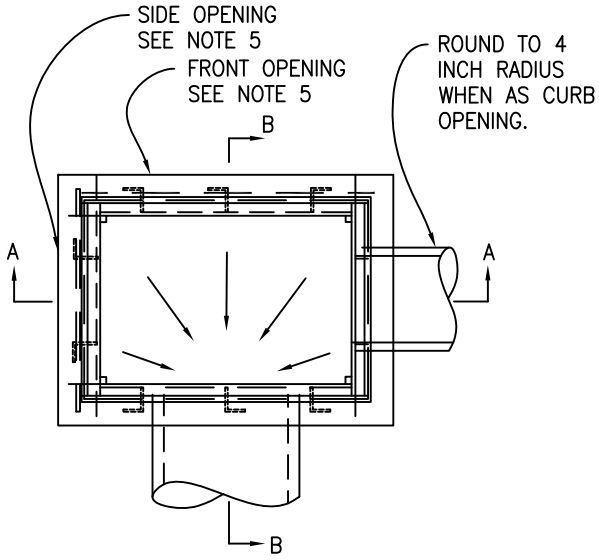

PLAN
GRATE NOT SHOWN

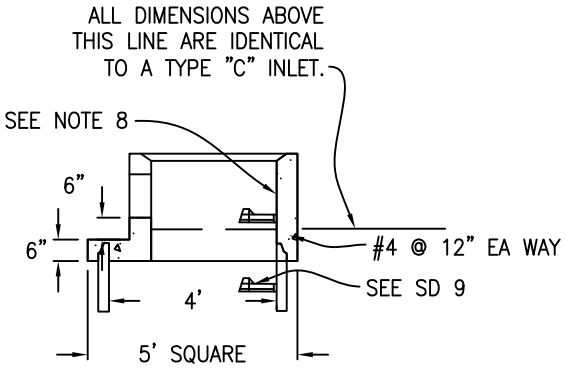

TYPE "C" OPENING ON PRECAST MANHOLE BARREL
REFER TO STANDARD PLAN SD 7

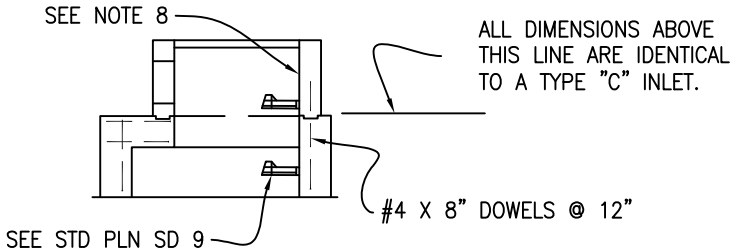

TYPE "C" OPENING ON MANHOLE BASEGRATE
REFER TO STANDARD PLAN SD 7

SCALE: NTS

CITY OF ALBANY, CALIFORNIA		**STANDARD DETAIL**
APPROVED BY: Ray Chan DATE: DECEMBER 2015	**TYPE "C" INLET**	STD DETAIL No. **SD 3.1**

K:\Standard Specifications and details\Details\CAD Drawings\SD 3 Type C Inlet.dwg

NOTES:

1. CONSTRUCTION JOINTS ARE OPTIONAL WHERE SHOWN. OTHER LOCATIONS ARE SUBJECT TO APPROVAL OF THE PUBLIC WORKS DEPARTMENT. KEY DIMENSIONS $\frac{3}{4}$" x 2 $\frac{1}{2}$"
2. CLEARANCE SHALL BE 2" FOR ALL REINFORCING STEEL.
3. FOR INLET GENERAL NOTES AND DETAILS, SEE STANDARD PLAN SD 9
4. LOCATION, FLOWLINE ELEVATION AND SIZE OF OPENING TO BE AS SHOWN ON PLANS, OR AS DIRECTED BY THE PUBLIC WORKS DEPARTMENT.
5. ALL INLETS SHALL BE CONSTRUCTED WITH GRATES. INLETS INSTALLED IN A PEDESTRIAN AREA SHALL BE TYPE "D".
6. PRECAST INLET CONFORMING TO SANTA ROSA CAST PRODUCT CO. DRAWING NO. TYPE C OR EQUIVALENT, CAN BE SUBSTITUTED FOR CAST IN-PLACE INLET UNLESS OTHERWISE SPECIFIED IN PROJECT SPECIAL PROVISIONS.
7. MAXIMUM DEPTH FOR TYPE "C" INLET SHALL BE 4'. FOR DEPTHS GREATER THAN 4' USE A MANHOLE BASE WITH A TYPE "C" TOP. THE TYPE "C" INSIDE WALL WITH STEPS SHALL BE FLUSHWITH MANHOLE BASE INSIDE WALL.
8. DETAILS APPLY TO ALL METAL, PLASTIC AND CONCRETE PIPE.

SCALE: NTS

CITY OF ALBANY, CALIFORNIA	STANDARD DETAIL	
APPROVED BY: Ray Chan DATE: DECEMBER 2015	TYPE "C" INLET - NOTES	STD DETAIL No. SD 3.2

K:\Standard Specifications and details\Details\CAD Drawings\SD 3 Type C Inlet.dwg

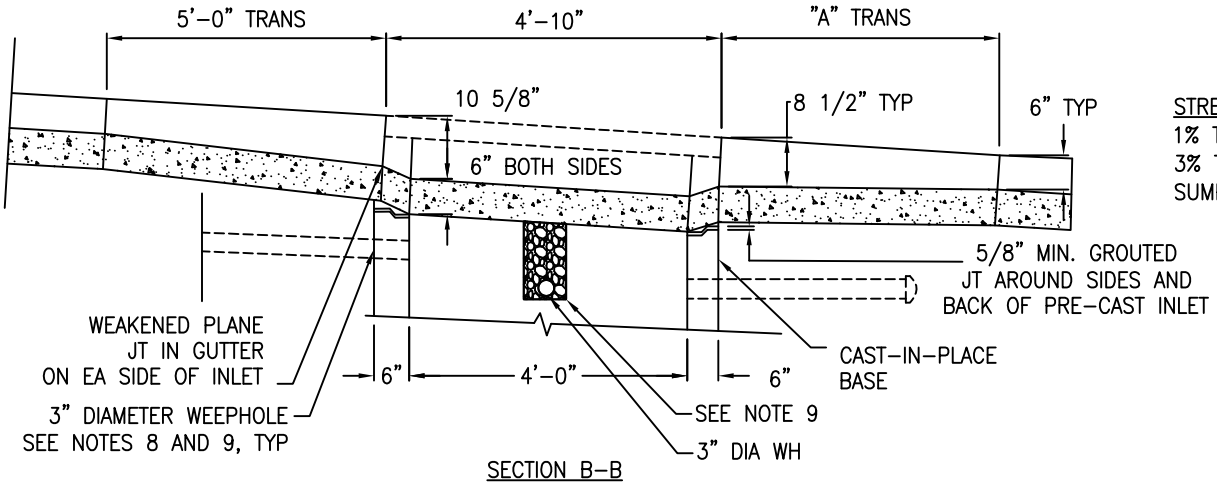

STREET GRADE	"A"
1% TO 3%	4'-0"
3% TO 6%	2'-0"
SUMP	5'-0"

SECTION B-B

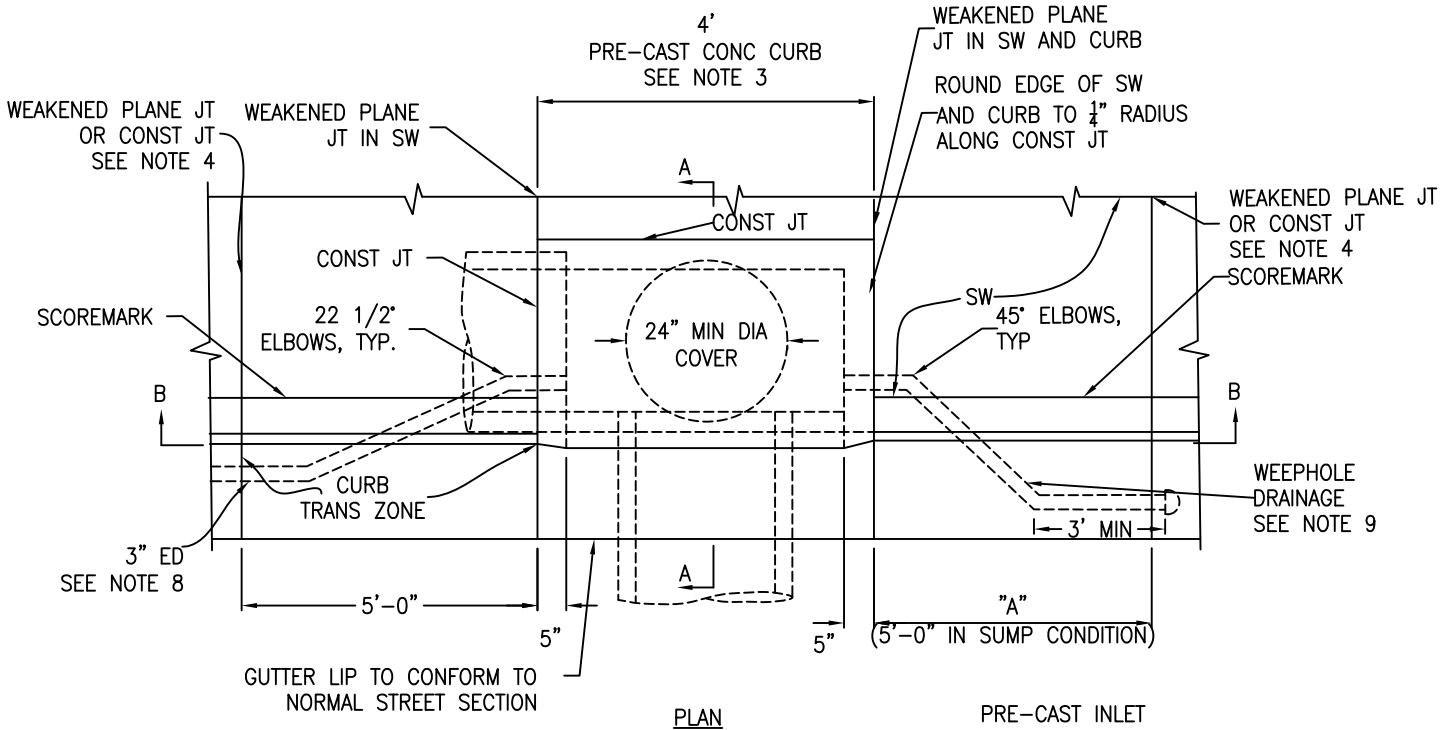

PLAN

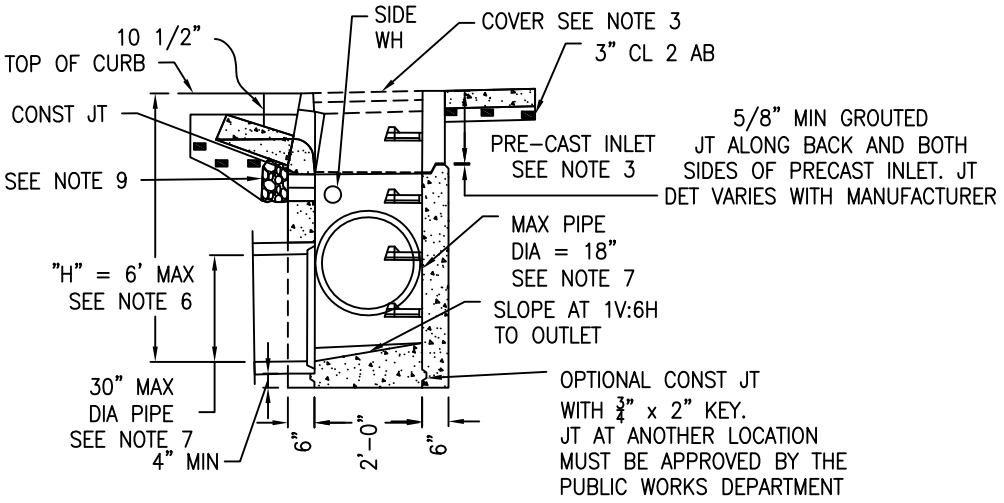

SECTION A-A

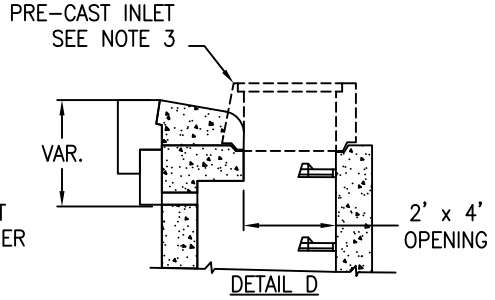

DETAIL D
PRE-CAST INLET ON TYPE II MANHOLE SEE NOTE 6

SCALE: NTS

CITY OF ALBANY, CALIFORNIA		**STANDARD DETAIL**
APPROVED BY: Ray Chan DATE: DECEMBER 2015	**TYPE "D" INLET**	STD DETAIL No. **SD 4.1**

K:\Standard Specifications and details\Details\CAD Drawings\SD 4 Type D Inlet.dwg

NOTES:

1. FOR INLET GENERAL NOTES AND DETAILS, SEE STANDARD PLAN SD 9.
2. TYPE D INLET NOT PERMITTED WHEN STREET GRADE EXCEEDS 6%. IF GRADE EXCEEDS 6% USE TYPE E INLET
3. PRECAST CONCRETE CURB INLET SHALL BE CENRAL PRECAST MODEL 4 A OR CHRISTY CONCRETE PRODUCTS MODEL U-37, OR EQUIVALENT, AS APPROVED BY THE PUBLIC WORKS DEPARTMENT. SEE MANUFACTURER'S CATALOG FOR DETAILS OF INLET AND CIRCULAR COVER NOT SHOWN ON THIS PLAN. COVERS SHALL HAVE A PICK HOLE FOR ACCESS.
4. WHEN CURB AND SIDEWALK ARE EXTRUDED, CONSTRUCTION JOINTS SHALL BE PROVIDED AT LOCATION AS SHOWN IN PLAN VIEW.
5. CURB AND SIDEWALK SHALL BE CONSTRUCTED MONOLITHICALLY.
6. IF "H" EXCEEDS 6'-0", CONSTRUCT PRECAST INLET ON A TYPE II MANHOLE BASE AS SHOWN IN DETAIL "D" ON THIS PLAN. SEE STANDARD PLANS SD 7 AND SD 8 FOR MANHOLE AND TOP SLAB DETAILS.
7. A PIPE SHALL NOT ENTER THE INLET THROUGH A CORNER. IF PIPE EXCEEDS
8. IF EDGE DRAINS ARE SPECIFIEF BY PUBLIC WORKS DEPARTMENT OR SHOWN ON THE PLANS, SEE STANDARD PLAN SD 10 FOR EDGE DRAIN (ED) DETAILS.
9. SEE STANDARD PLAN SD 9 FOR WEEPHOLE DRAINAGE DETAILS UNLESS EDGE DRAIN IS SHOWN ON PLANS OR AS SPECIFIED BY PUBLIC WORKS DEPARTMENT. FOR EDGE DRAIN DETAILS, SEE STANDARD PLAN SD 10.

SCALE: NTS

CITY OF ALBANY, CALIFORNIA	STANDARD DETAIL	
APPROVED BY: Ray Chan DATE: DECEMBER 2015	TYPE "D" INLET - NOTES	STD DETAIL No. SD 4.2

K:\Standard Specifications and details\Details\CAD Drawings\SD 4 Type D Inlet.dwg

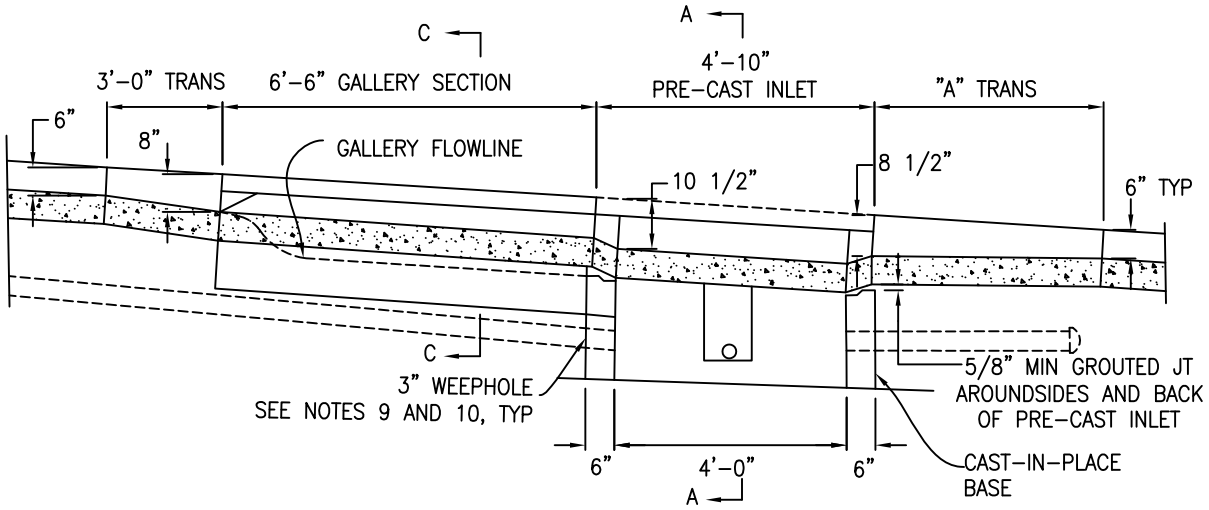

SECTION B-B

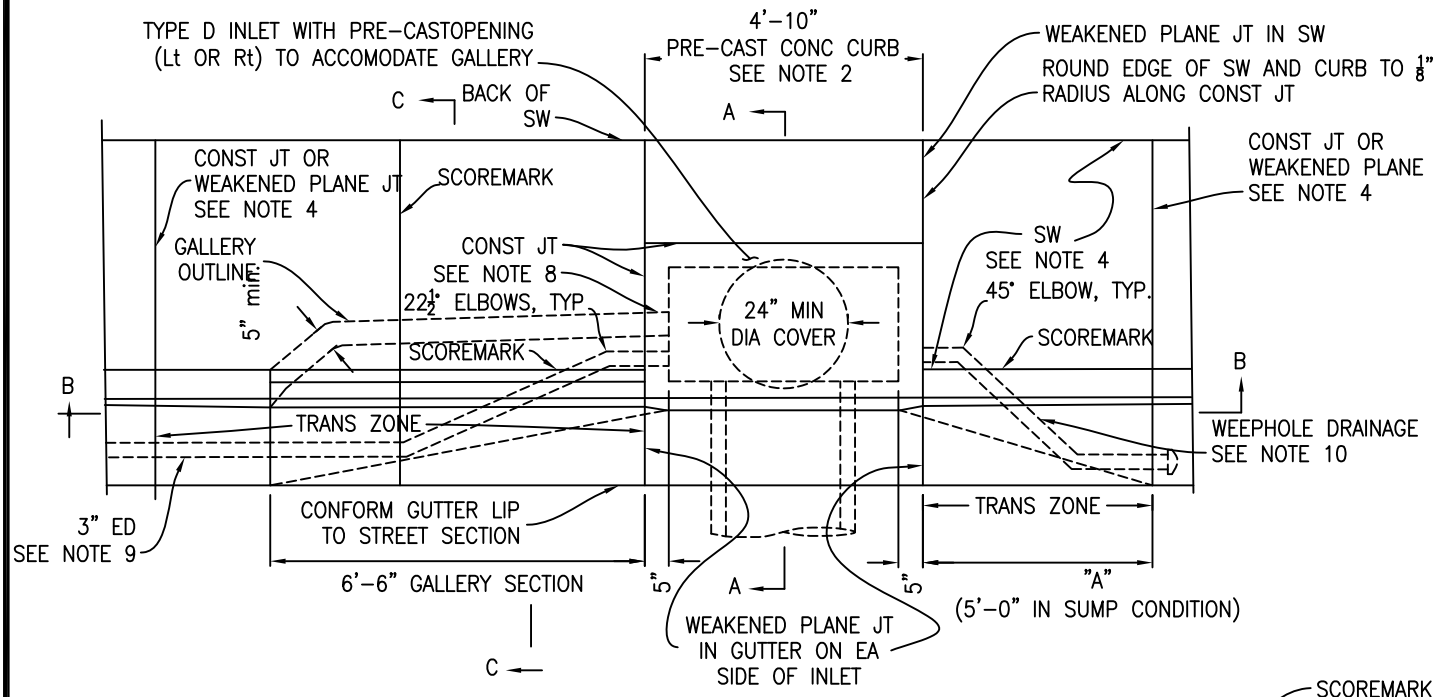

PLAN

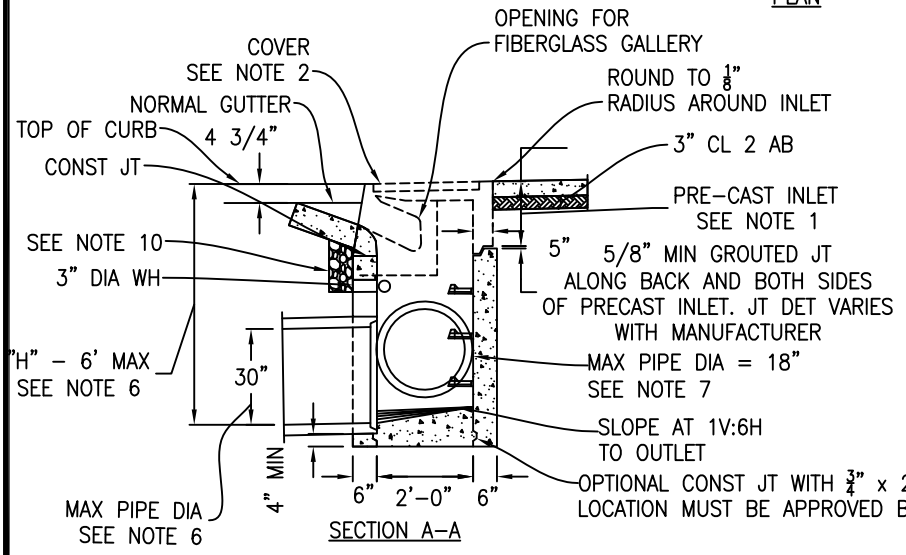

SECTION A-A

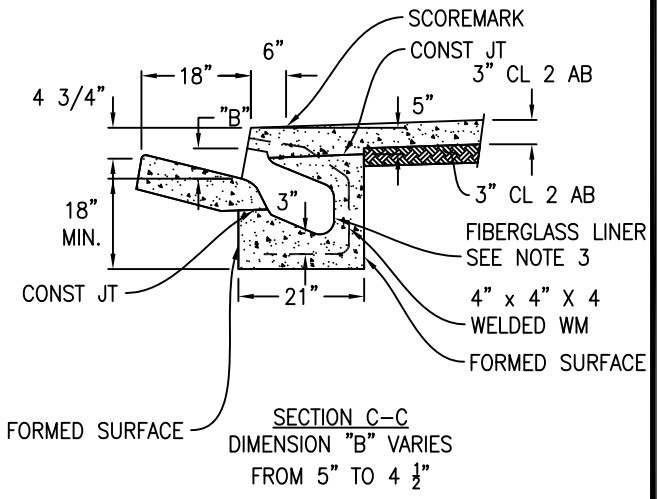

SECTION C-C
DIMENSION "B" VARIES
FROM 5" TO 4 1/2"

SCALE: NTS

CITY OF ALBANY, CALIFORNIA		**STANDARD DETAIL**
APPROVED BY: *Ray Chan*	**TYPE "E" INLET**	STD DETAIL No.
DATE: DECEMBER 2015		**SD 5.1**

K:\Standard Specifications and details\Details\CAD Drawings\SD 5 Type E Inlet.dwg

NOTES:

1. FOR INLET GENERAL NOTES AND DETAILS, SEE STANDARD PLAN SD 9.
2. THE PRE-CAST CONCRETE CURB INLET SHALL BE CENTRAL PRECAST MODEL MODEL 4A OR CHRISTY CONCRETE PROD. MODEL U-37, OR EQUIVALENT, AS APPROVED BY THE PUBLIC WORKS DEPARTMENT. SEE MANUFACTURER'S CATALOG FOR DETAILS OF INLET AND CIRCULAR COVER NOT SHOWN ON THIS PLAN. COVERS SHALL HAVE A HOLE FOR ACCESS.
3. FIBERGLASS LINER FOR GALLERY SHALL BE CENTRAL PRECAST PELICAN GALLERY MODEL 6Y, OR APPROVED EQUIVALENT.
4. WHEN CURB AND SIDEWALK ARE EXTRUDED, CONSTRUCTION JOINTS SHALL PROVIDED AT LOCATION AS SHOWN IN PLAN VIEW.
5. CURB AND GALLERY SECTION AND SIDEWALK SHALL BE CONSTRUCTED MONOLITHICALLY.
6. IF "H" EXCEEDS 6'-0", CONSTRUCT PRE-CAST INLET ON A TYPE II MANHOLE BASE AS SHOWN IN DETAIL D ON STANDARD PLAN SD 4, TYPE D INLET. SEE STANDARD PLANS SD 7 AND SD 8 FOR MANHOLE BASE AND TOP SLAB DETAILS.
7. A PIPE SHALL NOT ENTER THE INLET THROUGH A CORNER. IF PIPE EXCEEDS MAXIMUM DIAMETER ALLOWED OR THE SKEW ANGLE PREVENTS THE PIPE OPENING FROM BEING MADE IN A SINGLE WALL, CONSTRUCT A TYPE II MANHOLE BASE TO ACCEPT STORM DRAIN LINES
8. BLOCK OUT PORTION OF CAST-IN-PLACE BASE AS REQUIRED TO PERMIT CONSTRUCTION OF GALLERY TO INSIDE FACE OF BASE, AND FILL IN WHEN GALLERY CONCRETE IS PLACED.
9. IF EDGE DRAINS ARE SPECIFIED BY PUBLIC WORKS DEPARTMENT OR SHOWN ON THE PLANS, SEE STANDARD PLAN SD 10 FOR EDGE DRAIN (ED) DETAILS.
10. SEE STANDARD PLAN SD 9 FOR WEEPHOLE DRAINAGE DETAILS UNLESS EDGE DRAIN IS SHOWN ON PLANS OR AS SPECIFIED BY PUBLIC WORKS DEPARTMENT. FOR EDGE DRAIN DETAILS, SEE STANDARD PLAN SD 10

SCALE: NTS

CITY OF ALBANY, CALIFORNIA	STANDARD DETAIL	
APPROVED BY: Ray Chan DATE: DECEMBER 2015	TYPE "E" INLET - NOTES	STD DETAIL No. SD 5.2

K:\Standard Specifications and details\Details\CAD Drawings\SD 5 Type E Inlet.dwg

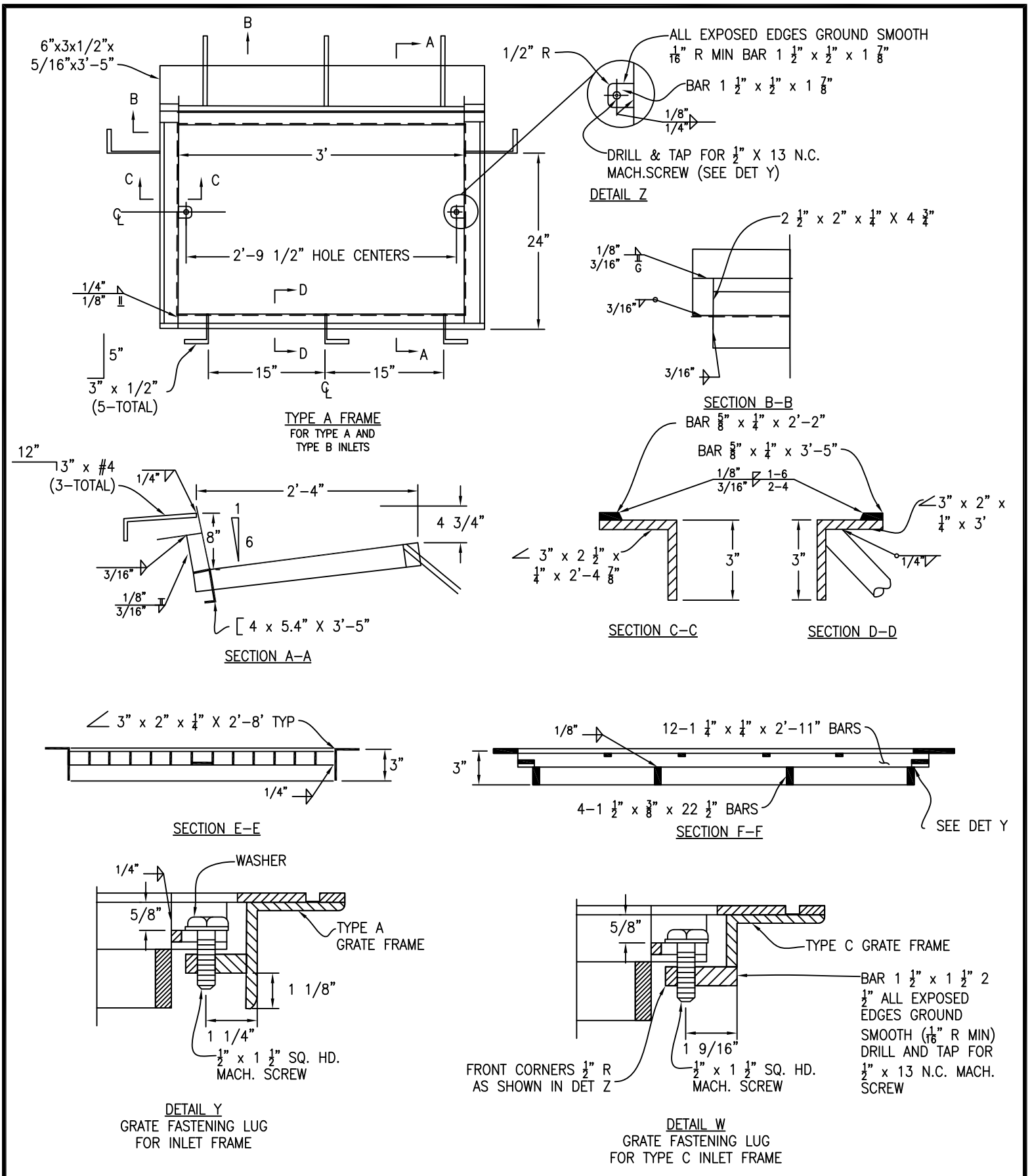

SCALE: NTS

CITY OF ALBANY, CALIFORNIA		STANDARD DETAIL
APPROVED BY: Ray Chan DATE: DECEMBER 2015	INLET FRAME AND GRATE FOR TYPE "A", "B" & "C"	STD DETAIL No. SD 6.1

K:\Standard Specifications and details\Details\CAD Drawings\SD 6 Inlet Frame and Grate.dwg

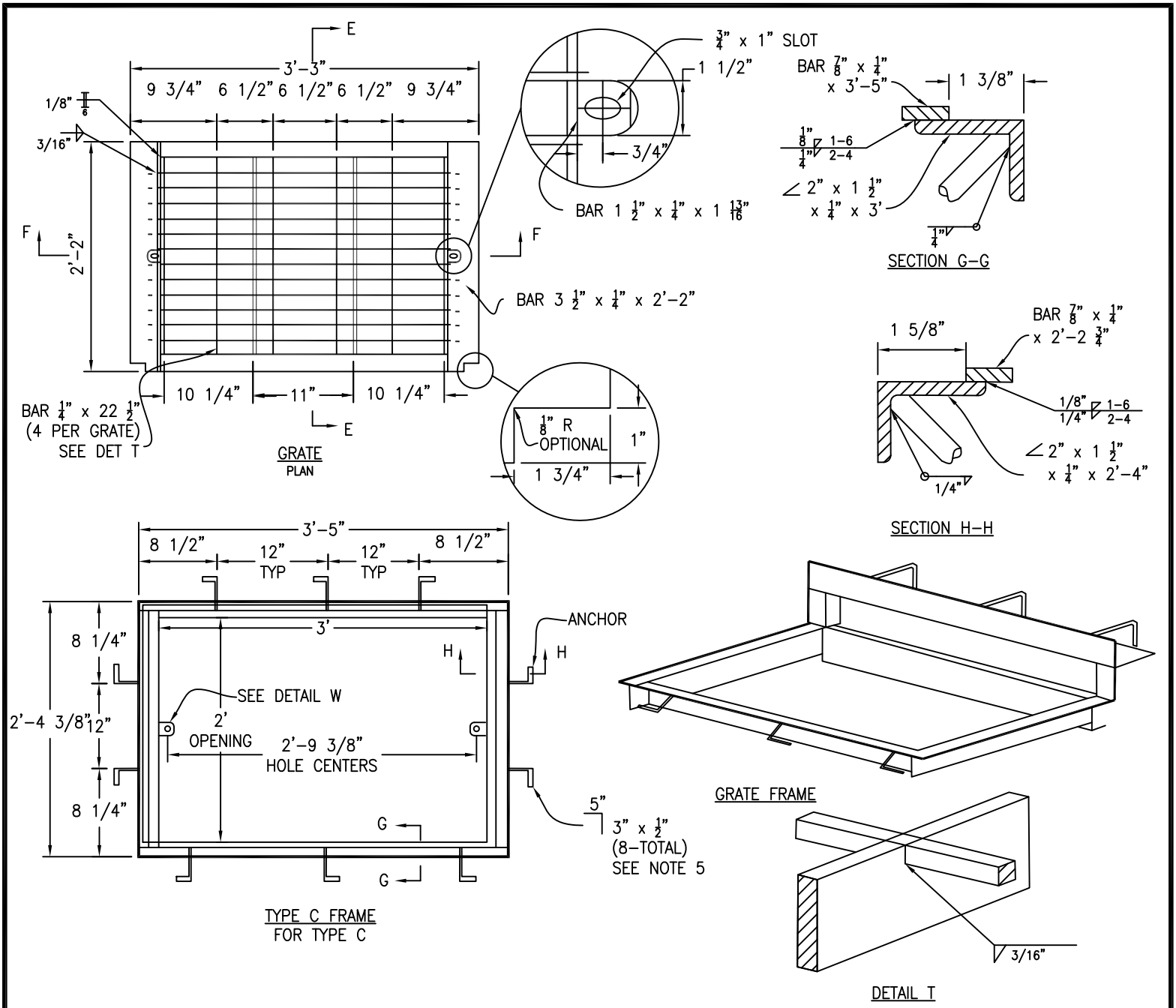

NOTES:

1. ALL MATERIALS, FABRICATION, GALVANIZING, AND SURFACE TREATMENT SHALL BE IN ACCORDANCE WITH SECTION 75 AND 95 OF THE CALIFORNIA DEPARTMENT OF TRANSPORTATION'S STANDARD SPECIFICATIONS.
2. FRAMES AND COVERS SHALL FIT TOGETHER WITHOUT ROCKING.
3. FABRICATOR SHALL SUPPLY FASTENING SCREWS WITH FRAMES.
4. WEIGHTS: TYPE A GRATE FRAME 88 LBS., GRATE 86 LBS..
5. 1/2" x 5 1/4" NELSON-TYPE STUDS MAY BE USED IN LIEU OF 1/2" DIA x 5" 3" ANCHORS.
6. TYPE A, B AND C INLETS HAVE BEEN REPLACED WITH TYPE G, H AND J INLETS RESPECTIVELY. THESE DETAILS ARE TO BE USED FOR REPAIR MAINTENANCE OF ESISTING INLETS, NO NEW CONSTRUCTION.

SCALE: NTS

CITY OF ALBANY, CALIFORNIA	STANDARD DETAIL	
APPROVED BY: Ray Chan DATE: DECEMBER 2015	INLET FRAME AND GRATE FOR TYPE "A", "B" & "C"	STD DETAIL No. SD 6.2

K:\Standard Specifications and details\Details\CAD Drawings\SD 6 Inlet Frame and Grate.dwg

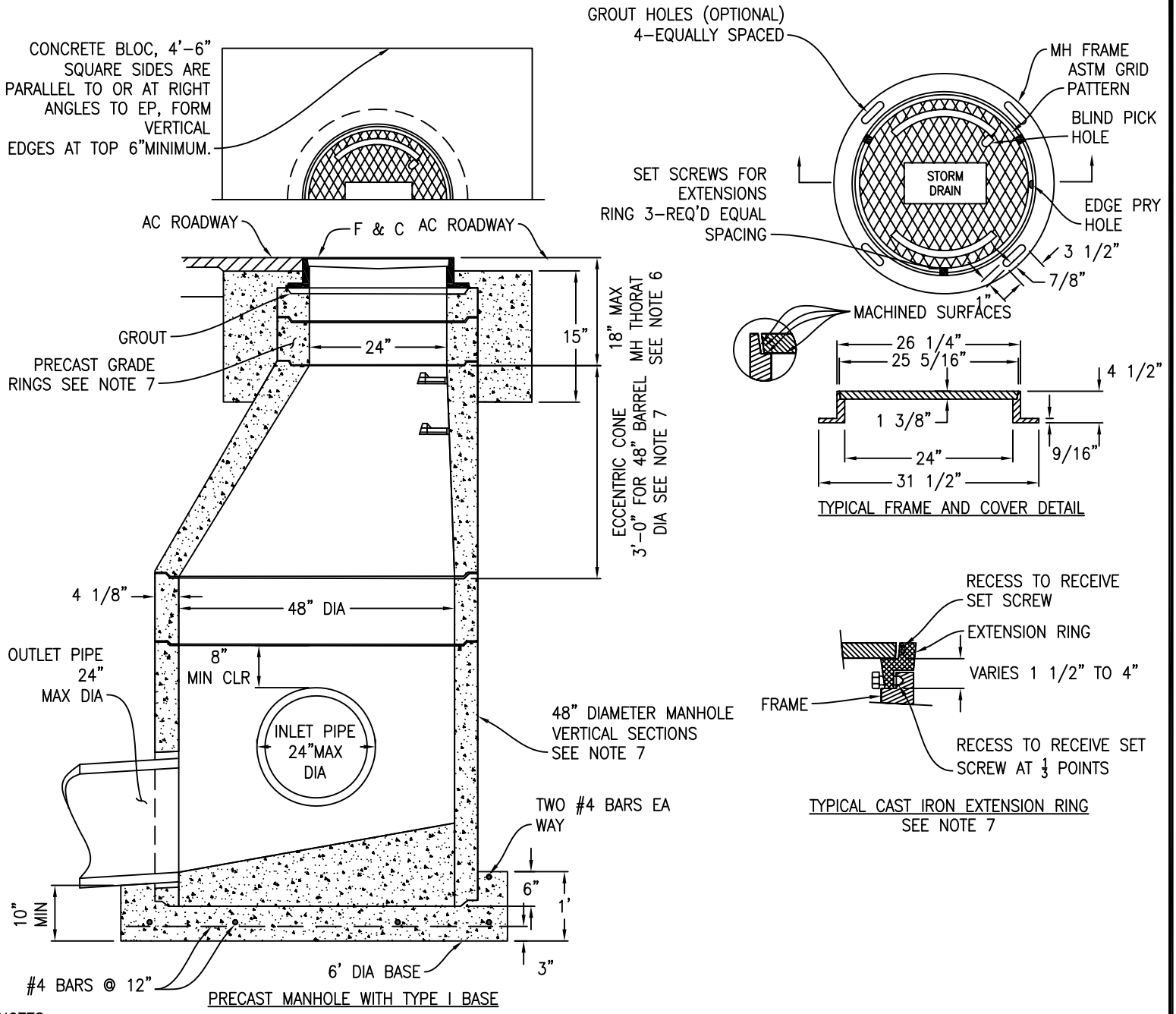

NOTES:

1. FOR INLET GENERAL NOTES AND DETAILS, SEE STANDARD PLAN SD 9.
2. ALL CONCRETE JOINTS SHALL BE CLEANED WETTED, AND MORTARED PRIOR TO SETTING NEXT SECTION. JOINTS SHALL THEN BE PATCHED, TROWELED, AND BRUSHED SMOOTH.
3. FRAME AND EXTENSION RINGS MUST BE SECURED BY CONCRETE BLOCK, UNLESS APPROVED OTHERWISE BY THE PUBLIC WORKS DEPARTMENT.
4. MANHOLE COVER FRAME SHALL BE ADJUSTED TO CONFORM TO GRADE AND CROSS SLOPE OF PAVEMENT
5. MANHOLE FRAME AND COVER SHALL BE PHOENIX IRON (OAKLAND) MODEL P- 1090 OR SOUTH BAY FOUNDRY No. 1900 CPH OR APPROVED EQUIVALENT.
6. USE OF PRECAST GRADE RINGS ARE LIMITED BY 18" MAXIMUM MANHOLE THROAT LENGTH. CAST IRON EXTENSION RINGS ARE ALLOWED FOR CONFORMS TO PAVEMENT OVERLAYS ONLY.
7. THE PRECAST COMPONENTS SHALL CONFORM TO THE CENTRAL PRECAST (US CONCRETE PRECAST GROUP NORTHERN CALIFORNIA) DRAWING Nos. 20-48C,2048V AND 20-48 EC, OR EQUIVALENT.

SCALE: NTS

CITY OF ALBANY, CALIFORNIA	STANDARD DETAIL	
APPROVED BY: Ray Chan DATE: DECEMBER 2015	PRECAST MANHOLE, TYPE I BASE, FRAME & COVER	STD DETAIL No. SD 7

K:\Standard Specifications and details\Details\CAD Drawings\SD 7 Precast Manhole , Type I Base, Frame and Cover.dwg

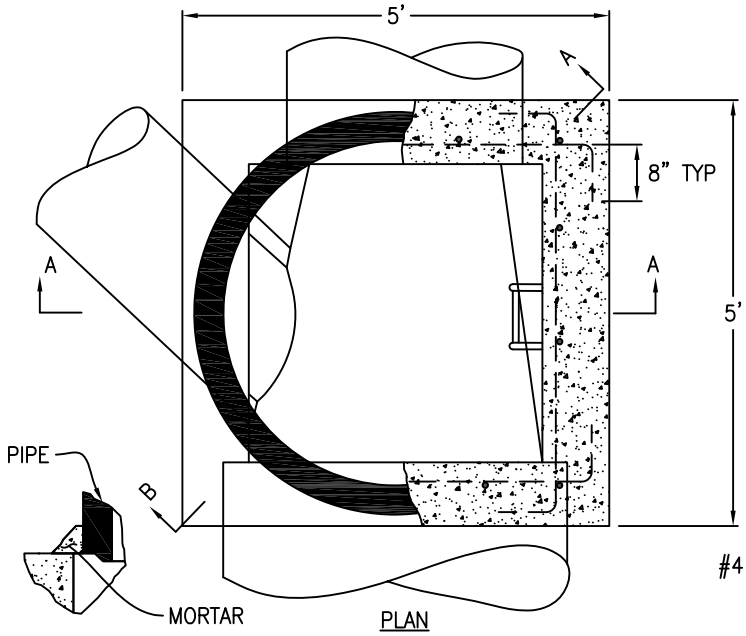

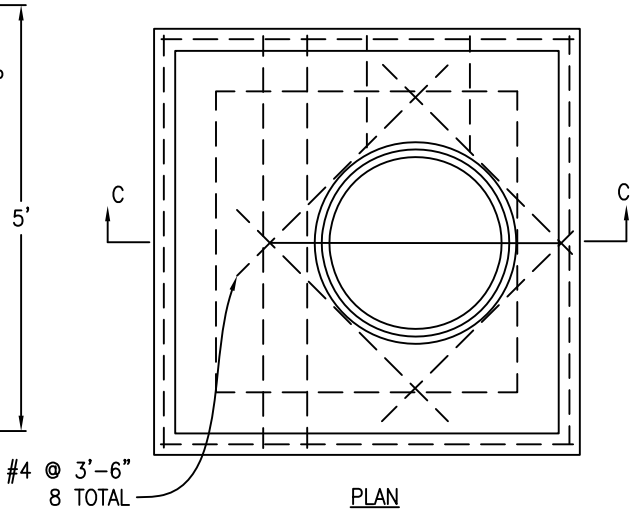

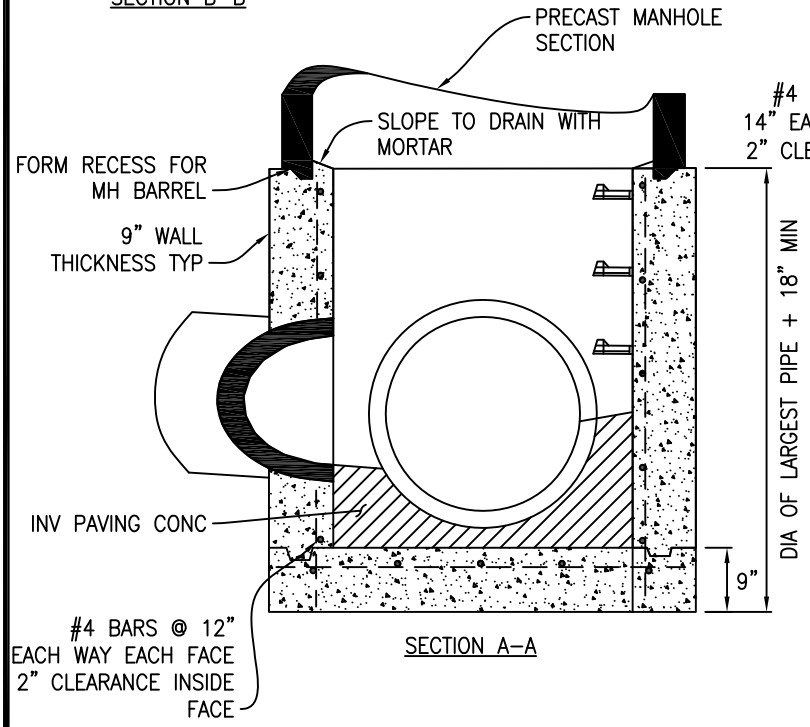

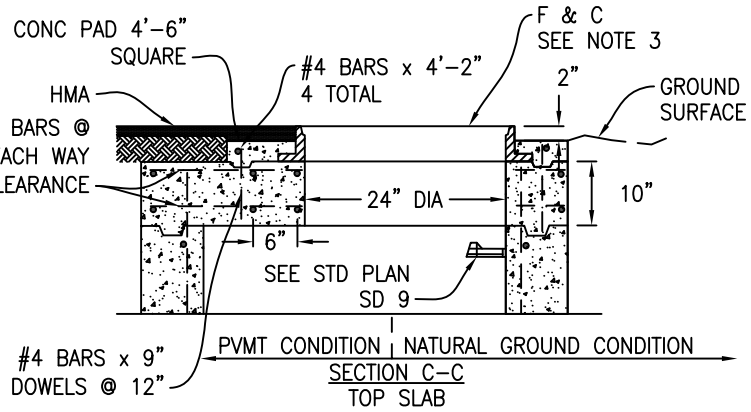

USE TOP SLAB:

1. WHEN THERE IS INSUFFICIENT DEPTH BETWEEN THE TOP OF THE MANHOLE BASE FINISH GRADE FOR PRECAST MANHOLE ECCENTRIC CONE SECTION PER STANDARD PLAN SD 7

NOTES

1. FOR MANHOLE GENERAL NOTES AND DETAILS, SEE STANDARD PLAN SD 9
2. CONSTRUCTION JOINTS ARE OPTIONAL WHERE SHOWN. OTHER LOCATIONS ARE SUBJECT TO APPROVAL BY THE PUBLIC WORKS DEPARTMENT. KEY DIMENSIONS ARE 1 $\frac{1}{2}$" x 3"
3. FOR DETAILS OF MANHOLE FRAME AND COVER, SEE STANDARD PLAN SD 7. ORIENT FRAME DIRECTLY ABOVE STEPS.

SCALE: NTS

CITY OF ALBANY, CALIFORNIA	STANDARD DETAIL	
APPROVED BY: Ray Chan DATE: DECEMBER 2015	TYPE II MANHOLE BASE	STD DETAIL No. SD 8

K:\Standard Specifications and details\Details\CAD Drawings\SD 8 Type II Manhole Base.dwg

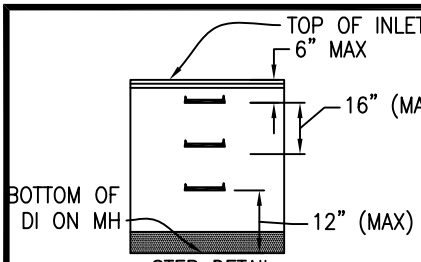

STEP DETAIL
SEE NOTE 2

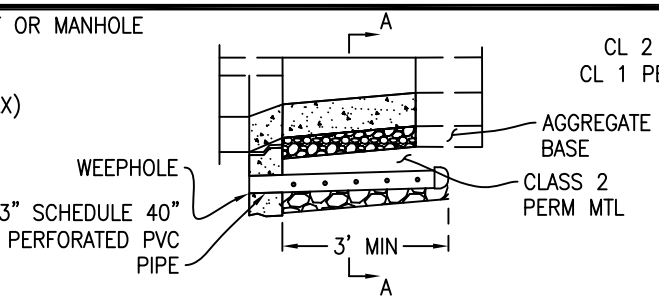

STANDARD FRONTSIDE WEEPHOLE DETAIL
SEE NOTE 3

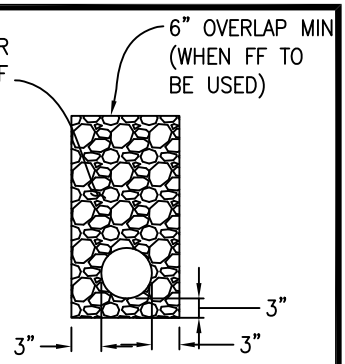

EDGE DRAIN TRENCH DETAIL

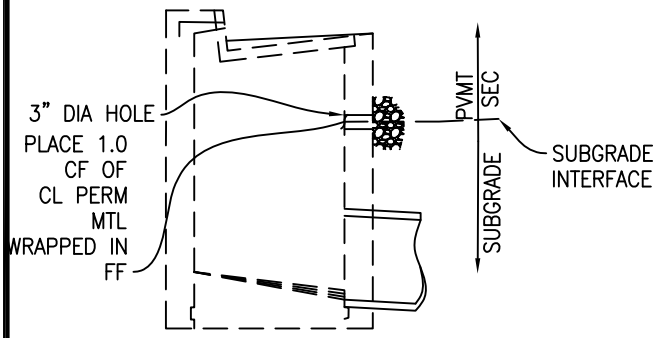

STANDARD FRONTSIDE WEEPHOLE DETAIL
SEE NOTE 3

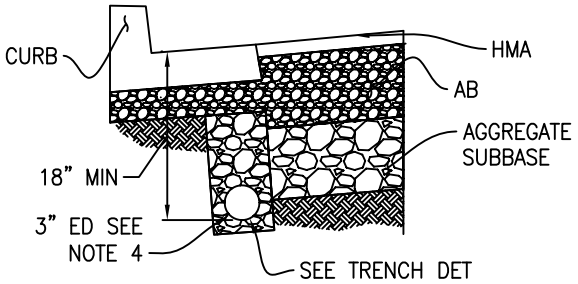

SECTION A–A

NOTES

1. ALL INLETS SHALL HAVE THE CITY APPROVED "ANTI–POLLUTION" PLASTIC MARKER ATTACHED TO THE INLET AS DIRECTED BY THE INSPECTOR OR RESIDENT ENGINEER. THE MARKER SHALL BE APPLIED FOLLOWING MANUFACTURER'S RECOMMENDATIONS. PCC SURFACES SHALL BE MECHANICALLY CLEANED JUST PRIOR TO ATTACHING THE MARKER. THE MARKER AND ADHESIVE MAY BE FURNISHED BY THE PUBLIC WORKS DEPARTMENT, CHECK YOUR PERMIT CONDITIONS OR CONTRACT SPECIAL PROVISIONS.

2. STEPS SHALL BE REINFORCED POLYPROPYLENE PLASTIC, M.A. INDUSTRIES, INC. No, PS2–PF OR EQIVALENT. STEPS TO BE CAST IN PLACE OR PRESS FITTED INTO HOLES PER MANUFACTURER. INSTALL STEPS WITH LOWEST RUNG 12" MAXIMUM ABOVE THE FLOOR AND HIGHEST RUNG NOT MORE THAN 6" BELOW TOP INLET. THE SPACING BETWEEN STEPS SHALL NOT EXCEED 16"AND SHALL BE UNIFORM THROUGHOUT THE LENGTH OF THE WALL. NO STEPS REQUIRED WHERE DISTANCE FROM FLOOR OF INLET TO TOP OF GRATE IS 4' OR LESS. SEE "STEP DETAIL".

3. WEEPHOLE ELEVATION VARIES DEPENDING ON THE DEPTH OF THE ADJOINING PAVEMENT SECTION. IT SHALL BE AT, OR SLIGHTLY BELOW, THE PAVEMENT SECTION SUBGRADE ELEVATION WITH A MINIMUM DEPTH OF 18" BELOW THE CURB INLET GRATE ELEVATION. THE SIDE WEEPHOLE DETAIL SHALL BE USED AT ALL "SUMP" LOCATION. EDGE DRAIN STANDARD PLAN (SD 10), OR SIDE WEEP WEEPHOLE DRAINS DETAIL AT OTHER LOCATIONS MAY BE REQUIRED AS SHOWN ON THE CONSTRUCTION PLANS OR BY THE PUBLIC WORKS DEPARTMENT. WHERE THE SIDE WEEPHOLE DETAIL OR EDGE DRAINS ARE NOT REQUIRED, THESE WEEPHOLES SHALL CONFORM TO THE FRONT FACE WEEPHOLE DETAILS SHOWN ON THIS PLAN.

4. 3" EDGE DRAIN PER STANDARD PLAN SD 10 WHEN SHOWN ON THE PLANS OR SPECFIED BY THE PUBLIC WORKS DEPARTMENT.

5. CONCRETE SHALL CONFORM TO SECTION 90, "CONCRETE", OF CALIFORNIA DEPARTMENT OF TRANSPORTATION'S STANDARD SPECIFICATIONS AND THE FOLLOWING.
   A. CONSTRUCTION JOINTS SHOWN ON STANDARD PLANS ARE PERMITTED WHEN TOP PORTION OF INLET IS TO BE CONSTRUCTED MONOLITHICALLY WITH CURB AND SIDEWALK. KEY DIMENSION – $\frac{3}{4}$" x 3"
   B. CONCRETE CONSTRUCTION JOINT SHALL BE LOCATED 12" TO 18" ELOW TOP OF CURB ELEVATION.
   C. CONCRETE ABOVE CONSTRUCTION JOINT SHALL CONTAIN A MINIMUM OF 505 LBS OF CEMENTIOUS MATERIAL PER CUBIC YARD, 1" MAXIMUM AGGREGATE GRADING.
   D. CONCRETE BELOW CONSTRUCTION JOINT SHALL CONTAIN A MINIMUM OF 590 LBS OF CEMENTIOUS MATERIALS PER CUBIC YARD, 1" MAXIMUM AGGREGATE GRADING.
   E. WHEN INLET IS CONSTRUCTED AS A SINGLE UNIT CONCRETE SHALL COMPLY WITH ITEM D, DESCRIBED ABOVE.

6. UNLESS OTHERWISE NOTED ON STANDARD PLANS ALL CONCRETE SHALL CONTAIN NOT LESS THAN 590 LBS OF CEMENTIOUS MATERIAL PER CUBIC YARD, 1" MAXIMUM GRADING IN CONFORMANCE WITH SECTION 90, "CONCRETE" OF CALIFORNIA DEPARTMENT OF TRANSPORTATION'S STANDARD SPECIFICATIONS. ONVERT PAVING CONCRETE SHALL CONTAIN NOT LESS THAN 505 LBS PER CUBIC YARD OF CEMENTIOUS MATERIAL, 1" MAXIMUM GRADING, IN CONFORMANCE WITH SAID STANARD SPECIFICATIONS.

SCALE: NTS

CITY OF ALBANY, CALIFORNIA	STANDARD DETAIL	
APPROVED BY: Ray Chan DATE: DECEMBER 2015	STANDARD INLET/MANHOLE PLAN GENERAL NOTES	STD DETAIL No. SD 9

K:\Standard Specifications and details\Details\CAD Drawings\SD 9 Inlet General Notes.dwg

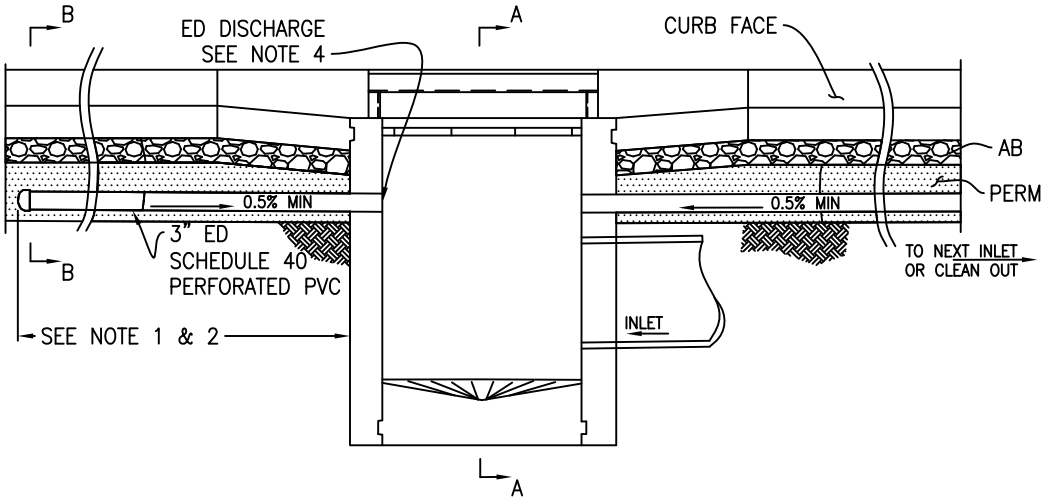

EDGE DRAIN SECTION VIEW

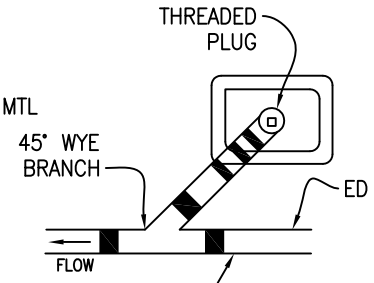

PLAN

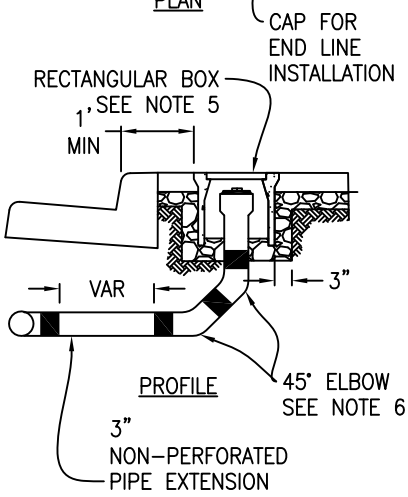

PROFILE

IN-LINE CLEANOUT

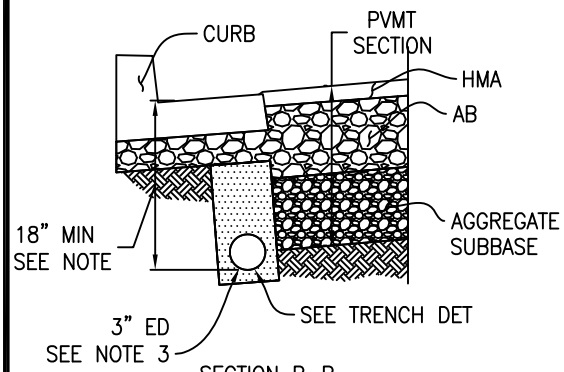

SECTION B–B

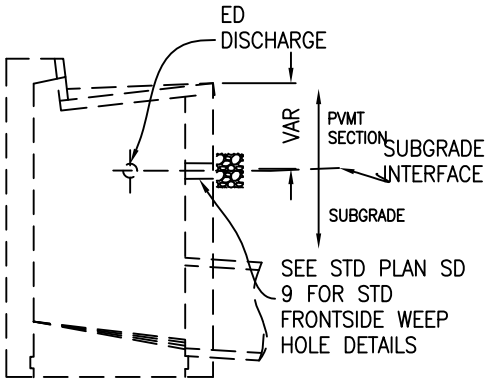

SECTION A–A

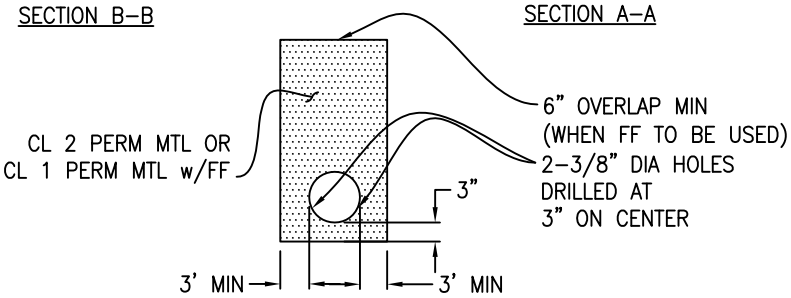

EDGE DRAIN TRENCH DETAIL

NOTES

1. EDGE DRAINS SHALL BE INSTALLED TO THE LENGTHS (L) AS DIRECTED BY THE PUBLIC WORKS DEPARTMENT OR AS SHOWN ON PROJECT CONSTRUCTION PLANS.

2. PLACE CAP AT THE END WHEN DIMENSION "L" GREATER THAN 250', PLACE CLEANOUT EVERY 250' AND A CLEANOUT ATH END OF EDGE DRAIN.

3. EDGE DRAIN PIPE SHALL CONFORM TO SECTION 68, "SUBSURFACE DRAINS, " OF CALIFORNIA DEPARTMENT OF TRANSPORTATION STANDARD SPECIFICATIONS, OR AS APPROVED BY THE PUBLIC WORKS DEPARTMENT.

4. EDGE DRAIN ELEVATION VARIES DEPENDING ON DEPTH OF THE ADJOINING PAVEMENT SECTION. IT SHALL BE AT, OR SLIGHTLY BELOW, THE PAVEMENT SECTION SUBGRADE ELEVATION WITH A MINIMUM

5. RECTANGULAR BOX ($10\frac{5}{8}$" x $17\frac{1}{2}$") SHALL BE CHRISTY, MODEL B9 OR EQUIVALENT.

6. NO SINGLE ELBOW SHALL BE INSTALLED WITH A BEND GREATER THAN 45 DEGREES.

7. ALTERNATE DESIGNS: OTHER PROPRIETARY SUBDRAIN PRODUCTS SUCH AS "MULTI-FLOW DRAINAGE SYSTEMS" MAY BE ALLOWED BY THE PUBLIC WORKS DEPARTMENT ON A CASE-BYCASE BASIS. THESE ALTERNATE EDGE DRAIN SYSTEMS MUST BE PLACED AT THE SAME DEPTHS AS SHOWN ON THIS PLAN WITH ACCESS POINTS FORFLUSHING LOCATED OUTSIDE ROAD PAVEMENT NO LESS THAN EVERY 250.

SCALE: NTS

CITY OF ALBANY, CALIFORNIA		**STANDARD DETAIL**
APPROVED BY: Ray Chan DATE: DECEMBER 2015	**EDGE DRAIN**	STD DETAIL No. **SD 10**

K:\Standard Specifications and details\Details\CAD Drawings\SD 10 Edge Drain.dwg

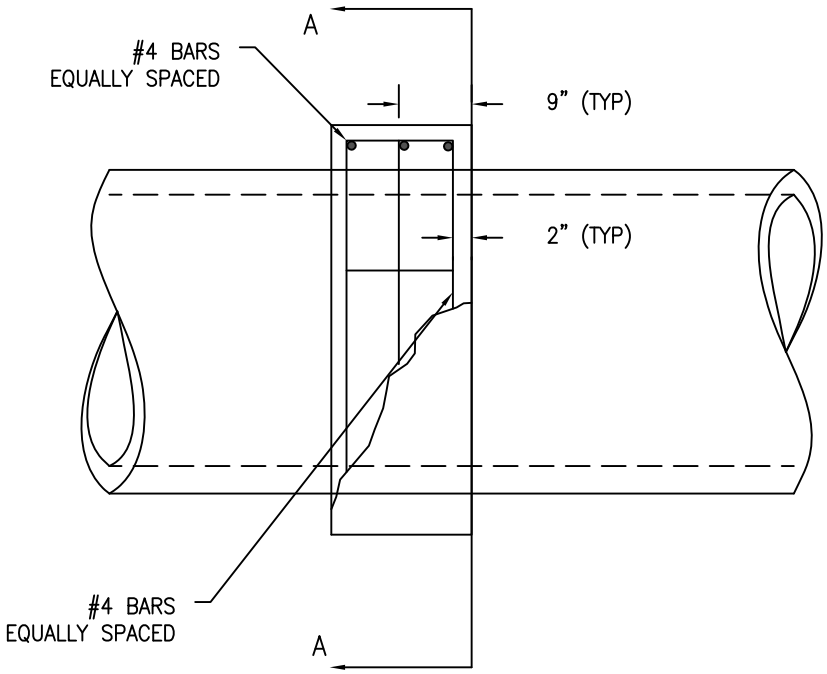

PLAN

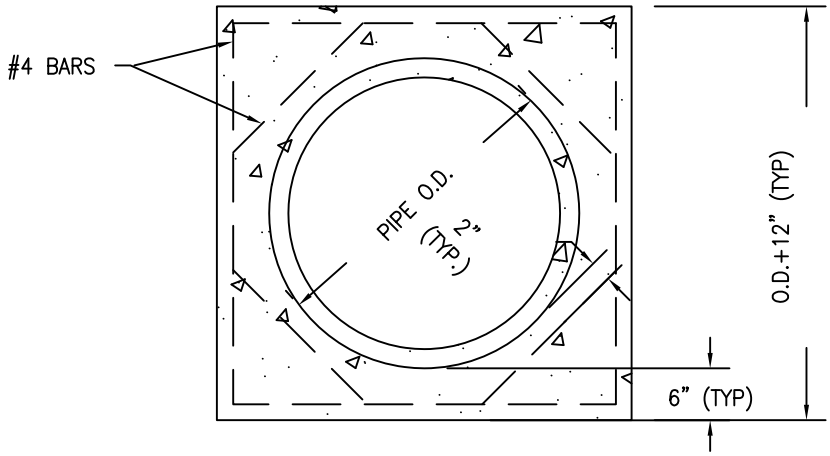

SECTION A–A

SCALE: NTS

CITY OF ALBANY, CALIFORNIA	STANDARD DETAIL	
APPROVED BY: Ray Chan DATE: DECEMBER 2015	REINFORCED CONCRETE PIPE COLLAR	STD DETAIL No. SD 11

K:\Standard Specifications and details\Details\CAD Drawings\SD 11 Reinforced Concrete Pipe Collar.dwg

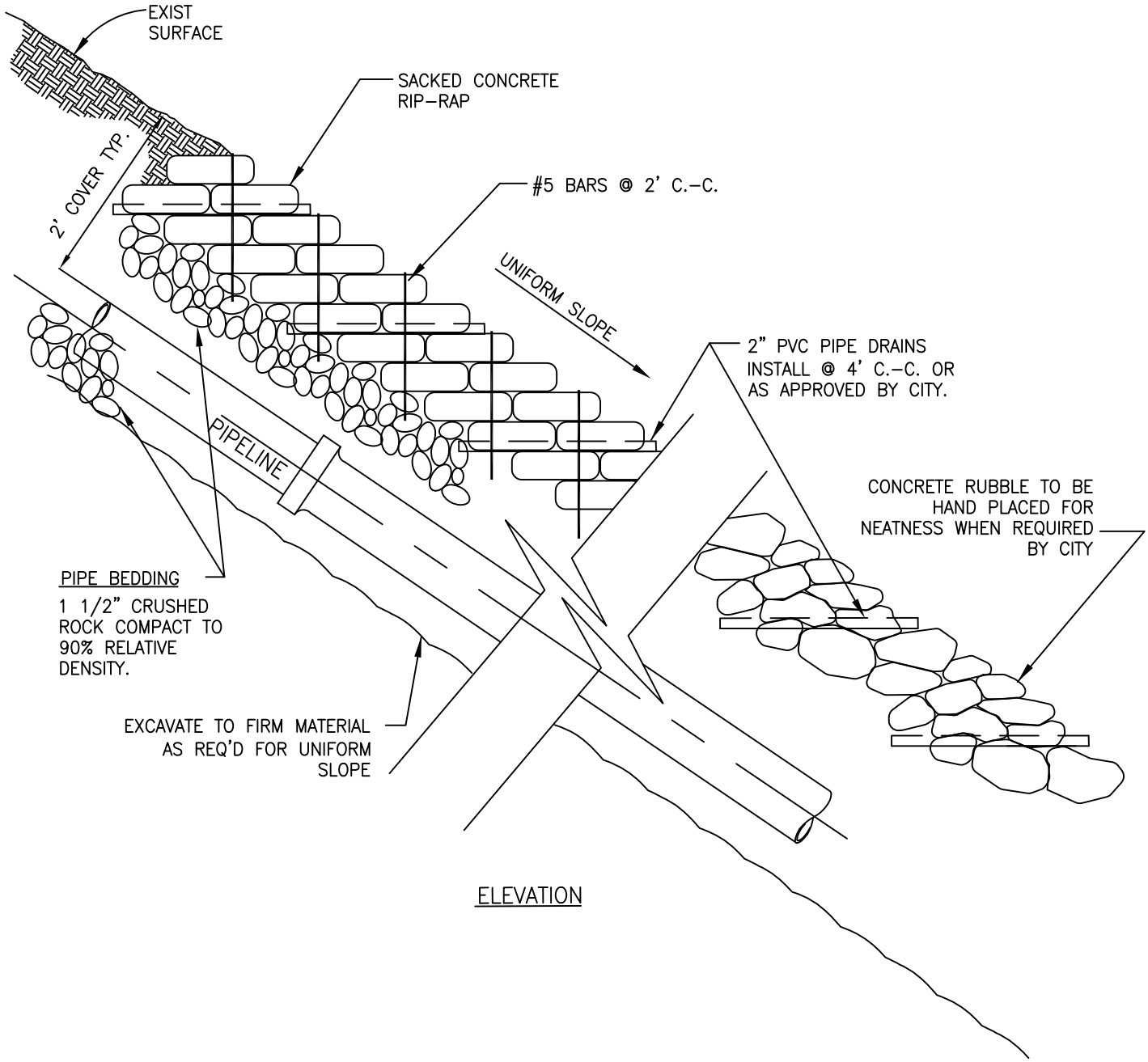

ELEVATION

NOTES:

1. CHECK BOARDS TO BE PLACED ON ALL SLOPES GREATER THAN 50% OR WHERE REQUIRED BY THE CITY. SEE SS 13.
2. ALL SLOPES 50% OR GREATER SHALL HAVE CLASS 150 C.I. BELL & SPIGOT PIPE.
3. CRUSHED ROCK SHALL COMPLY WITH ALBANY SPECIFICATIONS FOR PUBLIC WORKS CONSTRUCTION, PART 2 SEC 200 – 1.2

SCALE: NTS

CITY OF ALBANY, CALIFORNIA	STANDARD DETAIL	
APPROVED BY: Ray Chan DATE: DECEMBER 2015	STANDARD RIP-RAP INSTALLATION	STD DETAIL No. SD 12

K:\Standard Specifications and details\Details\CAD Drawings\SD 12 Standard Rip Rap Installation.dwg