City of Albany

STANDARD DETAILS

CREATED BY:

PUBLIC WORKS DEPARTMENT

DATE ISSUED

December 2015

CITY OF ALBANY
ALAMEDA COUNTY, CALIFORNIA

STANDARD DETAILS
For use with the
City of Albany Standard Specifications

STREETS

ST 1	AC Dike, Curb and Gutter Detail
ST 2	Driveway Type 1
ST 3	Driveway Type 2
ST 4	Sidewalk: Type I and II
ST 5	Curb and Sidewalk Joints
ST 6	Curb, Gutter and Sidewalk Repairs
ST 7	Residential Driveway Repairs
ST 8	Legend & Notes – Sidewalks, Driveways and Curb and Gutter
ST 9.1	Curb Ramp Details (Case A)
ST 9.2	Curb Ramp Details (Case B)
ST 9.3	Curb Ramp Details (Case C)
ST 9.4	Curb Ramp Details (Modified Case C)
ST 9.5	Curb Ramp Details (Case D)
ST 9.6	Curb Ramp Details (Case E)
ST 9.7	Curb Ramp Details (Case F)
ST 9.8	Curb Ramp Details (Case G)
ST 9.9	Curb Ramp Details (Case CM)
ST 9.10	Curb Ramp Details – Grooving and Domes
ST 9.11	Curb Ramp Details (Notes)
ST 10.1	Island Passageway Details (Type A)
ST 10.2	Island Passageway Details (Type B)
ST 10.3	Island Passageway Details (Type C)
ST 10.4	Island Passageway Details and Notes
ST 11	Street & Traffic Sign Mounting Standards
ST 12	Sign Anchor Detail
ST 13	Trench Surface Restoration Detail
ST 14	Sidewalk Drain Residential Lots
ST 15	Construction Warning Sign
ST 16	Sidewalk Trip Hazard Removal
ST 17	NPDES Medallion
ST 18	Sidewalk Cross Drain
ST 19	Concrete Valley Gutter and Apron
ST 20	Retrofit Sidewalk Flare for Obstruction
ST 21	Concrete Monument Section with Disc
ST 22.1	Chain Link Fence and Gate
ST 22.2	Chain Link Fence and Gate - Notes

CITY OF ALBANY
ALAMEDA COUNTY, CALIFORNIA

STANDARD DETAILS
For use with the
City of Albany Standard Specifications

SANITARY SEWER

SS 1	Standard Manhole Frame and Cover
SS 2	Standard Sewer Manhole
SS 3	Raised Manhole Ring and Cover
SS 4	Shallow Manhole
SS 5	New Pipe to Existing Manhole Connection
SS 6	Standard Rodding Inlet
SS 7	Typical Trench Section
SS 8	Standard Laterals and Cleanouts
SS 9	Standard Cleanouts and Backwater Prevention Device
SS 10	Backwater Shutoff and Check Valve System
SS 11	Main Sewer Protection Above Utility Crossing
SS 12	Main Sewer Protection Below Utility Crossing
SS 13	Side Sewer Reconstruction at Utility Crossing
SS 14	Standard Concrete Pipe Protection
SS 15	Standard Redwood Check Board

DRAINAGE

SD 1.1	Type “A” Inlet
SD 1.2	Type “A” Inlet - Notes
SD 2.1	Type “B” Inlet
SD 2.2	Type “B” Inlet - Notes
SD 3.1	Type “C” Inlet
SD 3.2	Type ”C” Inlet - Notes
SD 4.1	Type “D” Inlet
SD 4.2	Type “D” Inlet - Notes
SD 5.1	Type “E” Inlet
SD 5.2	Type “E” Inlet - Notes
SD 6.1	Inlet Frame and Grate For Type “A”, “B” & “C”
SD 6.2	Inlet Frame and Grate For Type “A”, “B” & “C”
SD 7	Precast Manhole, Type I Base, Frame & Cover
SD 8	Type II Manhole Base
SD 9	Standard Inlet/Manhole Plan General Notes
SD 10	Edge Drain
SD 11	Reinforced Concrete Pipe Collar
SD 12	Standard Rip-Rap Installation

Rev. Issue Date: 12/15/2015 **By**: Ray Chan

Ray Chan, City Engineer
RCE 56473, Exp. 6/30/2017

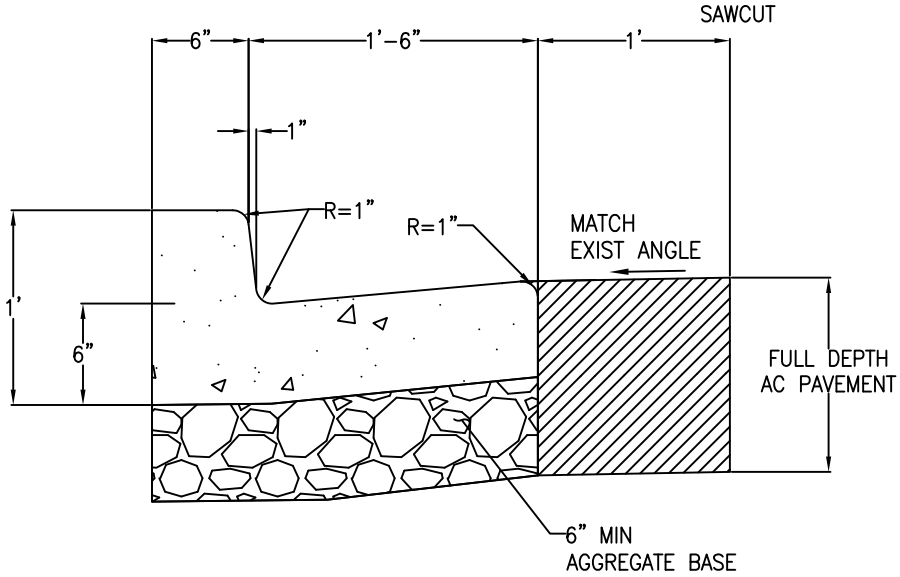

TYPE "A" CURB AND GUTTER

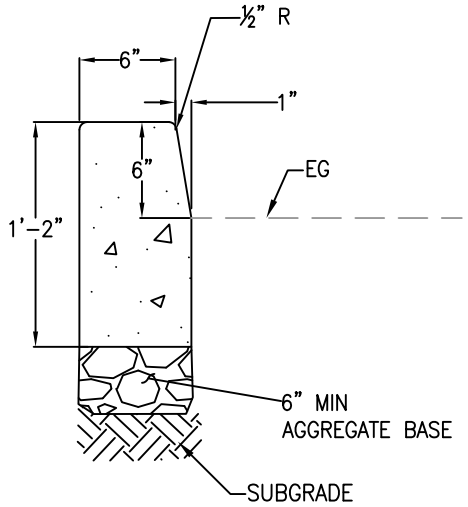

TYPE "B" CURB

CURBS

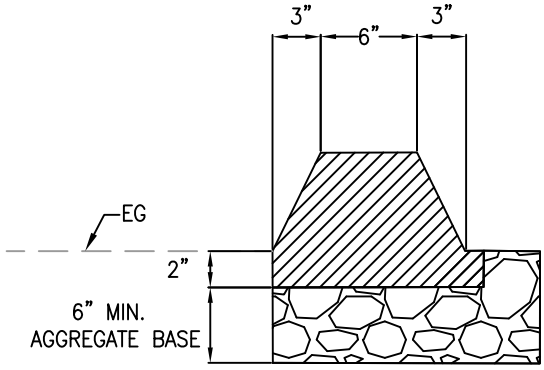

AC BERM

NOTE:

1. CONSTRUCT TYPE "A" CURB AND GUTTER WITH 10' BUFFER TO CONFORM GUTTER TO EXISTING CONDITIONS.
2. SAWCUT APPROXIMATELY 1' FROM THE EDGE OF CURB ON THE ROADWAY SIDE TO ALLOW SPACE FOR CONSTRUCTION. PLUG GAP WITH NEW ASPHALT CONCRETE.
3. WHEN POSSIBLE USE TYPE "A" CURB AND GUTTER WITH SIDEWALK AND TYPE "B" CURB WHEN CONSTRUCTING MEDIANS AT CENTER OF ROADWAY. AC BERM USED AT THE APPROVAL OF THE CITY ENGINEER.

SCALE: NTS

CITY OF ALBANY, CALIFORNIA	STANDARD DETAIL	
APPROVED BY: Ray Chan DATE: DECEMBER 2015	AC DIKE, CURB AND GUTTER DETAIL	STD DETAIL No. ST 1

K:\Standard Specifications and details\Details\CAD Drawings\ST 1 AC Dike Curb and Gutter.dwg

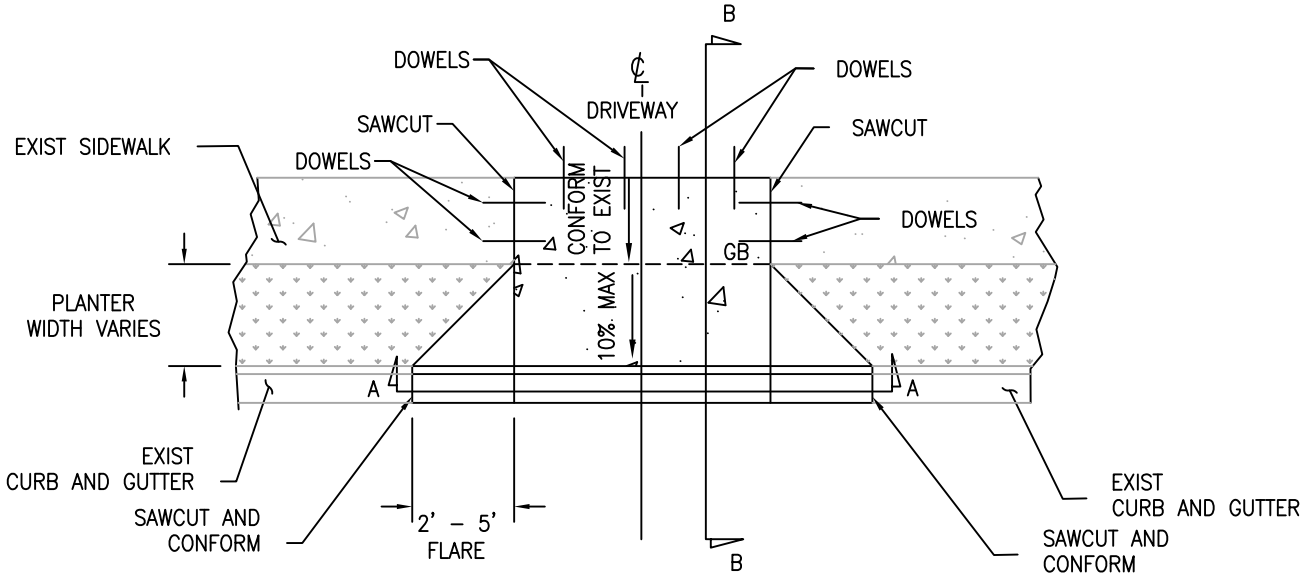

PLAN

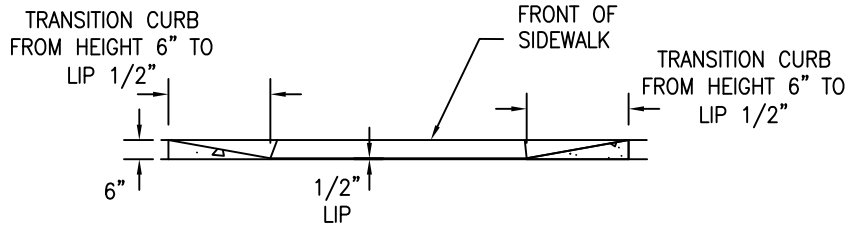

SECTION A–A

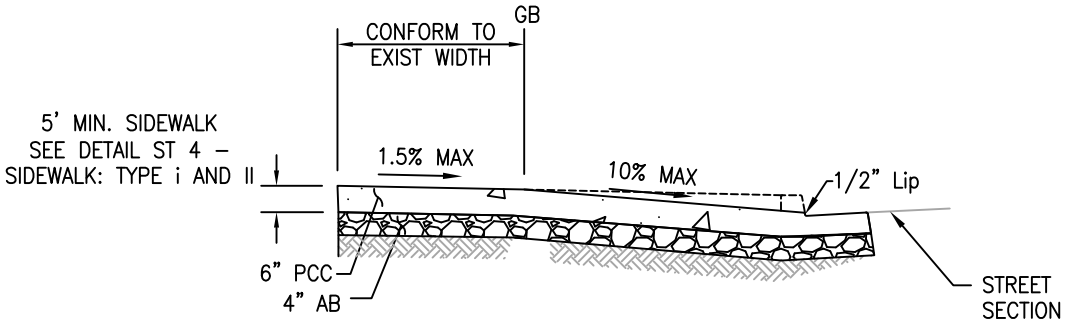

SECTION B–B

NOTES:

1. CONSTRUCT DRIVEWAY TYPE 2 TO CONFORM TO EXISTING DRIVEWAY, SIDEWALK AND CURB AND GUTTER
2. CONFORM TO WIDTHS OF SIDEWALKS AND CURB AND GUTTER WIDTHS AND HEIGHTS. WHENEVER POSSIBLE MAINTAIN MINIMUM WIDTH OF 5' FOR SIDEWALKS, 1'–6" FOR GUTTERS AND 6" FOR CURB HEIGHTS.

SCALE: NTS

CITY OF ALBANY, CALIFORNIA	STANDARD DETAIL	
APPROVED BY: Ray Chan DATE: DECEMBER 2015	DRIVEWAY TYPE 1	STD DETAIL No. ST 2

K:\Standard Specifications and details\Details\CAD Drawings\ST 2 Driveway Type 1.dwg

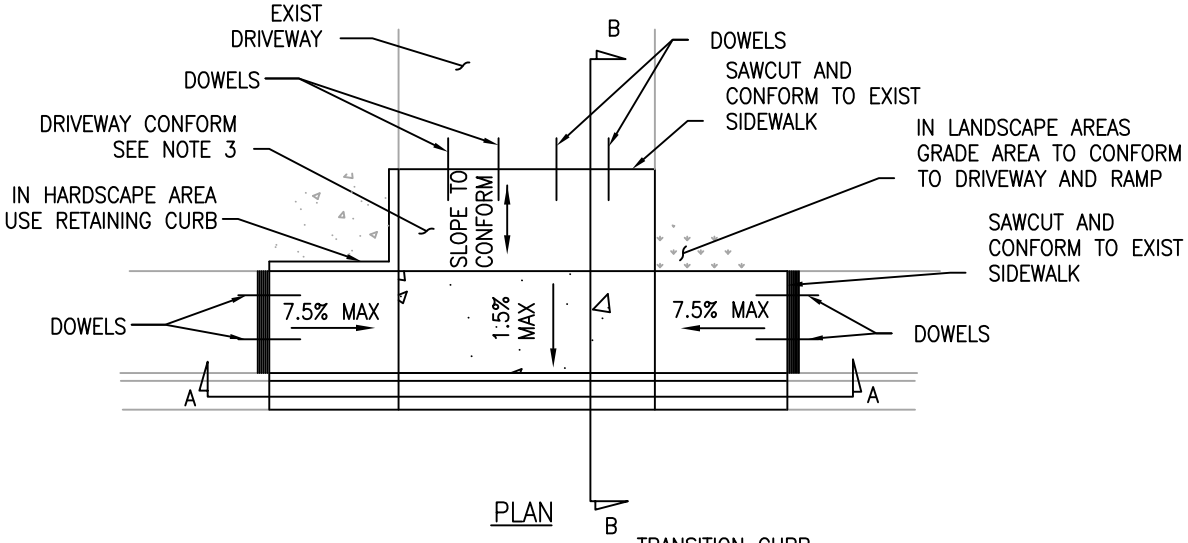

PLAN

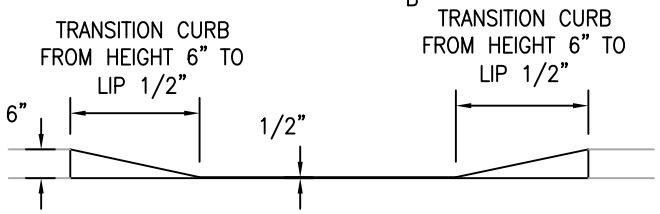

SECTION A–A

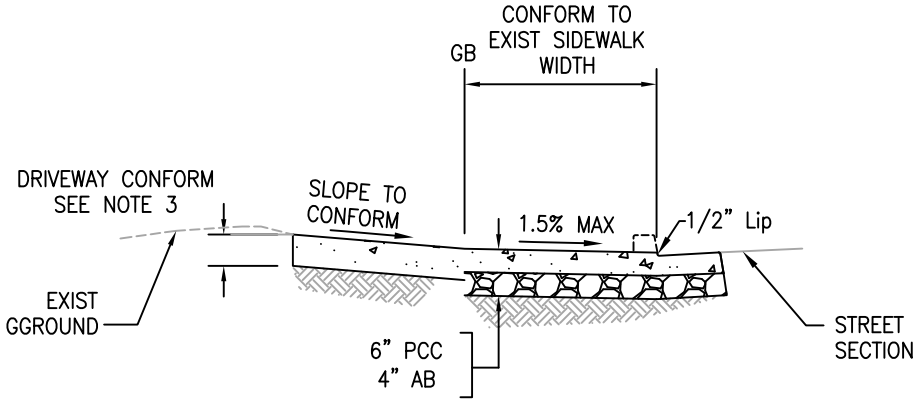

SECTION B–B

NOTES:

1. CONSTRUCT DRIVEWAY TYPE 2 TO CONFORM TO EXISTING DRIVEWAY, SIDEWALK AND CURB AND GUTTER
2. CONFORM TO WIDTHS OF SIDEWALKS AND CURB AND GUTTER WIDTHS AND HEIGHTS. WHENEVER POSSIBLE MAINTAIN MINIMUM WIDTH OF 5' FOR SIDEWALKS, 1'–6" FOR GUTTERS AND 6" FOR CURB HEIGHTS.
3. FOR DRIVEWAY CONFORM MATCH THE SAME MATERIAL AS THE EXISTING DRIVEWAY.

SCALE: NTS

CITY OF ALBANY, CALIFORNIA	STANDARD DETAIL	
APPROVED BY: Ray Chan DATE: DECEMBER 2015	DRIVEWAY TYPE 2	STD DETAIL No. ST 3

K:\Standard Specifications and details\Details\CAD Drawings\ST 3 Driveway Type 2.dwg

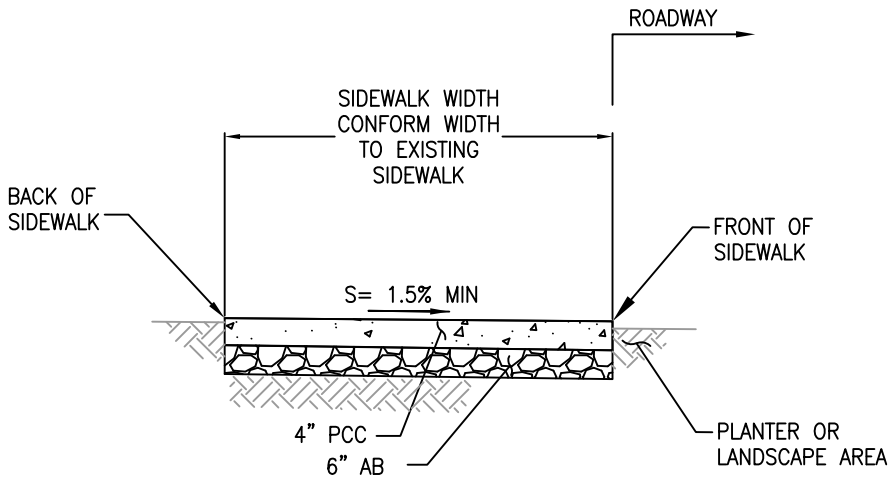

SIDEWALK – TYPE I

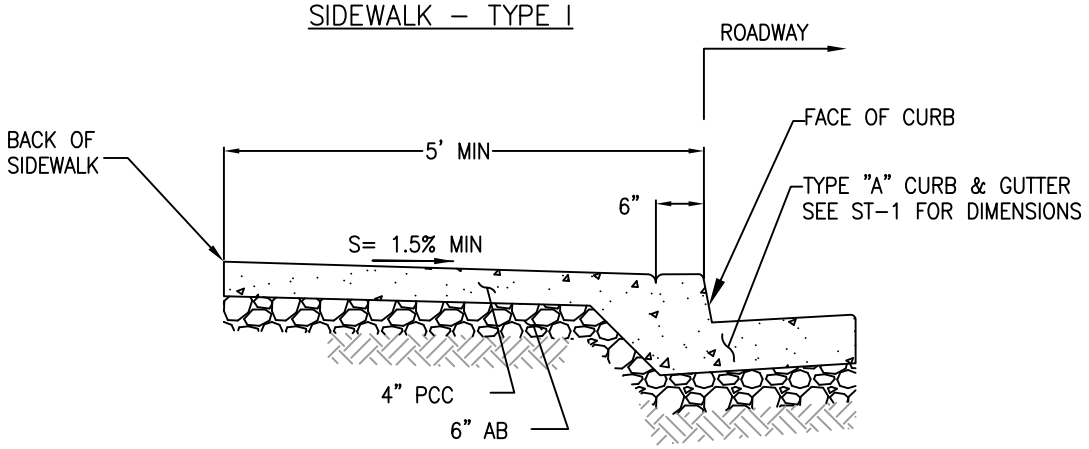

SIDEWALK – TYPE II (MONOLITHIC SIDEWALK AND CURB & GUTTER)

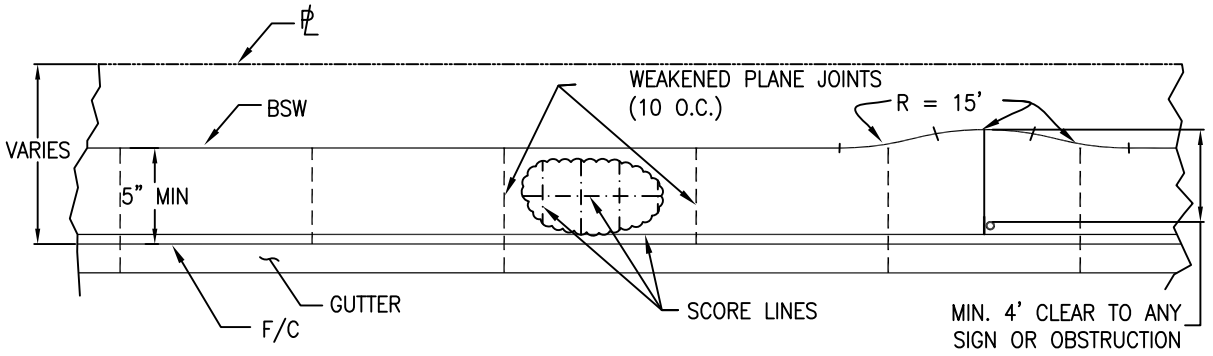

NOTES

1. FOR NEW SIDEWALK MINIMUM WIDTH IS 5' UNLESS APPROVED BY CITY ENGINEER. WHEN PLACING SIDEWALK CONFORM TO EXISTING WIDTH OF SIDEWALK. TYPE 1 WIDTH MEASURED FROM FRONT OF SIDEWALK TO BACK OF SIDEWALK. TYPE 2 WIDTH MEASURED FROM FACE OF CURB TO BACK OF SIDEWALK.

SCALE: NTS

CITY OF ALBANY, CALIFORNIA	STANDARD DETAIL	
APPROVED BY: Ray Chan DATE: DECEMBER 2015	SIDEWALK: TYPE I AND II	STD DETAIL No. ST 4

K:\Standard Specifications and details\Details\CAD Drawings\ST 4 Sidewalk.dwg

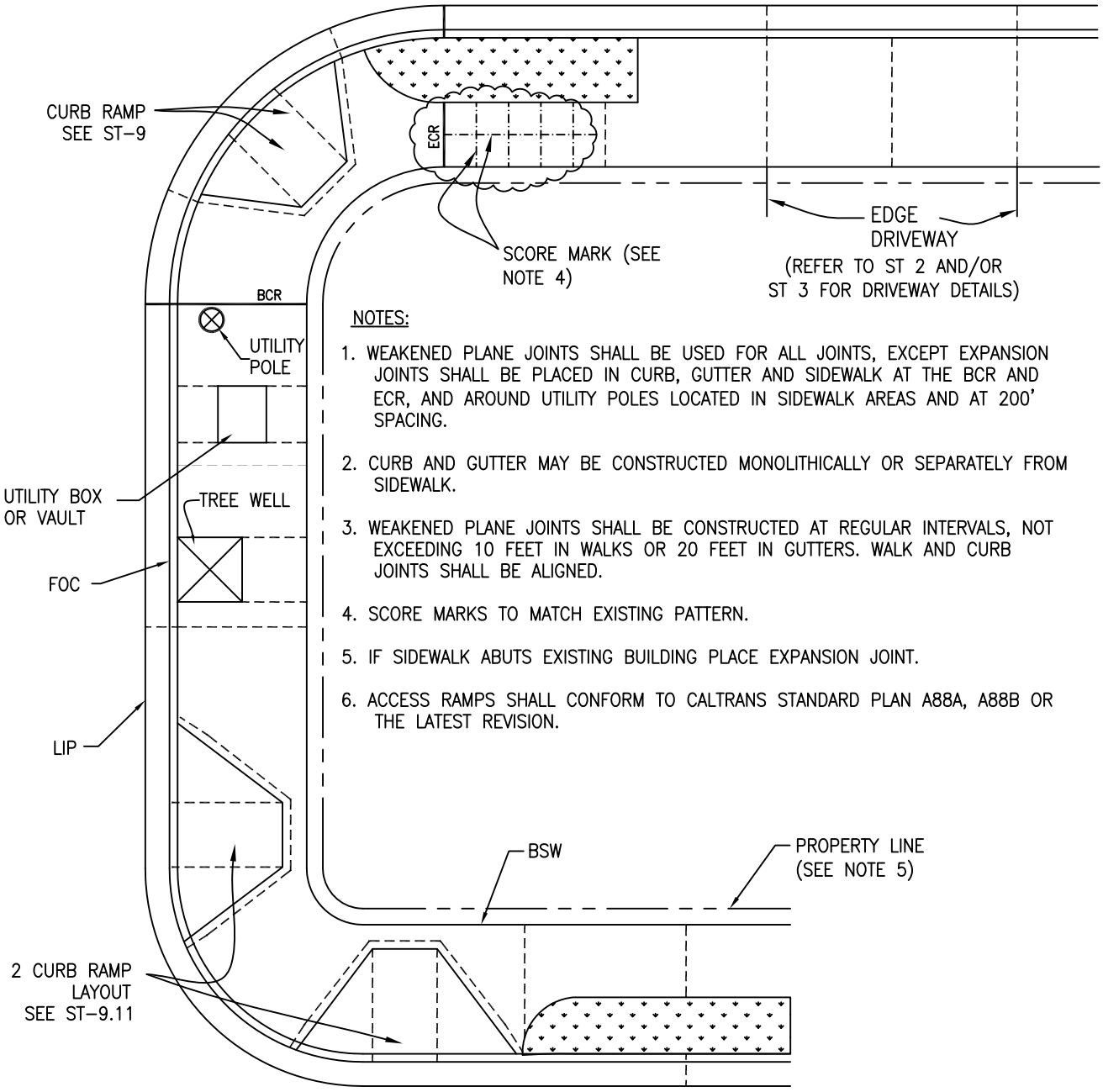

NOTES:

1. WEAKENED PLANE JOINTS SHALL BE USED FOR ALL JOINTS, EXCEPT EXPANSION JOINTS SHALL BE PLACED IN CURB, GUTTER AND SIDEWALK AT THE BCR AND ECR, AND AROUND UTILITY POLES LOCATED IN SIDEWALK AREAS AND AT 200' SPACING.
2. CURB AND GUTTER MAY BE CONSTRUCTED MONOLITHICALLY OR SEPARATELY FROM SIDEWALK.
3. WEAKENED PLANE JOINTS SHALL BE CONSTRUCTED AT REGULAR INTERVALS, NOT EXCEEDING 10 FEET IN WALKS OR 20 FEET IN GUTTERS. WALK AND CURB JOINTS SHALL BE ALIGNED.
4. SCORE MARKS TO MATCH EXISTING PATTERN.
5. IF SIDEWALK ABUTS EXISTING BUILDING PLACE EXPANSION JOINT.
6. ACCESS RAMPS SHALL CONFORM TO CALTRANS STANDARD PLAN A88A, A88B OR THE LATEST REVISION.

LEGEND:

- - - - WEAKENED PLANE JOINT
—— EXPANSION JOINT
-·-·- SCORE MARK
BCR = BEGINING OF CURB RETURN
ECR = END OF CURB RETURN

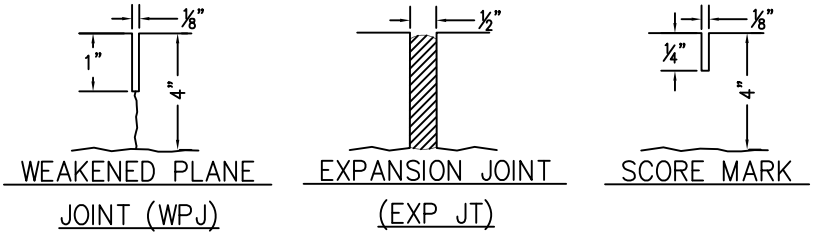

SCALE: NTS

CITY OF ALBANY, CALIFORNIA	STANDARD DETAIL	
APPROVED BY: Ray Chan DATE: DECEMBER 2015	CURB AND SIDEWALK JOINTS	STD DETAIL No. ST 5

K:\Standard Specifications and details\Details\CAD Drawings\ST 5 Curb and Sidewalk Joints.dwg

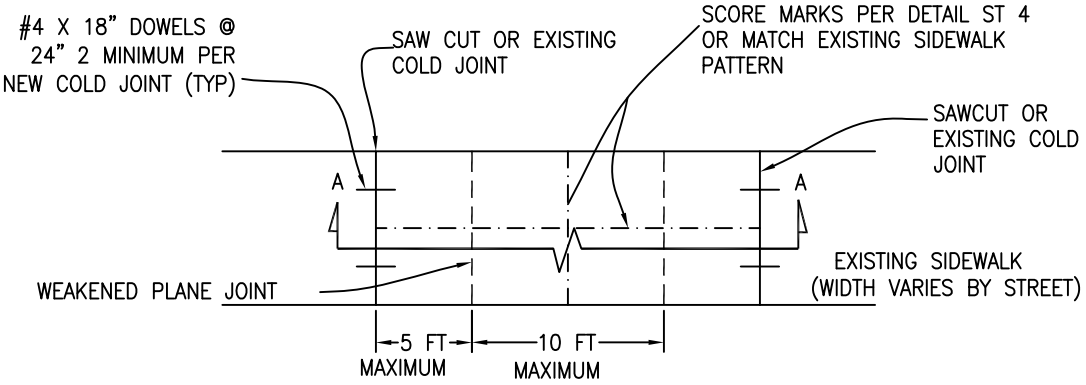

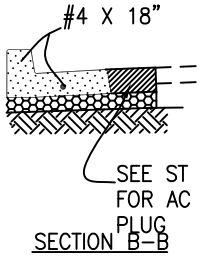

SECTION B–B

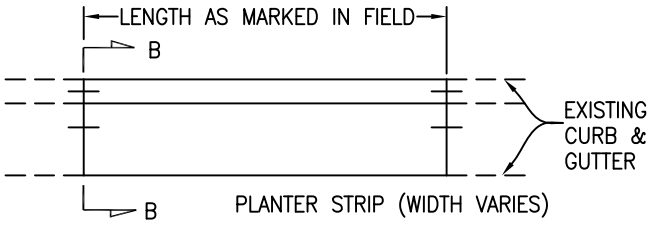

PLAN

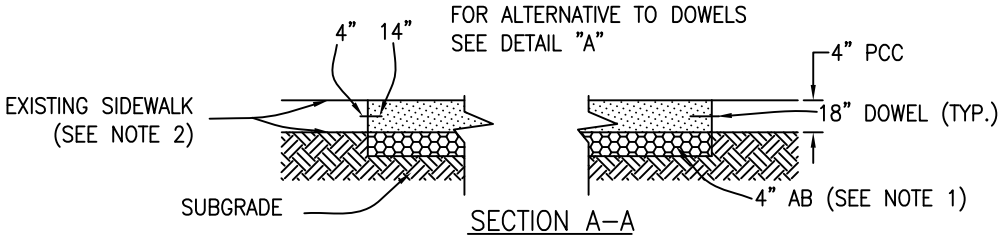

SECTION A–A

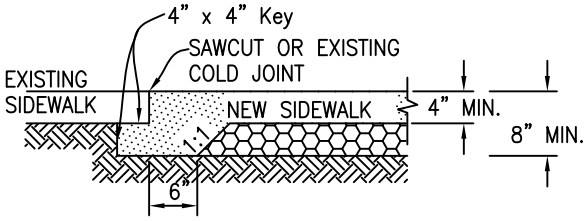

DETAIL "A"
ALTERNATIVE KEY DETAIL

NOTES:

1. IN LOCATIONS WHERE TREE ROOTS ARE WITHIN 8" OF FINISHED GRADE, DELETE 4" AB AND PLACE 6" X 6" X 10 GA WIRE MESH IN CONCRETE.
2. WHEN EXISTING SIDEWALK IS LESS THAN 4" THICK, DETAIL A MAY BE SUBSTITUTED FOR DOWELS.

SCALE: NTS

CITY OF ALBANY, CALIFORNIA	STANDARD DETAIL	
APPROVED BY: Ray Chan DATE: DECEMBER 2015	CURB, GUTTER & SIDEWALK REPAIRS	STD DETAIL No. ST 6

K:\Standard Specifications and details\Details\CAD Drawings\ST 6 Curb Gutter and Sidewalk Repairs.dwg

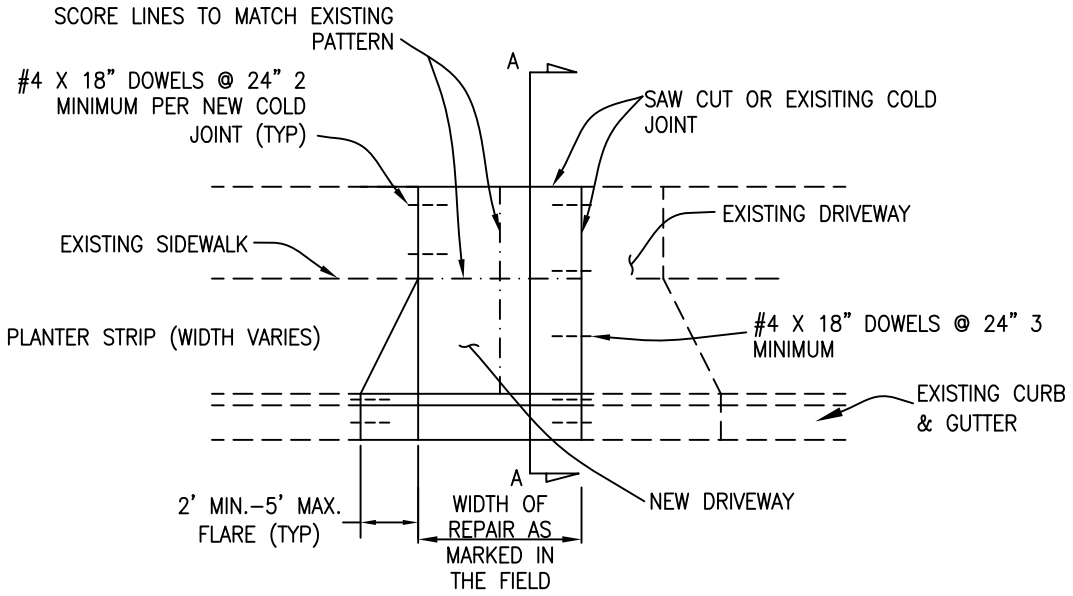

PLAN

SEE DETAIL A, ST 5
FOR ALTERNATIVE TO DOWELS

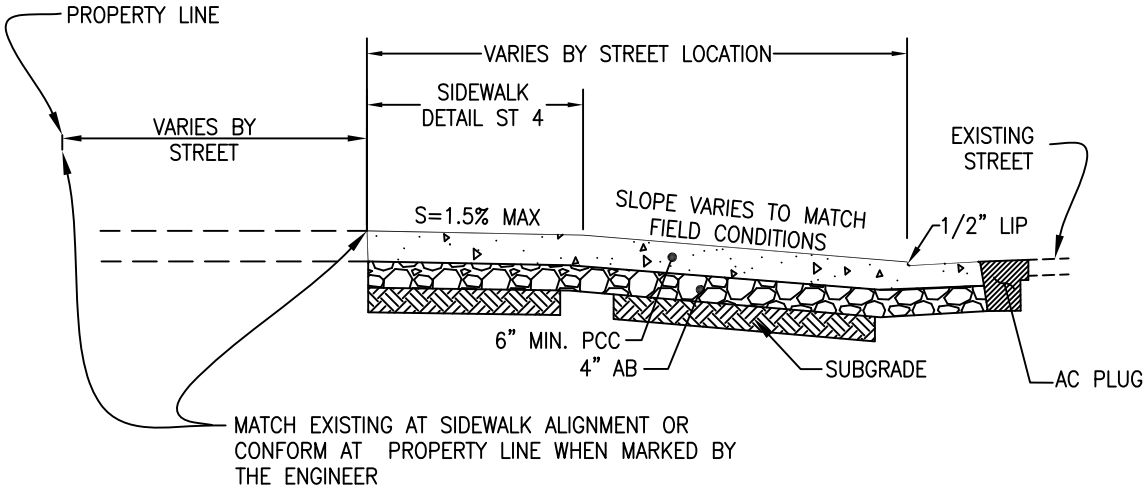

SECTION A–A

SCALE: NTS

CITY OF ALBANY, CALIFORNIA	STANDARD DETAIL	
APPROVED BY: Ray Chan DATE: DECEMBER 2015	RESIDENTIAL DRIVEWAY REPAIRS	STD DETAIL No. ST 7

K:\Standard Specifications and details\Details\CAD Drawings\ST 7 Residential Driveway Repairs.dwg

LEGEND AND ABBREVIATION

(PCC)=CONCRETE

(AB)=AGGREGATE BASE

=SUBGRADE/EXIST. GRADE

(BSW)=BACK OF SIDEWALK

PL =PROPERTY LINE

FC=FACE OF CURB

NOTES

1. SUBGRADE SHALL BE NATIVE MATERIAL, 6" DEEP, 90% RELATIVE COMPACTION.
2. CUSHION MATERIAL SHALL BE CLASS 2 AGGREGATE BASE, PER CALTRANS STANDARD SPECIFICATIONS, SECTION 26; COMPACTED TO 95% R.C.
3. CONCRETE SHALL BE 520-C-2500, 4" MAXIMUM SLUMP.
4. CURB, GUTTER AND SIDEWALK TO BE PLACED MONOLITHICALLY WHERE POSSIBLE. WHERE NON-MONOLITHIC, PLACE DOWELS AND/OR KEYWAY PER ST 1.
5. PLACE 1/2" EXPANSION JOINT AT 200' SPACINGS AND AT RETURNS.
6. PLACE 3/4" DEEP WEAKENED PLANE JOINT AT 20' MAXIMUM SPACINGS THROUGH CURB AND GUTTER, AND 10' MAXIMUM SPACINGS THROUGH SIDEWALK, DRIVEWAY AND AT EDGES OF DRIVEWAYS AND AT 1/2 WIDTH FOR SIDEWALKS AND DRIVEWAYS OVER 10 FEET IN WIDTH.
7. PLACE SCORE LINES AT 5' MINIMUM SPACING BETWEEN WEAKENED PLANE JOINTS AND ALONG BACK OF CURB. MATCH EXISTING PATTERN IN RESIDENTIAL NEIGHBORHOODS.
8. PLACE NO. 4 REINFORCING STEEL BARS AT 18 INCHES EACH WAY IN INDUSTRIAL, COMMERCIAL AND STREET LEVEL DRIVEWAYS.
9. CONCRETE TO HAVE A SOFT BROOM FINISH. CLEAR CURING COMPOUND TO BE APPLIED PER MANUFACTURER'S SPECIFICATIONS.
10. WHEN REPLACING CURB, GUTTER, SIDEWALK, AND DRIVEWAY, MATCH EXISTING WIDTH AND SCORING. SAWCUTS SHALL BE AT JOINTS OR SCORE LINES. INSERT NO. 4 BY 18" LONG STEEL DOWELS AT 24" ON CENTER (2 MINIMUM FOR CURB AND GUTTER). ADD 1.5 LB. LAMPBLACK PER CUBIC YARD.
11. STAMP 3" HIGH LETTERS – "W"(WATER) AND "S"(SEWER) IN FACE OF CURB TO LOCATE LATERALS.
12. SAWCUT EXISTING A.C. PAVEMENT WITH POWER SAW.
13. ASPHALT CONCRETE SHALL BE 1/2" MAX AGGREGATE TYPE A PER CALTRANS SEC. 39, 3" MAXIMUM LIFTS.

CITY OF ALBANY, CALIFORNIA		STANDARD DETAIL
APPROVED BY: Ray Chan DATE: DECEMBER 2015	LEGEND & NOTES- SIDEWALKS, DRIVEWAYS AND CURB & GUTTER	STD DETAIL No. ST 8

K:\Standard Specifications and details\Details\CAD Drawings\ST 8 Notes-Sidewalks Driveways Curb and Gutter.dwg

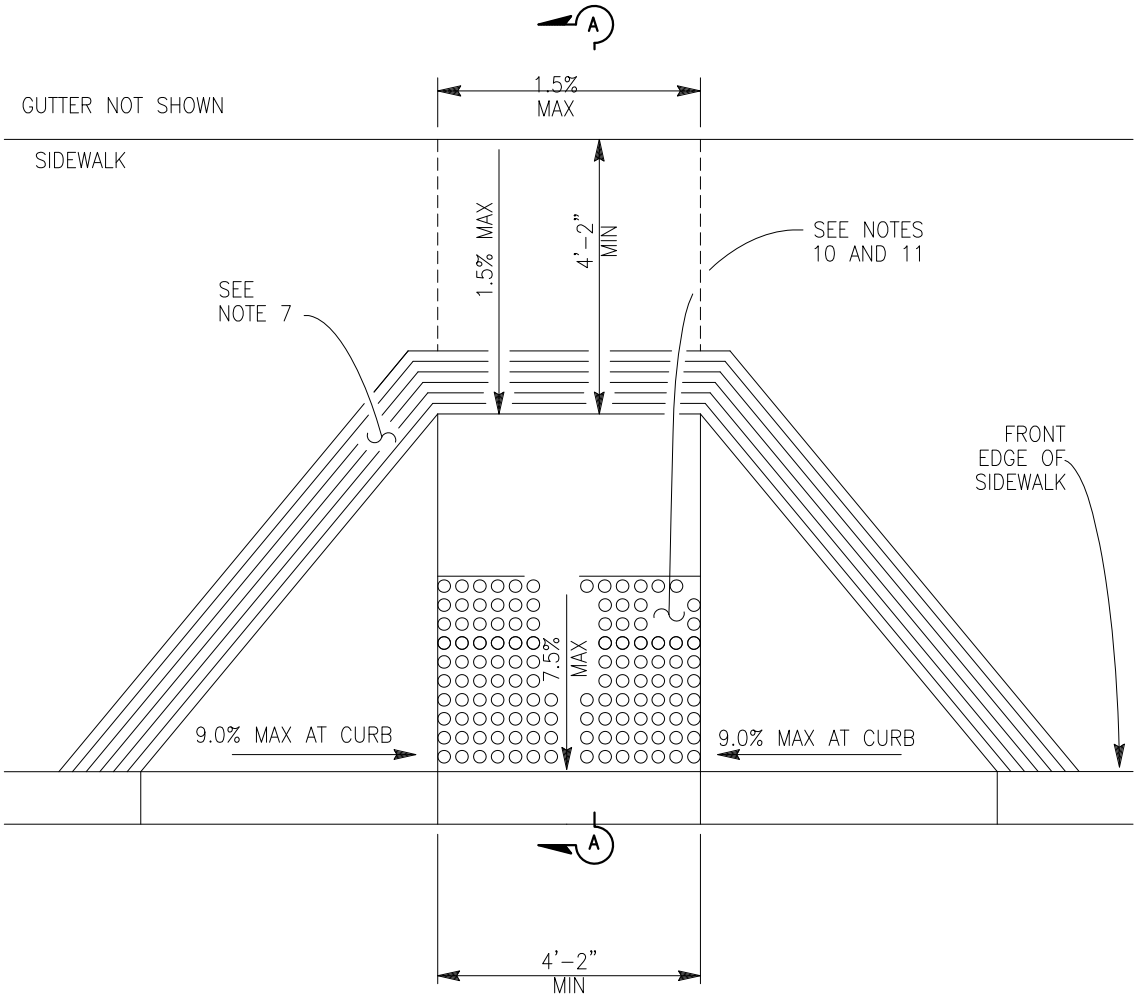

CASE A

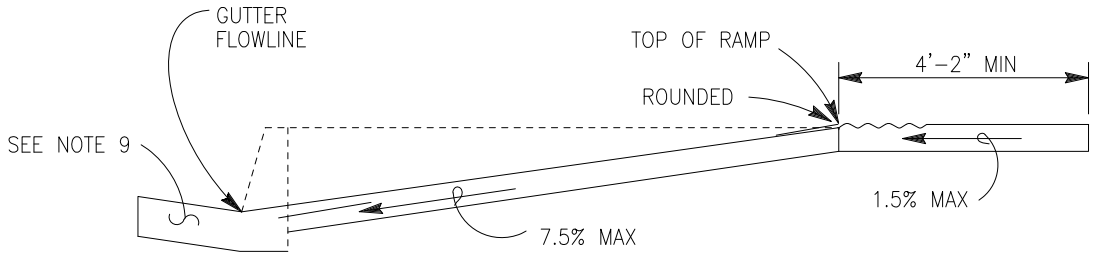

SECTION A–A

FOR NOTES SEE SHEET ST 9.11

SCALE: NTS

CITY OF ALBANY, CALIFORNIA	STANDARD DETAIL	
APPROVED BY: Ray Chan DATE: DECEMBER 2015	CURB RAMP DETAILS (CASE A)	STD DETAIL No. ST 9.1

K:\Standard Specifications and details\Details\CAD Drawings\ST 9 Curb Ramp Details.dwg

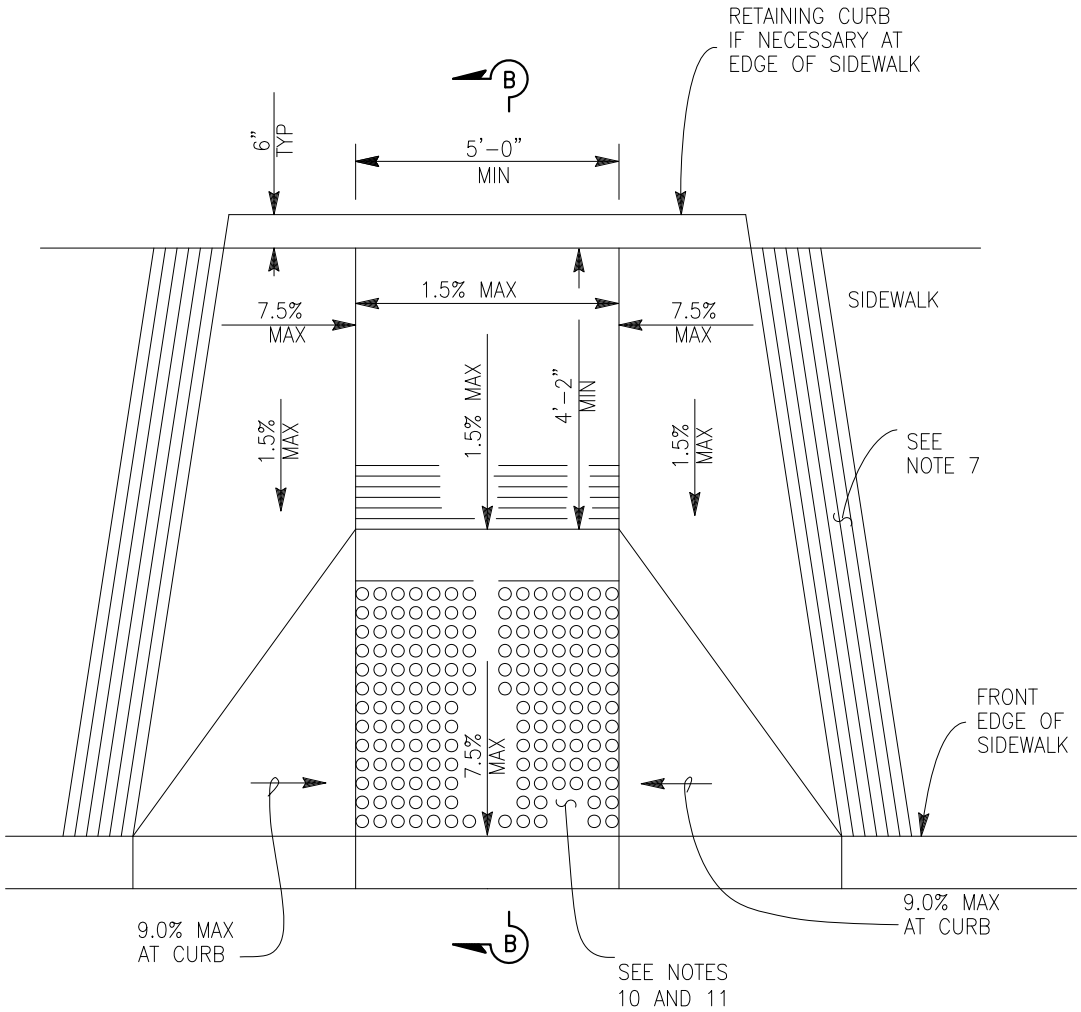

CASE B

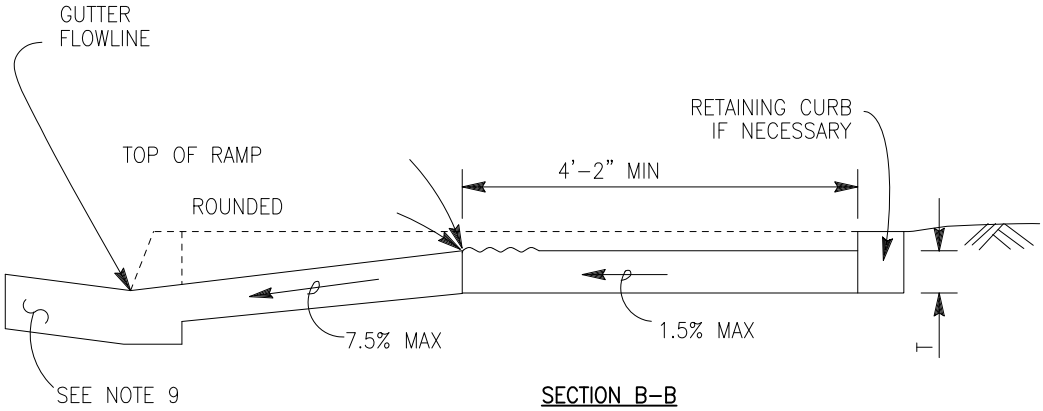

SECTION B–B

DEPRESS ENTIRE SIDEWALK AS REQUIRED

FOR NOTES SEE SHEET ST 9.11

SCALE: NTS

CITY OF ALBANY, CALIFORNIA	STANDARD DETAIL	
APPROVED BY: Ray Chan DATE: DECEMBER 2015	CURB RAMP DETAILS (CASE B)	STD DETAIL No. ST 9.2

K:\Standard Specifications and details\Details\CAD Drawings\ST 9 Curb Ramp Details.dwg

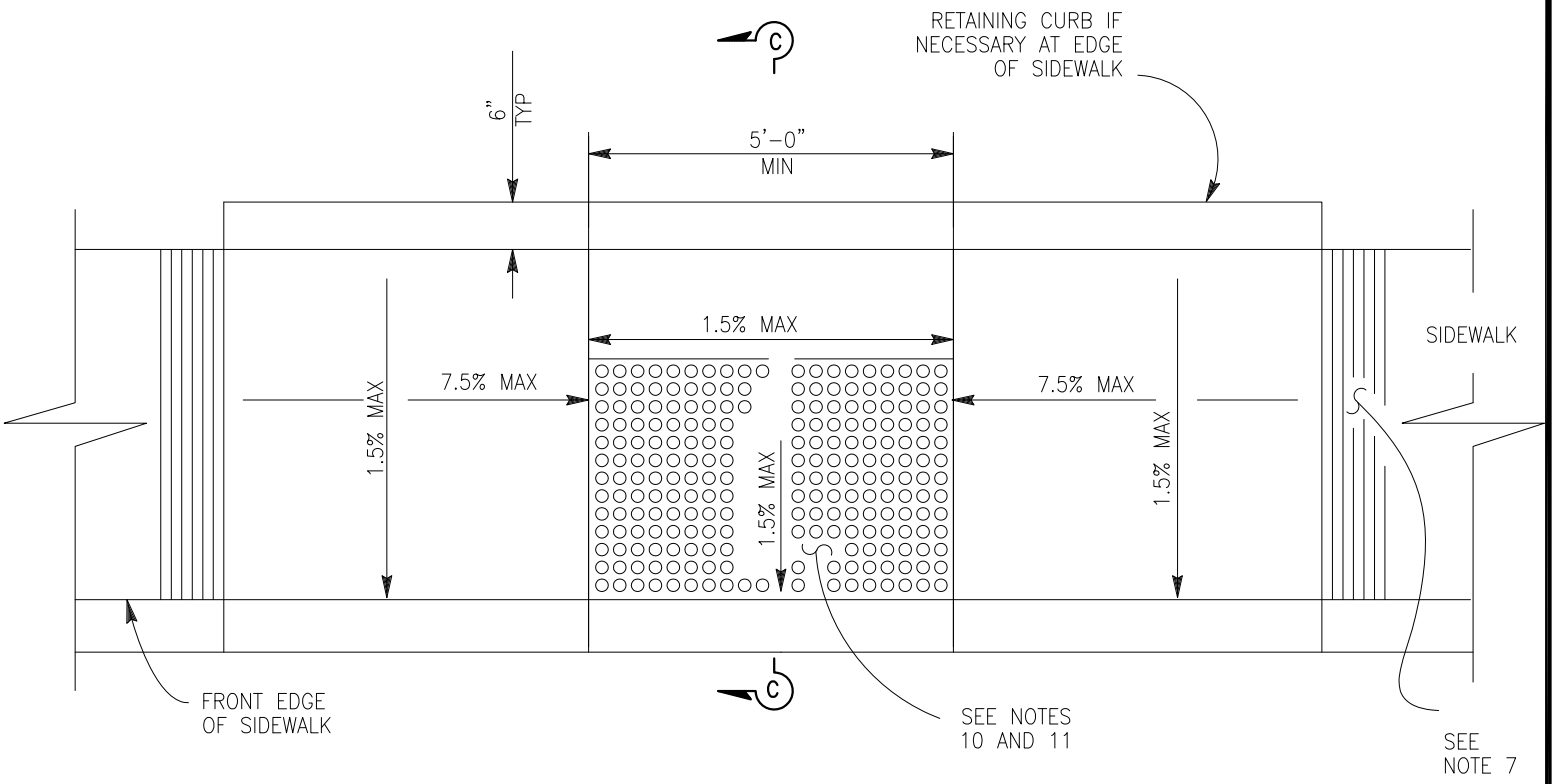

CASE C

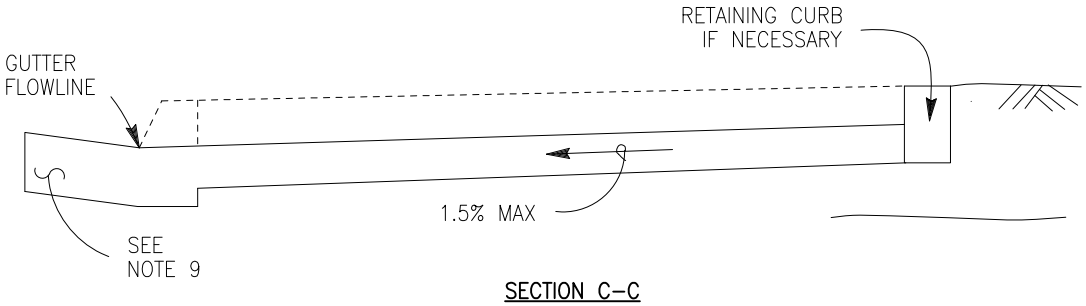

SECTION C–C

FOR NOTES SEE SHEET ST 9.11

SCALE: NTS

CITY OF ALBANY, CALIFORNIA	STANDARD DETAIL	
APPROVED BY: Ray Chan DATE: DECEMBER 2015	CURB RAMP DETAILS (CASE C)	STD DETAIL No. ST 9.3

K:\Standard Specifications and details\Details\CAD Drawings\ST 9 Curb Ramp Details.dwg

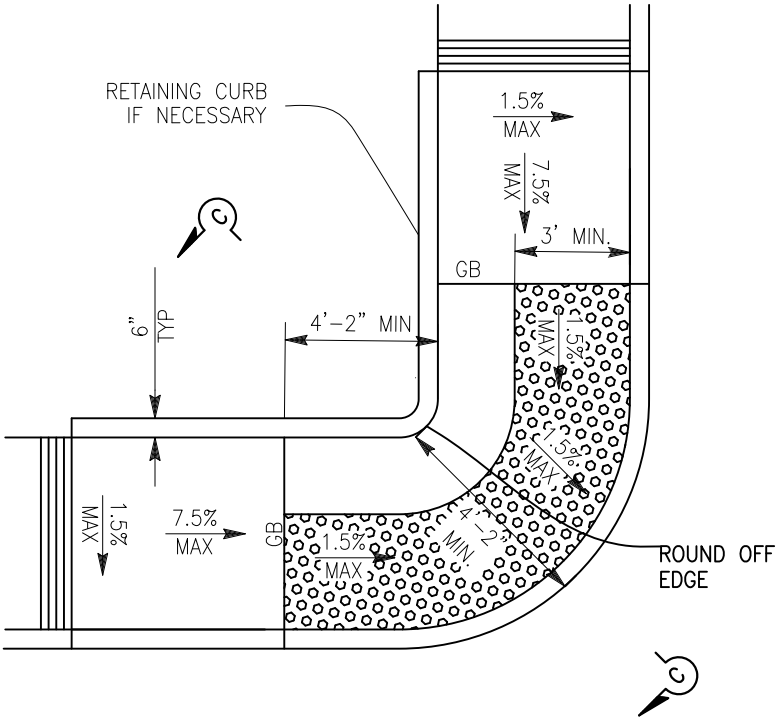

MODIFIED CASE C

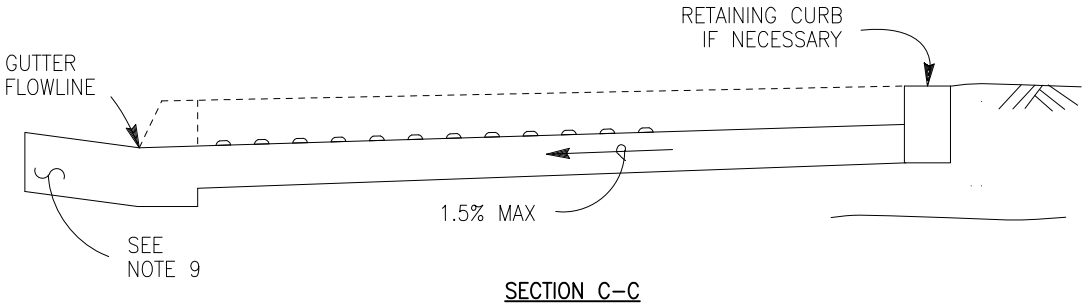

SECTION C-C

1. WHEN CONFORMING TO SIDEWALK MAINTAIN MAXIMUM SLOPE OF 7.5% FOR 10 FEET THEN USE NECESSARY SLOPE ON PROPOSED SIDEWALK FOR 10 FEET TO CONFORM TO EXISTING SIDEWALK.
2. ENGINEERING DESIGN OF THE MODIFIED CASE C TO BE APPROVED BY THE CITY ENGINEER.

FOR NOTES SEE SHEET ST 9.11

SCALE: NTS

CITY OF ALBANY, CALIFORNIA	STANDARD DETAIL	
APPROVED BY: Ray Chan DATE: DECEMBER 2015	CURB RAMP DETAILS (MODIFIED CASE C)	STD DETAIL No. ST 9.4

K:\Standard Specifications and details\Details\CAD Drawings\ST 9 Curb Ramp Details.dwg

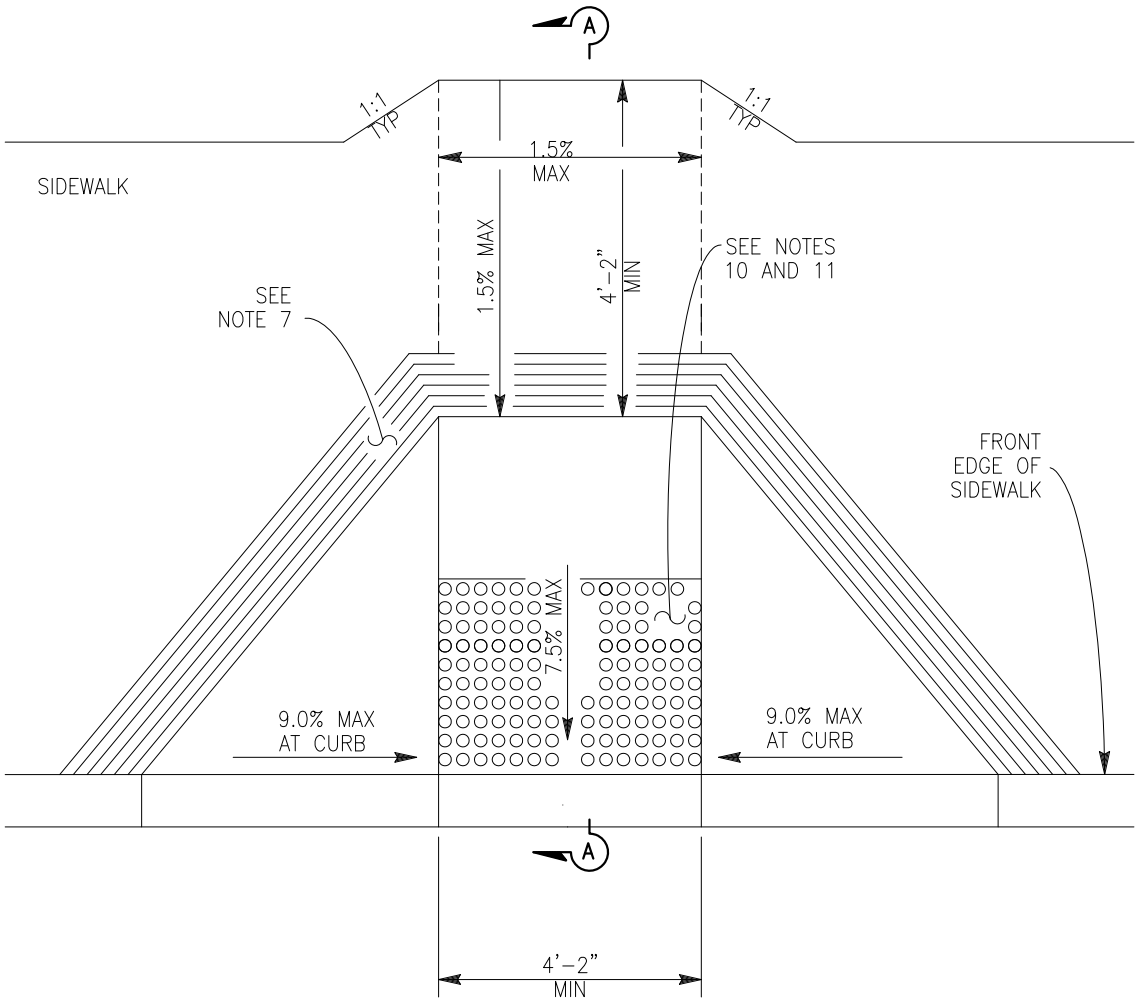

CASE D

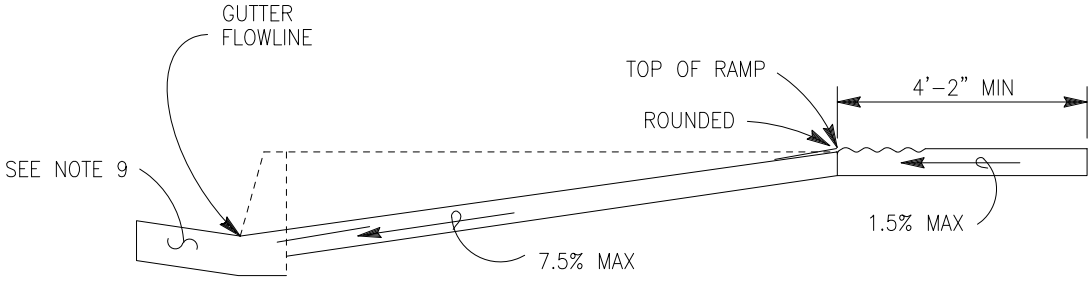

SECTION A-A

FOR NOTES SEE SHEET ST 9.11

SCALE: NTS

CITY OF ALBANY, CALIFORNIA		STANDARD DETAIL
APPROVED BY: Ray Chan DATE: DECEMBER 2015	CURB RAMP DETAILS (CASE D)	STD DETAIL No. ST 9.5

K:\Standard Specifications and details\Details\CAD Drawings\ST 9 Curb Ramp Details.dwg

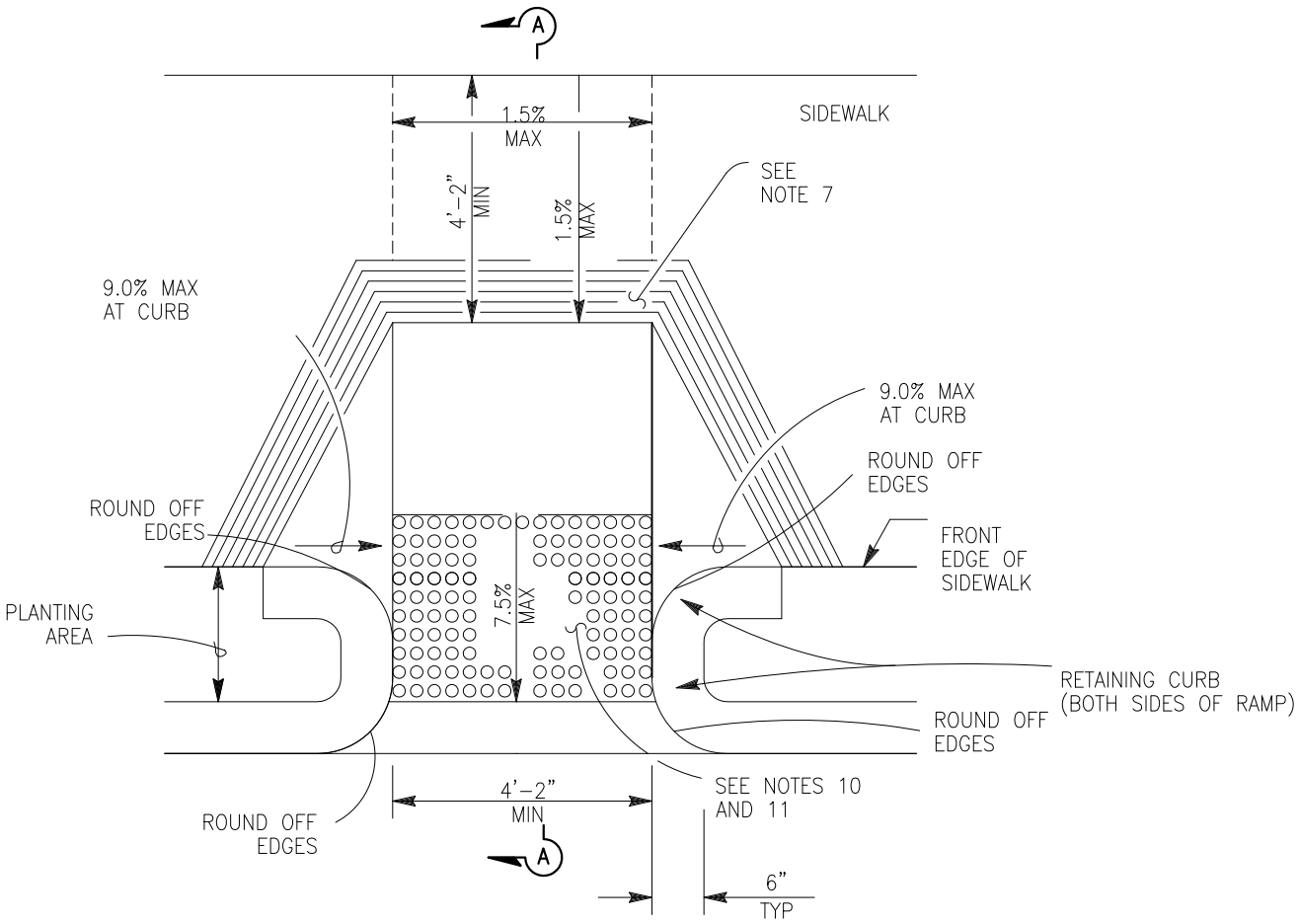

CASE E

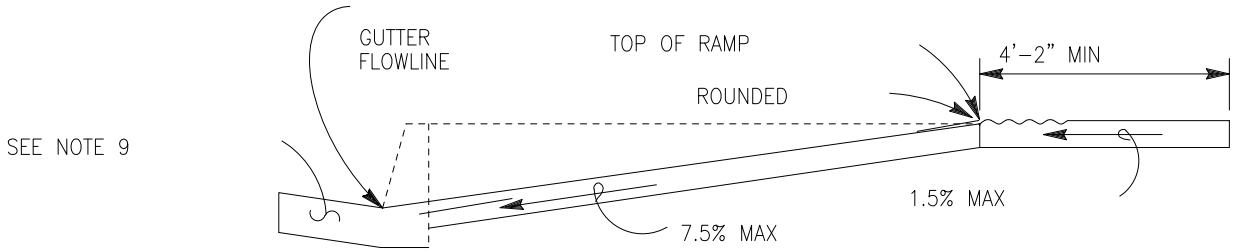

SECTION A-A

FOR NOTES SEE SHEET ST 9.11

SCALE: NTS

CITY OF ALBANY, CALIFORNIA	STANDARD DETAIL	
APPROVED BY: Ray Chan DATE: DECEMBER 2015	CURB RAMP DETAILS (CASE E)	STD DETAIL No. ST 9.6

K:\Standard Specifications and details\Details\CAD Drawings\ST 9 Curb Ramp Details.dwg

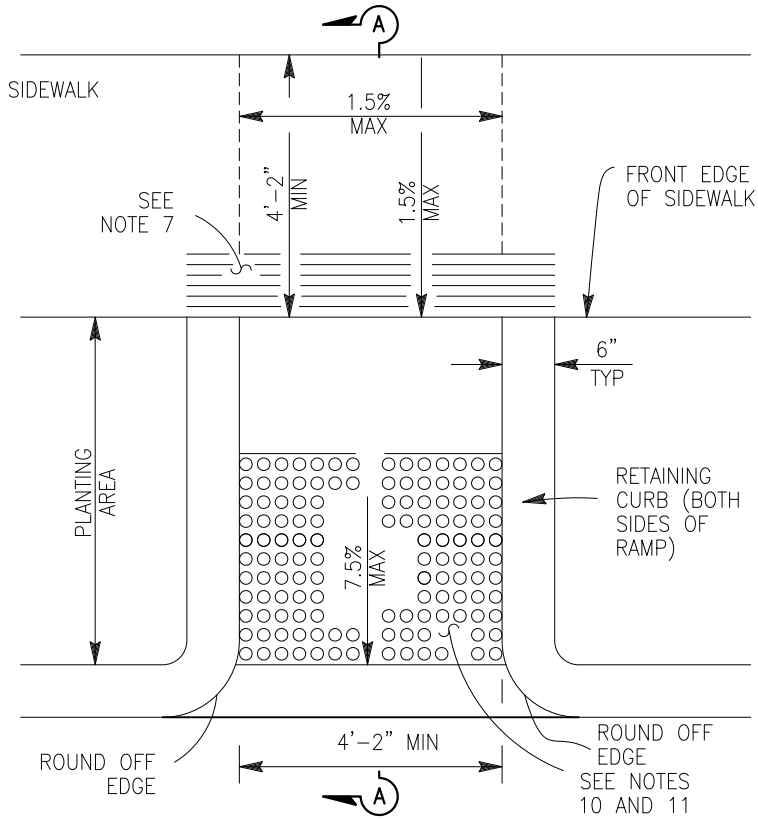

CASE F

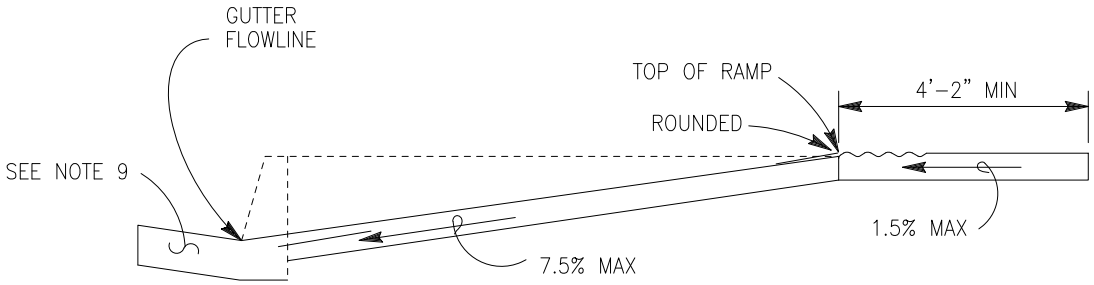

SECTION A-A

FOR NOTES SEE SHEET ST 9.11

SCALE: NTS

CITY OF ALBANY, CALIFORNIA	STANDARD DETAIL	
APPROVED BY: Ray Chan DATE: DECEMBER 2015	CURB RAMP DETAILS (CASE F)	STD DETAIL No. ST 9.7

K:\Standard Specifications and details\Details\CAD Drawings\ST 9 Curb Ramp Details.dwg

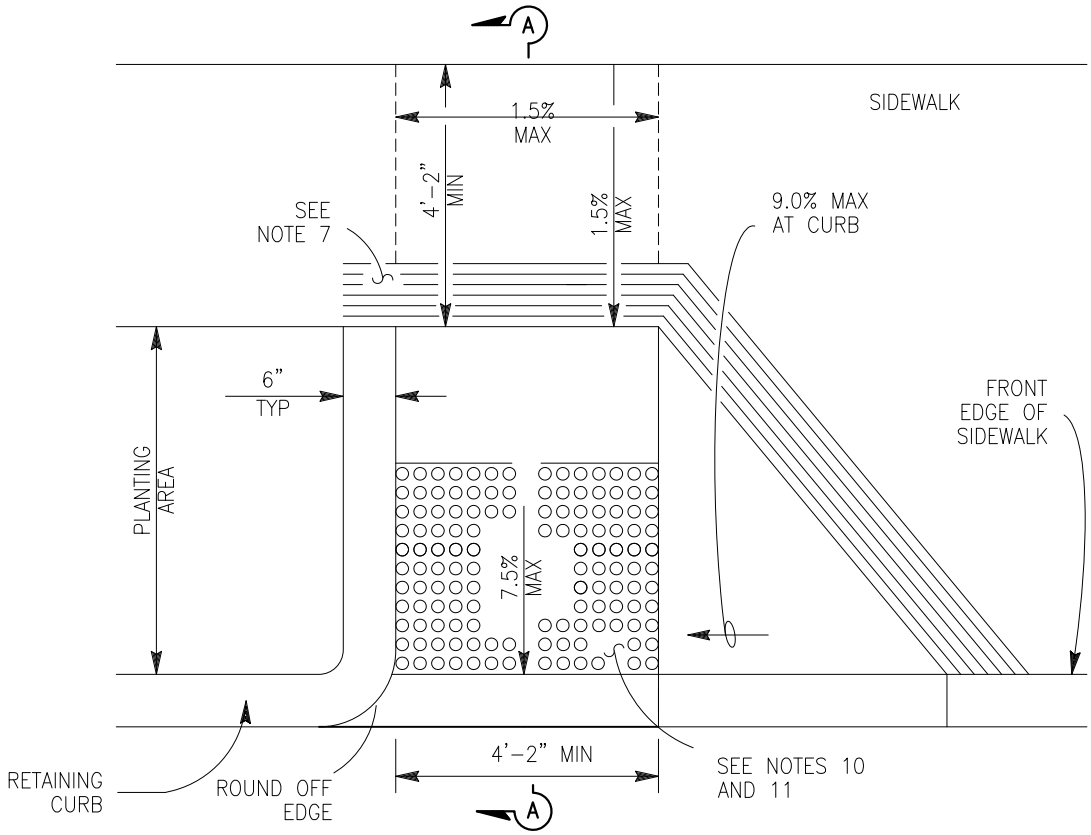

CASE G
SEE NOTE 4

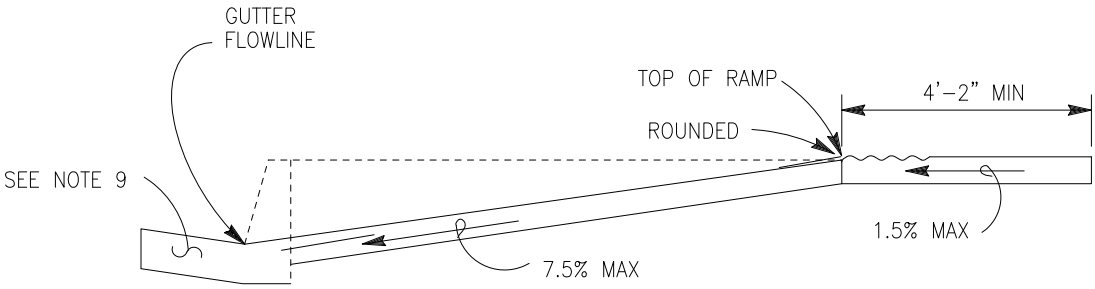

SECTION A-A

FOR NOTES SEE SHEET ST 9.11

SCALE: NTS

CITY OF ALBANY, CALIFORNIA	STANDARD DETAIL	
APPROVED BY: Ray Chan DATE: DECEMBER 2015	CURB RAMP DETAILS (CASE G)	STD DETAIL No. ST 9.8

K:\Standard Specifications and details\Details\CAD Drawings\ST 9 Curb Ramp Details.dwg

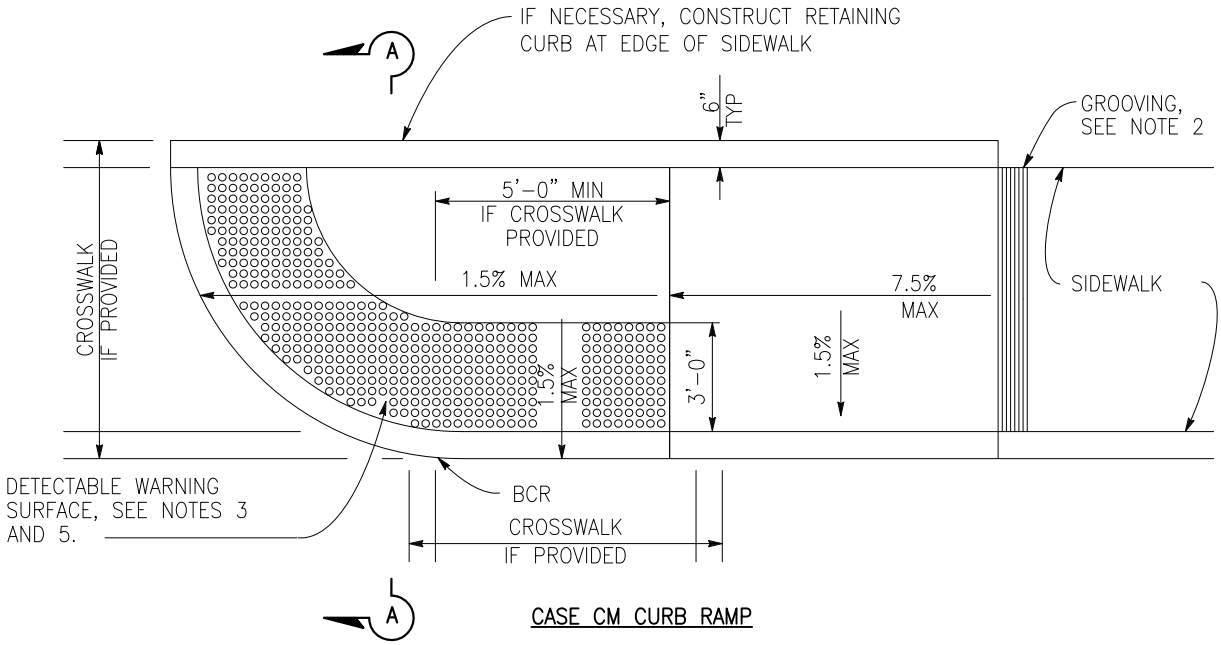

CASE CM CURB RAMP

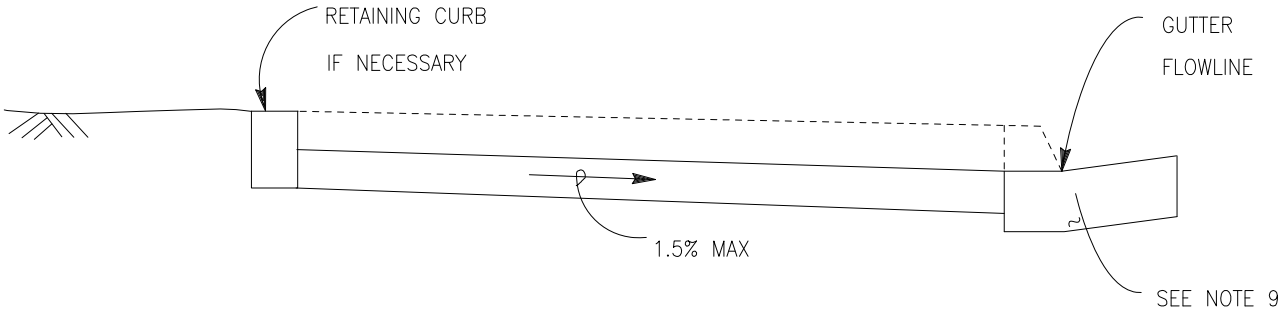

SECTION A–A

FOR NOTES SEE SHEET ST 9.11

SCALE: NTS

CITY OF ALBANY, CALIFORNIA	STANDARD DETAIL	
APPROVED BY: Ray Chan DATE: DECEMBER 2015	CURB RAMP DETAILS (CASE CM)	STD DETAIL No. ST 9.9

K:\Standard Specifications and details\Details\CAD Drawings\ST 9 Curb Ramp Details.dwg

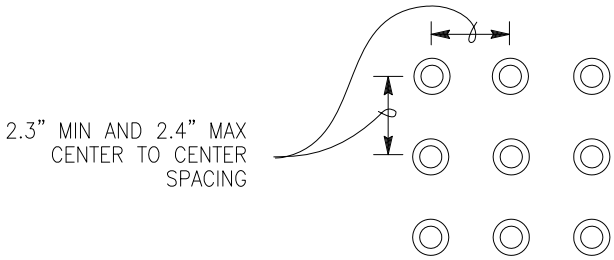

RAISED TRUNCATED DOME PATTERN (IN-LINE)
DETECTABLE WARNING SURFACE
SEE NOTE 10

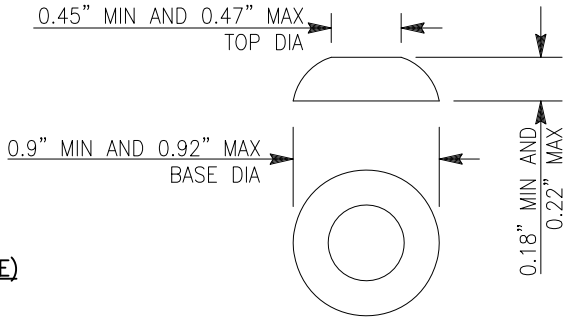

RAISED TRUNCATED DOME

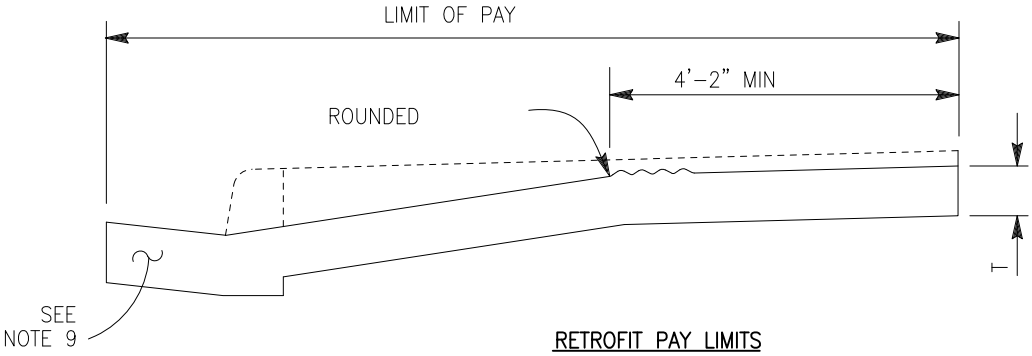

RETROFIT PAY LIMITS
EXISTING CURB AND SIDEWALK

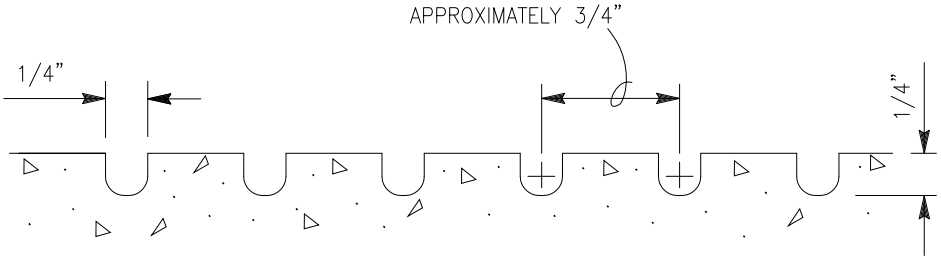

GROOVING DETAIL

FOR NOTES SEE SHEET ST 9.11

CITY OF ALBANY, CALIFORNIA		STANDARD DETAIL
APPROVED BY: Ray Chan DATE: DECEMBER 2015	CURB RAMP DETAILS - GROOVING AND DOMES	STD DETAIL No. ST 9.10

K:\Standard Specifications and details\Details\CAD Drawings\ST 9 Curb Ramp Details.dwg

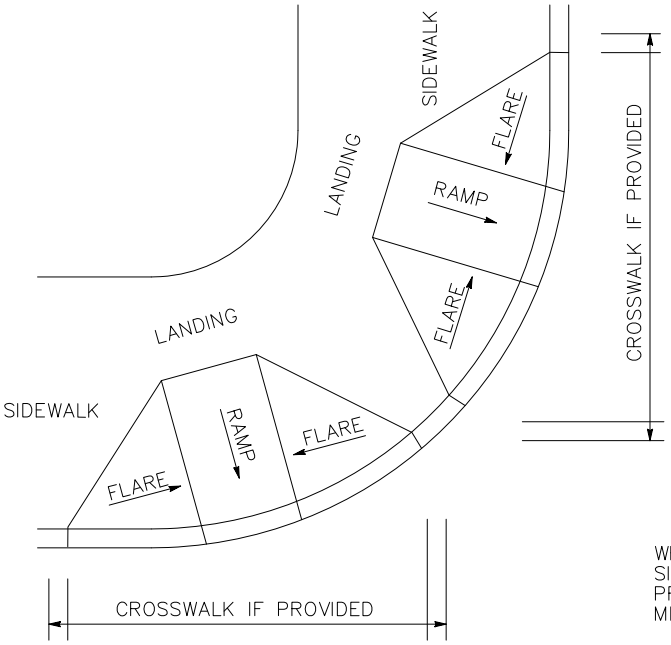

DETAIL A

TYPICAL TWO–RAMP CORNER INSTALLATION

SEE NOTE 1

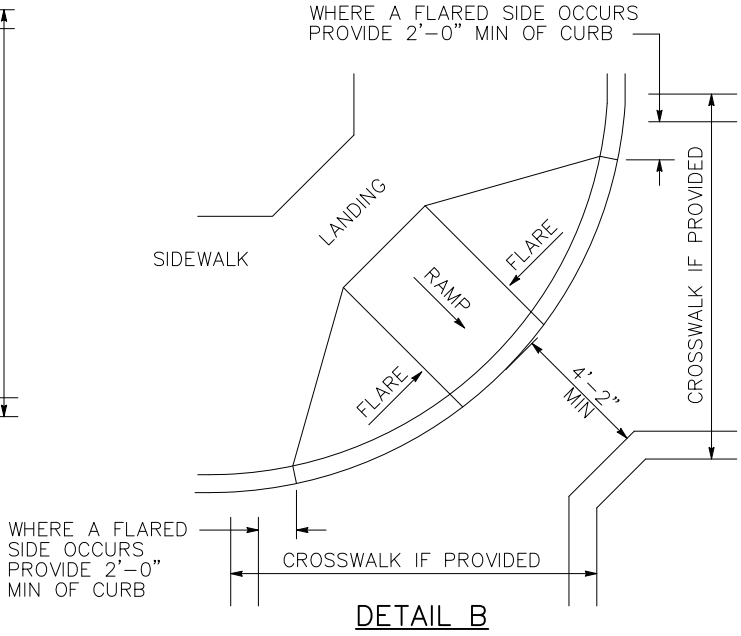

DETAIL B

TYPICAL ONE–RAMP CORNER INSTALLATION

SEE NOTES 1 AND 3

1. AS SITE CONDITIONS DICTATE, CASE A THROUGH CASE G CURB RAMPS MAY BE USED FOR CORNER INSTALLATIONS SIMILAR TO THOSE SHOWN IN DETAIL A AND DETAIL B. THE CASE OF CURB RAMPS USED IN DETAIL A DO NOT HAVE TO BE THE SAME. CASE A THROUGH CASE G CURB RAMPS ALSO MAY BE USED AT MID BLOCK LOCATIONS, AS SITE CONDITIONS DICTATE.
2. IF DISTANCE FROM CURB TO BACK OF SIDEWALK IS TOO SHORT TO ACCOMMODATE RAMP AND 4'–2" PLATFORM (LANDING) AS SHOWN IN CASE A, THE SIDEWALK MAY BE DEPRESSED LONGITUDINALLY AS IN CASE B, OR C OR MAY BE WIDENED AS IN CASE D.
3. WHEN RAMP IS LOCATED IN CENTER OF CURB RETURN, CROSSWALK CONFIGURATION MUST BE SIMILAR TO THAT SHOWN FOR DETAIL B.
4. AS SITE CONDITIONS DICTATE, THE RETAINING CURB SIDE AND THE FLARED SIDE OF THE CASE G RAMP SHALL BE CONSTRUCTED IN REVERSED POSITION.
5. IF LOCATED ON A CURVE, THE SIDES OF THE RAMP NEED NOT BE PARALLEL, BUT THE MINIMUM WIDTH OF THE RAMP SHALL BE 4'–2".
6. SIDE SLOPE OF RAMP FLARES VARY UNIFORMLY FROM A MAXIMUM OF 9.0% AT CURB TO CONFORM WITH LONGITUDINAL SIDEWALK SLOPE ADJACENT TO TOP OF THE RAMP, EXCEPT IN CASE C AND CASE F.
7. THE CURB RAMP SHALL BE OUTLINED, AS SHOWN, WITH A 1'–0" WIDE BORDER WITH," GROOVES APPROXIMATELY 3/4" ON CENTER. SEE GROOVING DETAIL.
8. TRANSITIONS FROM RAMPS AND LANDING TO WALKS, GUTTERS OR STREETS SHALL BE FLUSH (NO LIP) AND FREE OF ABRUPT CHANGES.
9. COUNTER SLOPES OF ADJOINING GUTTERS AND ROAD SURFACES IMMEDIATELY ADJACENT TO AND WITHIN 24 INCHES OF THE CURB RAMP SHALL NOT BE STEEPER THAN 1:20 (5.0%). GUTTER PAN SLOPE SHALL NOT EXCEED 1" OF DEPTH FOR EACH 2'–0" OF WIDTH.
10. CURB RAMPS SHALL HAVE A DETECTABLE WARNING SURFACE THAT EXTENDS THE FULL WIDTH AND 3'–0" DEPTH OF THE RAMP. A 4'–0" WIDE DETECTABLE WARNING SURFACE MAY BE USED ON A 4'–2" WIDE CURB RAMP. DETECTABLE WARNING SURFACES SHALL CONFORM TO THE REQUIREMENTS IN THE STANDARD SPECIFICATIONS.
11. THE EDGE OF THE DETECTABLE WARNING SURFACE NEAREST THE STREET SHALL BE BETWEEN 6" AND 8" FROM THE GUTTER FLOWLINE.
12. UTILITY PULL BOXES, MANHOLES, VAULTS AND ALL OTHER UTILITY FACILITIES WITHIN THE BOUNDARIES OF THE CURB RAMP WILL BE RELOCATED OR ADJUSTED TO GRADE BY THE OWNER PRIOR TO, OR IN CONJUNCTION WITH, CURB RAMP CONSTRUCTION.
13. DETECTABLE WARNING SURFACE MAY HAVE TO BE CUT TO ALLOW REMOVAL OF UTILITY COVERS WHILE MAINTAINING FULL DETECTABLE WARNING WIDTH AND DEPTH.

CITY OF ALBANY, CALIFORNIA		STANDARD DETAIL
APPROVED BY: Ray Chan DATE: DECEMBER 2015	CURB RAMP DETAILS (NOTES)	STD DETAIL No. ST 9.11

K:\Standard Specifications and details\Details\CAD Drawings\ST 9 Curb Ramp Details.dwg

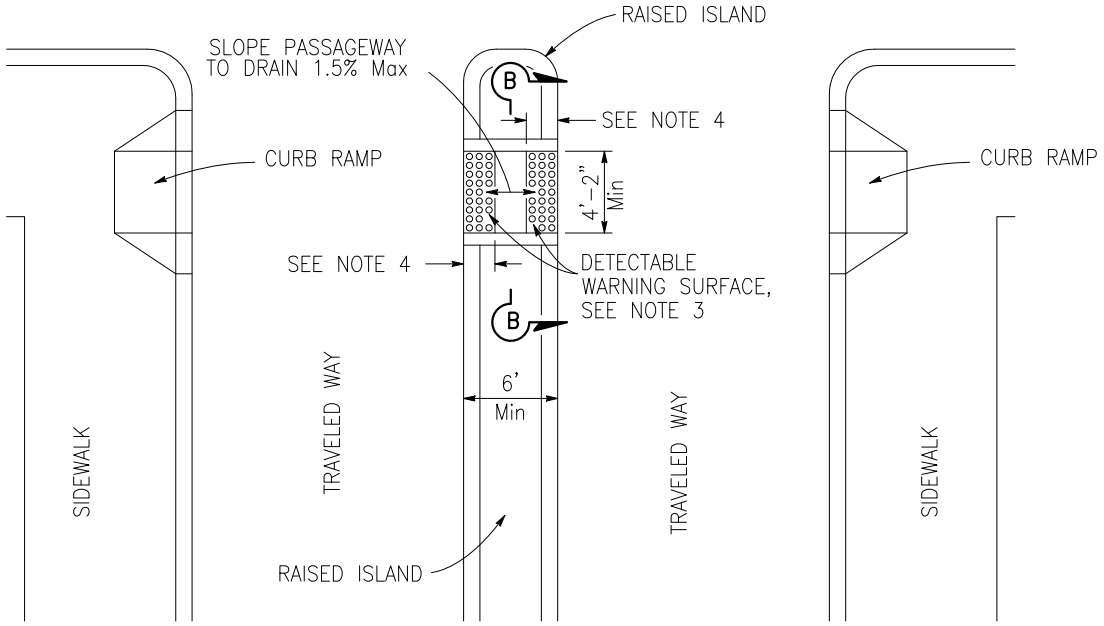

TYPE A PASSAGEWAY

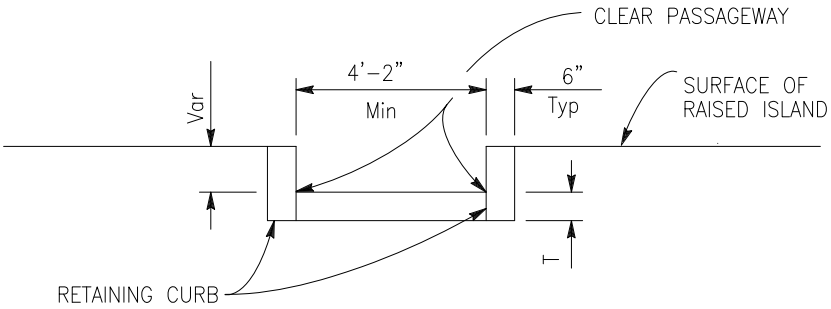

SECTION B-B

FOR NOTES SEE SHEET ST 10.4

SCALE: NTS

CITY OF ALBANY, CALIFORNIA	STANDARD DETAIL	
APPROVED BY: Ray Chan DATE: DECEMBER 2015	ISLAND PASSAGEWAY DETAILS (TYPE A)	STD DETAIL No. ST 10.1

K:\Standard Specifications and details\Details\CAD Drawings\ST 10 Island Passageway Details.dwg

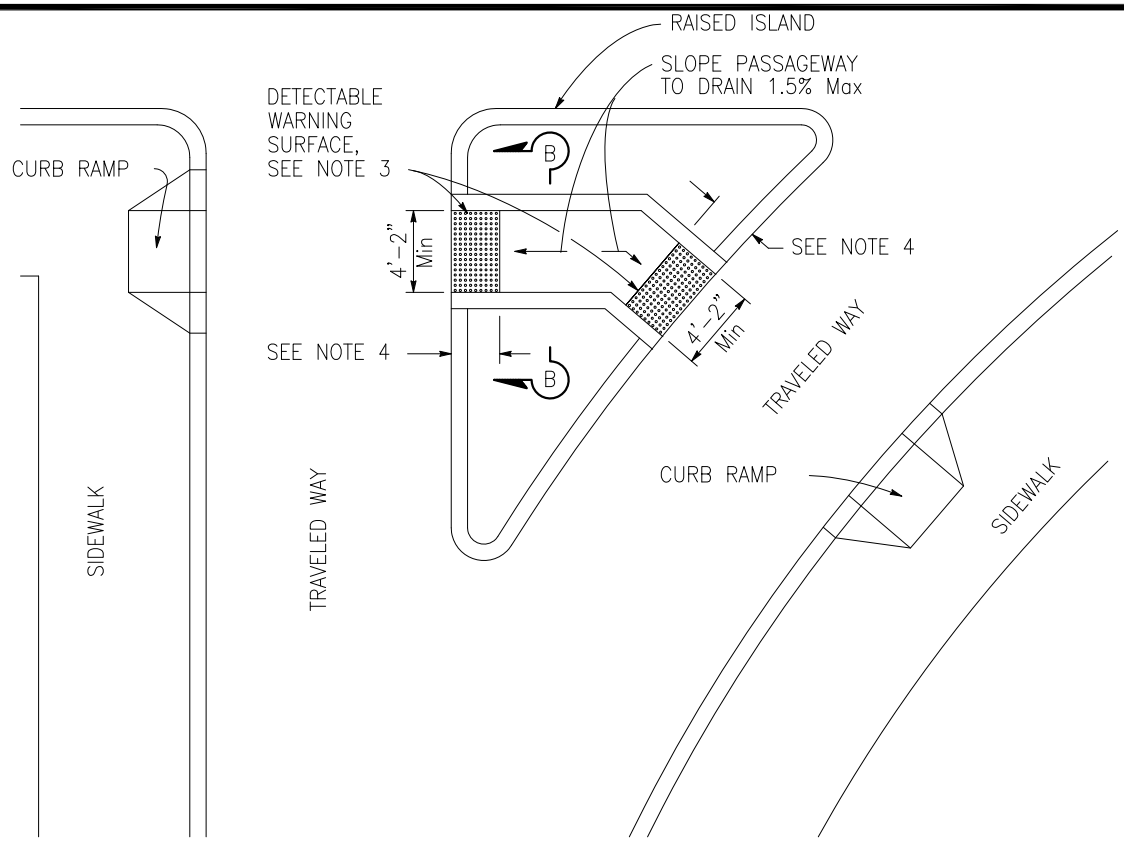

TYPE B PASSAGEWAY

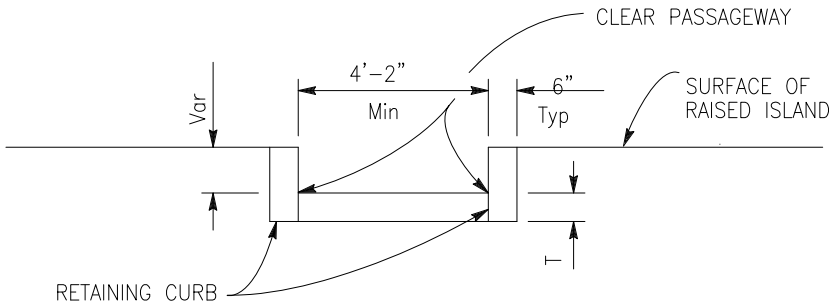

SECTION B-B

FOR NOTES SEE SHEET ST 10.4

SCALE: NTS

CITY OF ALBANY, CALIFORNIA	STANDARD DETAIL	
APPROVED BY: Ray Chan DATE: DECEMBER 2015	ISLAND PASSAGEWAY DETAILS (TYPE B)	STD DETAIL No. ST 10.2

K:\Standard Specifications and details\Details\CAD Drawings\ST 10 Island Passageway Details.dwg

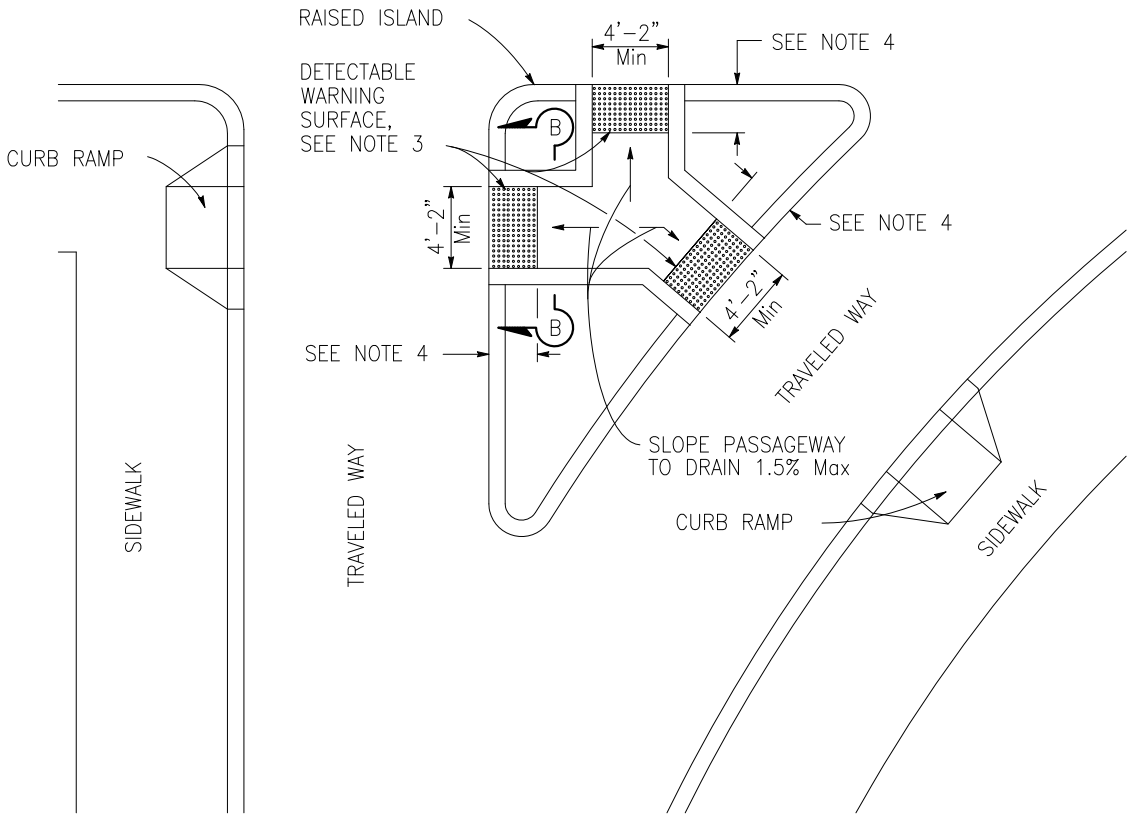

TYPE C PASSAGEWAY

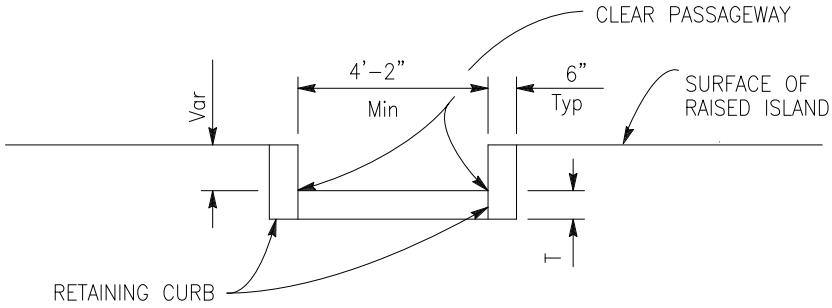

SECTION B-B

FOR NOTES SEE SHEET ST 10.4

SCALE: NTS

CITY OF ALBANY, CALIFORNIA		**STANDARD DETAIL**
APPROVED BY: Ray Chan DATE: DECEMBER 2015	**ISLAND PASSAGEWAY DETAILS (TYPE C)**	STD DETAIL No. **ST 10.3**

K:\Standard Specifications and details\Details\CAD Drawings\ST 10 Island Passageway Details.dwg

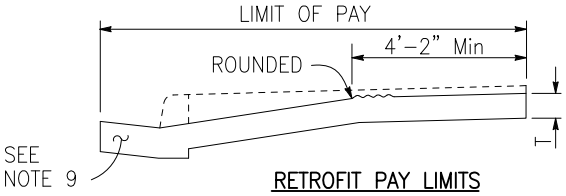

RETROFIT PAY LIMITS

Existing curb and sidewalk

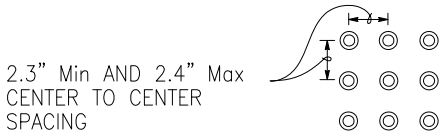

RAISED TRUNCATED DOME PATTERN (IN-LINE)

DETECTABLE WARNING SURFACE

See Note 10

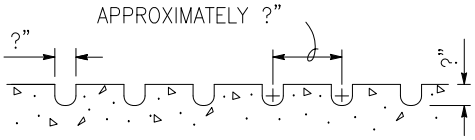

GROOVING DETAIL

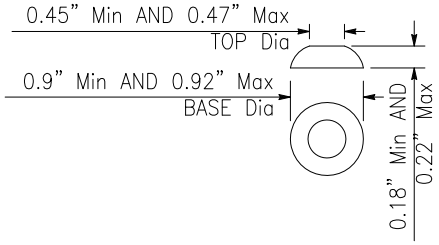

RAISED TRUNCATED DOME

NOTES:

1. SIDEWALK, RAMP AND PASSAGEWAY THICKNESS, "T", SHALL BE 3" MINIMUM.
2. FOR DETAILS OF GROOVING USED WITH CASE CM CURB RAMP, SEE STANDARD DETAIL ST 7A SHEET 8.
3. FOR DETAILS OF DETECTABLE WARNING SURFACES, SEE REVISED STANDARD DETAIL 7A.
4. WHERE AN ISLAND PASSAGEWAY LENGTH IS GREATER THAN OR EQUAL TO 6'-0", BUT LESS THAN 8'-0", EACH DETECTABLE WARNING SURFACE SHALL EXTEND THE FULL WIDTH AND 2'-0" DEPTH OF THE PASSAGEWAY LENGTH. WHERE AN ISLAND PASSAGEWAY LENGTH IS GREATER THAN OR EQUAL TO 8'-0", EACH DETECTABLE WARNING SURFACE SHALL EXTEND THE FULL WIDTH AND 3'-0" DEPTH OF THE PASSAGEWAY LENGTH. A 4'-0" WIDE DETECTABLE WARNING SURFACE MAY BE USED ON A 4'-2" WIDE ISLAND PASSAGEWAY.
5. FOR CASE CM CURB RAMP, THE EDGE OF THE DETECTABLE WARNING SURFACE NEAREST THE STREET SHALL BE BETWEEN 6" AND 8" FROM THE GUTTER FLOW LINE. REFER TO STANDARD DETAIL ST 7A, SHEET 8 FOR DETAILS.
6. TRANSITIONS FROM RAMPS TO WALKS, GUTTERS OR STREETS SHALL BE FLUSH (NO LIP) AND FREE OF ABRUPT CHANGES.
7. UTILITY PULL BOXES, MANHOLES, VAULTS AND ALL OTHER UTILITY FACILITIES WITHIN THE BOUNDARIES OF THE CURB RAMP WILL BE RELOCATED OR ADJUSTED TO GRADE BY THE OWNER PRIOR TO, OR IN CONJUNCTION WITH, CURB RAMP CONSTRUCTION.
8. DETECTABLE WARNING SURFACE MAY HAVE TO BE CUT TO ALLOW REMOVAL OF UTILITY COVERS WHILE MAINTAINING FULL DETECTABLE WARNING WIDTH AND DEPTH. FOR ADDITIONAL CURB RAMP DETAILS, SEE STANDARD DETAIL ST 7A.

CITY OF ALBANY, CALIFORNIA		STANDARD DETAIL
APPROVED BY: Ray Chan DATE: DECEMBER 2015	ISLAND PASSAGEWAY DETAILS AND NOTES	STD DETAIL No. ST 10.4

K:\Standard Specifications and details\Details\CAD Drawings\ST 10 Island Passageway Details.dwg

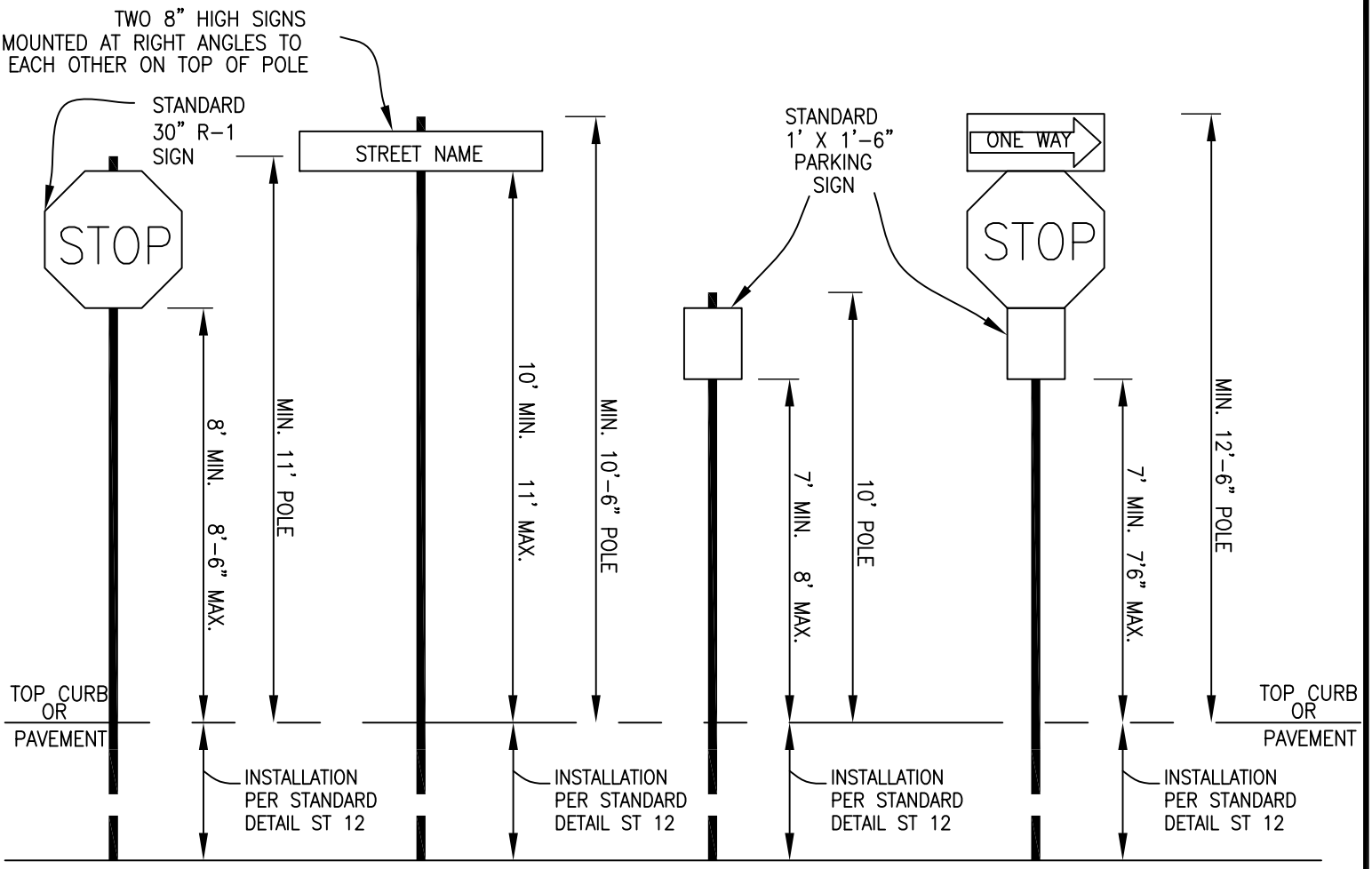

ALL OTHER SIGNS – MINIMUM 7' FROM GROUND LEVEL TO BOTTOM EDGE OF SIGN

ALL SIGNS TO BE MOUNTED ON UNISTRUT TELESPAR OR WESTERN HIGHWAY 1-3/4" SQUARE TUBULAR SIGN POLES. COLOR: POWDER FINISH DARK GREEN. POLES TO BE SECURED IN GROUND USING UNISTRUT TELESPAR OR WESTERN HIGHWAY SYSTEM. SIGNS TO BE ATTACHED TO POLES, AND POLES ATTACHED TO ANCHORS AND COLLARS, USING UNISTRUT OR WESTERN HIGHWAY PLATED STEEL OR ALUMINUM RIVETS.

SCALE: NTS

CITY OF ALBANY, CALIFORNIA	STANDARD DETAIL	
APPROVED BY: Ray Chan DATE: DECEMBER 2015	STREET & TRAFFIC SIGN MOUNTING STANDARDS	STD DETAIL No. ST 11

K:\Standard Specifications and details\Details\CAD Drawings\ST 11 Street & Traffic Sign Mounting Standards.dwg

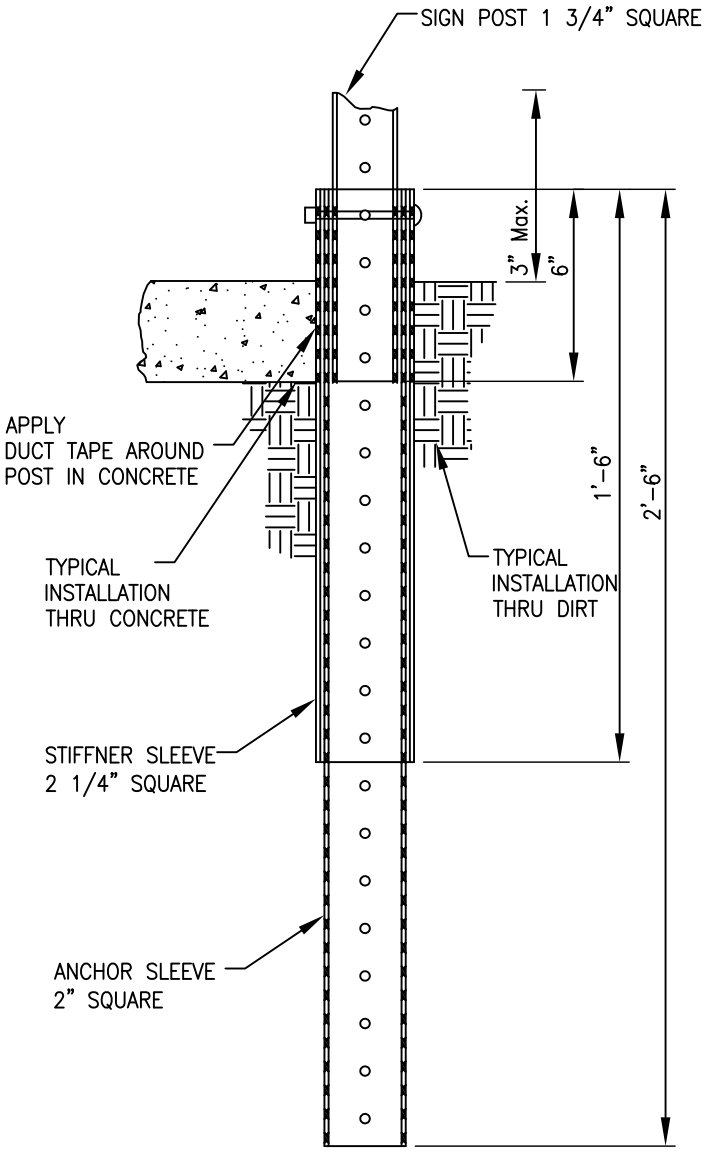

TYPICAL SECTION

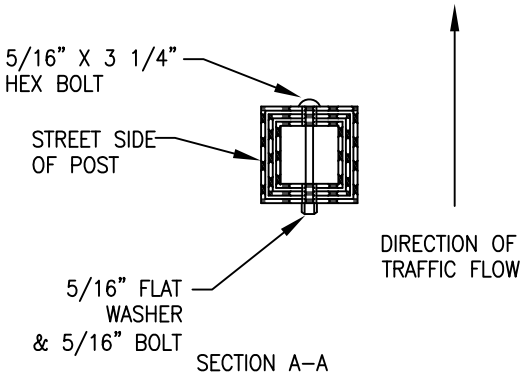

SECTION A–A

NOTE: ANCHOR SLEEVE + STIFFNER = ANCHOR ASSEMBLY

SCALE: NTS

CITY OF ALBANY, CALIFORNIA		STANDARD DETAIL
APPROVED BY: Ray Chan DATE: DECEMBER 2015	SIGN ANCHOR DETAIL	STD DETAIL No. ST 12

K:\Standard Specifications and details\Details\CAD Drawings\ST 12 Sign Anchor Detail.dwg

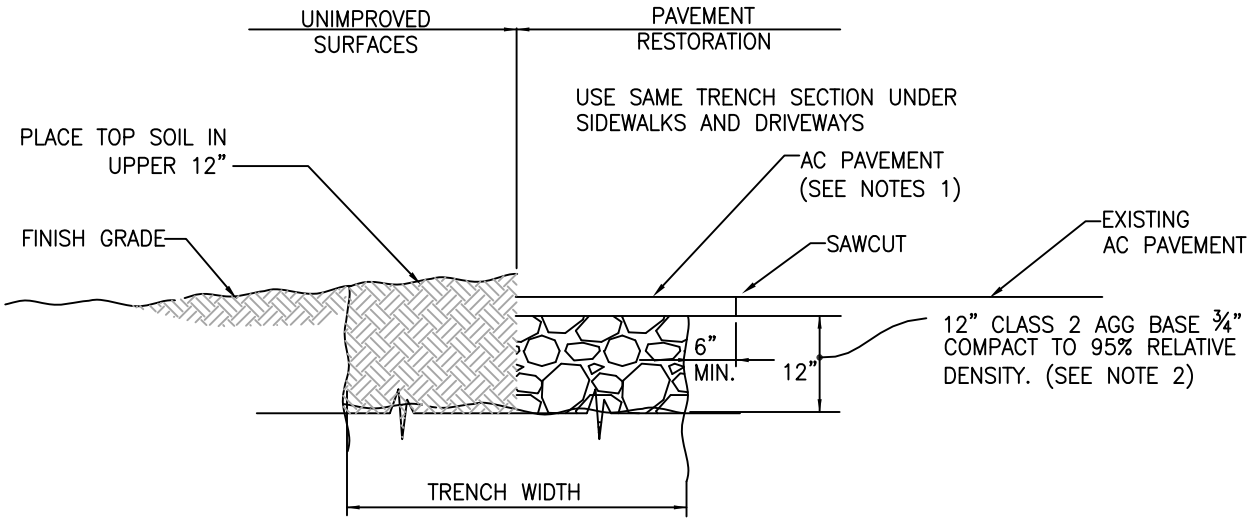

TRENCH SURFACE RESTORATION DETAIL

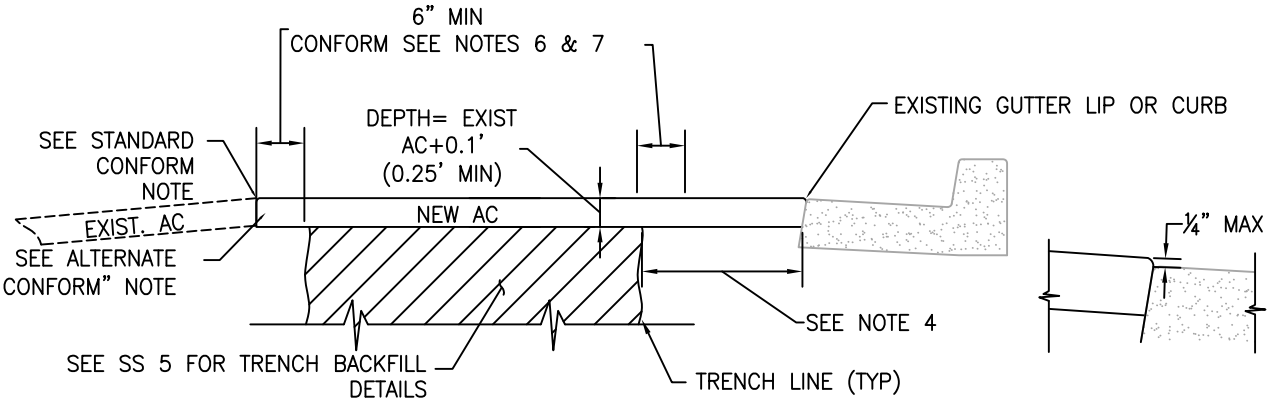

DETAIL AT GUTTER

DETAIL A
GUTTER LIP PAVING

NOTES:

1. MATCH EXISTING ASPHALT THICKNESS PLUS 1" (3" THICK MINIMUM).
2. WHEN APPROVED BY THE ENGINEER CDF MAY BE USED AS AN ALTERNATE FOR AGG BASE FOR SHALLOW PIPELINES PROVIDING MEASURES ARE TAKEN TO PREVENT PIPE FLOTATION.
3. THE FINAL LIFT OF AC IN STREETS SHALL BE COMPACTED WITH A ROLLER APPROVED BY THE ENGINEER.
4. WHEN THE TRENCH PARALLELS CURB AND THE NEAREST TRENCH LINE IS LESS THAN 2 FEET FROM THE GUTTER LIP OR CURB WHEN NO GUTTER EXISTS, ALL EXISTING ASPHALT CONCRETE SHALL BE REPLACED TO THE GUTTER LIP. FOR GUTTER LIP PAVING DETAIL SEE DETAIL "A".
5. ASPHALT CONCRETE SHALL BE ½" TYPE A ASPHALT CONCRETE UNLESS OTHERWISE SPECIFIED OR DIRECTED BY THE CITY ENGINEER.
6. THE ASPHALT CONCRETE SHALL BE CUT THROUGH THE FULL DEPTH OF EXISTING ASPHALT CONCRETE TO A NEAT STRAIGHT LINE AT LEAST 6" OUTSIDE THE TRENCH LINE. PAVEMENT EDGES DAMAGED DURING CONSTRUCTION SHALL BE RE-CUT TO NEAT LINES PRIOR TO PAVING. POINT BINDER (TACK COAT) SHALL BE APPLIED TO ALL VERTICAL SURFACES IN OCCORDANCE WITH THE LATEST EDITION OF CALTRANS STANDARD SPECIFICATIONS.
7. THE EXISTING ASPHALT CONCRETE OUTSIDE THE TRENCH LINE MAY BE GROUND TO A MINIMUM DEPTH OF 0.20 FEET TO A NEAT STRAIGHT LINE AT LEAST 6" OUTSIDE THE TRENCH LNE. THE EXISTING ASPHALT CONCRETE AT THE TRENCH LINES SHALL BE CUT THROUGH THE FULL DEPTH OF THE EXISTING ASPHALT CONCRETE TO A NEAT STRAIGHT LINE. ANY PAVEMENT EDGES, INCLUDING GROUND EDGES, DAMAGED DURING CONSTRUCTION SHALL BE RE-CUT OR RE-GROUND TO NEAT LINES PRIOR TO PAVING. POINT BINDER (TACT COAT) SHALL BE APPLIED TO ALL VERTICAL SURFACES IN OCCORDANCE WITH LATEST EDITION OF CALTRANS STANDARD SPECIFICATIONS.

SCALE: NTS

CITY OF ALBANY, CALIFORNIA		**STANDARD DETAIL**
APPROVED BY: Ray Chan DATE: DECEMBER 2015	**TRENCH SURFACE RESTORATION DETAIL**	STD DETAIL No. **ST 13**

K:\Standard Specifications and details\Details\CAD Drawings\ST 13 Trench Surface Restoration Detail.dwg

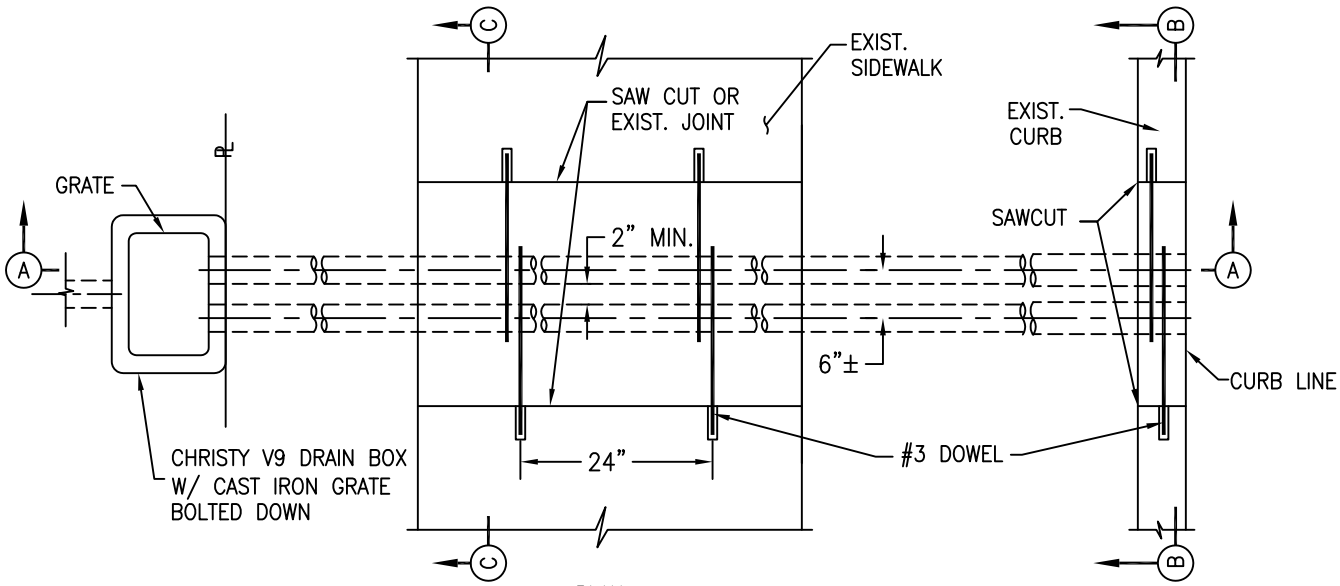

PLAN

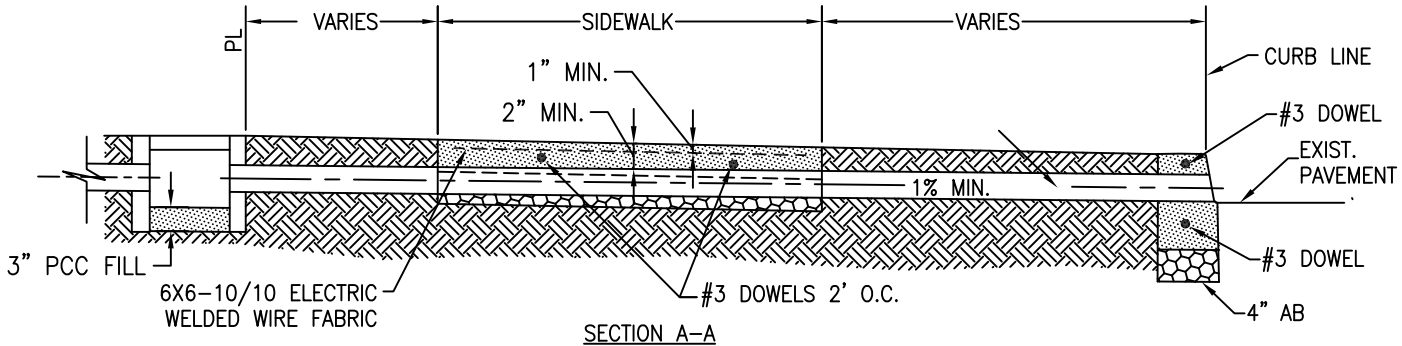

SECTION A–A

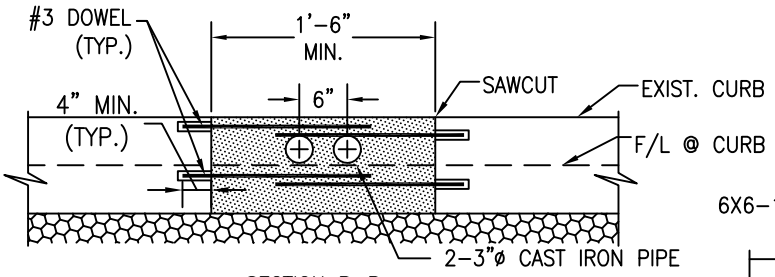

SECTION B–B

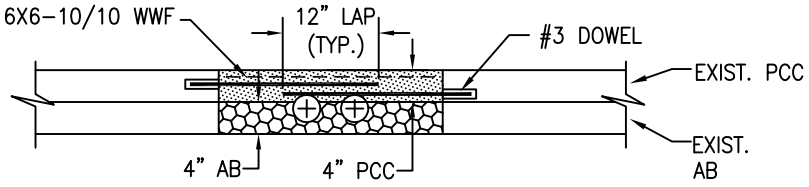

SECTION C–C

SCALE: NTS

CITY OF ALBANY, CALIFORNIA	STANDARD DETAIL	
APPROVED BY: Ray Chan DATE: DECEMBER 2015	SIDEWALK DRAIN RESIDENTIAL LOTS	STD DETAIL No. ST 14

K:\Standard Specifications and details\Details\CAD Drawings\ST 14 Sidewalk Drain Residential Lots.dwg

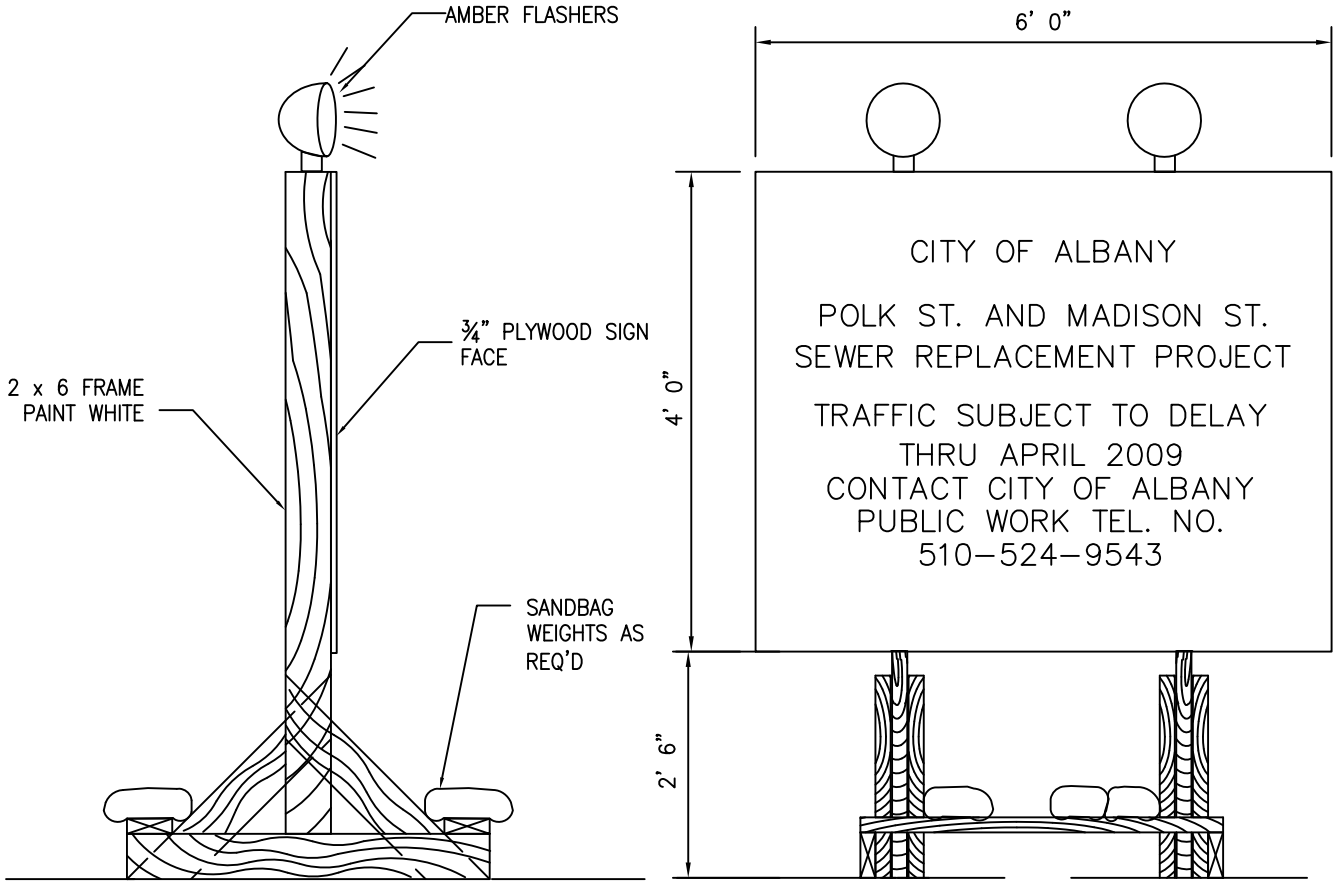

NOTES:

1. SIGNS SHALL HAVE SERIES D BLACK LETTERS ON REFLECTIVE WHITE BACKGROUND PLACE TYPE I SIGNS IN A VISIBLE LOCATION.
2. SIGN TO BE PLACED ON EITHER SIDE OF WORK AREA.
3. LOCATION OF SIGN SHALL BE AS APPROVED BY THE CITY ENGINEER.

SCALE: NTS

CITY OF ALBANY, CALIFORNIA	STANDARD DETAIL	
APPROVED BY: Ray Chan DATE: DECEMBER 2015	CONSTRUCTION WARNING SIGN	STD DETAIL No. ST 15

K:\Standard Specifications and details\Details\CAD Drawings\ST 15 Construction Warning Sign.dwg

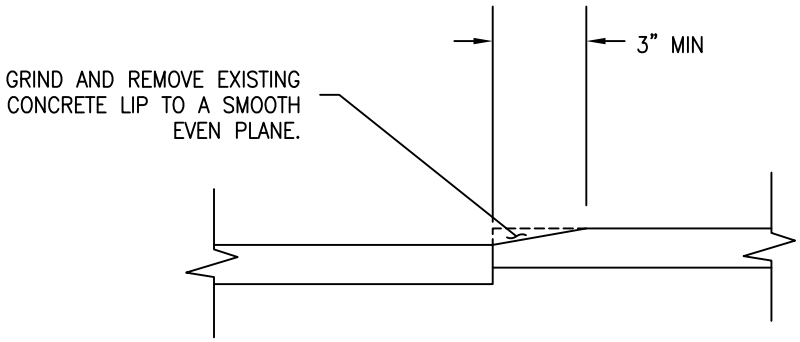

SIDEWALK ELEVATION VIEW

NOTES:

1. THE UNIT FOR PAYMENT SHALL BE INCH–FOOT (IN.–FT)
2. MEASUREMENT FOR PAYMENT SHALL BE MADE BY MULTIPLYING THE LENGTH OF THE CUT BY THE AVERAGE DEPTH OF THE CUT.
3. CUT SHALL EXTEND FOR FULL WIDTH OF SIDEWALK, EDGE TO EDGE
4. PROTECT CITIZENS AND ALL PRIVATE AND PUBLIC FACILITIES FROM DAMAGE OR HARM.
5. LEVEL AND RESHAPE EXISTING SOD AS NECESSARY.
6. SITE CLEAN–UP SHALL BE ACCOMPLISHED AS SOON AS SAWCUTTING OPERATION IS COMPLETE.
7. ONLY THOSE PANELS WHICH ARE IN GOOD CONDITION AND NOT SUBJECT TO REPLACEMENT IN ACCORDANCE WITH PLAN No. 291 (DEFECTIVE CONCRETE) OF THE APWA MANUAL OF STANDARD PLANS SHALL BE SAWCUT.

SCALE: NTS

CITY OF ALBANY, CALIFORNIA	STANDARD DETAIL	
APPROVED BY: Ray Chan DATE: DECEMBER 2015	SIDEWALK TRIP HAZARD REMOVAL	STD DETAIL No. ST 16

K:\Standard Specifications and details\Details\CAD Drawings\ST 16 Sidewalk Trip Hazard Removal.dwg

NPDES MEDELLION

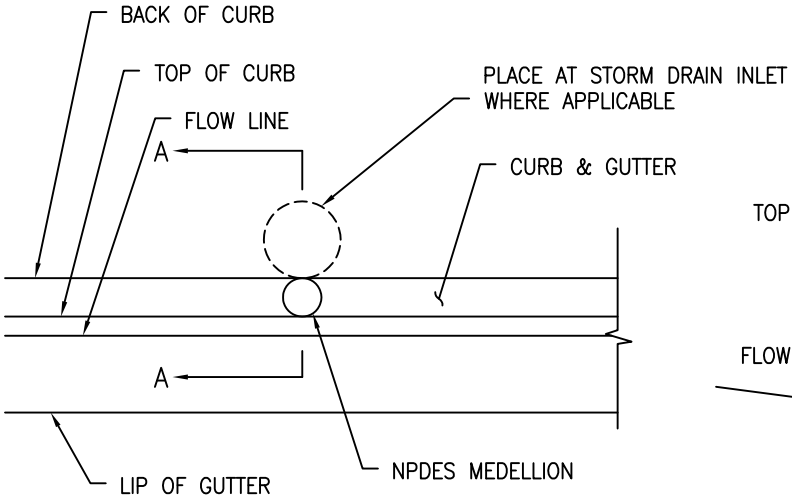

PLAN

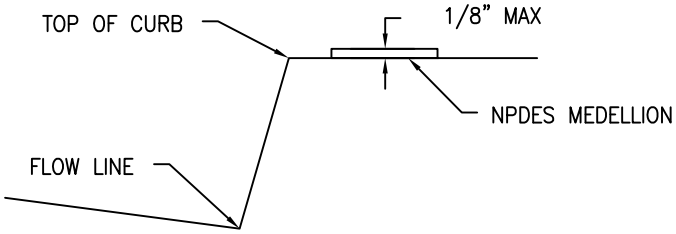

SECTION A–A

PLAN:

1. ORIENT MEDALLION TEXT TO BE READ FROM THE SIDEWALK. EPOXY MEDALLION WITH PREMIUM POLYURETHANE CONSTRUCTION ADHESIVE. ADHESIVE MUST DEVELOP FULL SRENGTH IN 24 HOURS OR LESS AND MEET ASTM C–557, DS498.

2. MEDALLION SHALL BE LOCATED BEHIND THE BACK OF CURB IN LOCATIONS WITH EXISTING OR PLANNED RED CURBS.

SCALE: NTS

CITY OF ALBANY, CALIFORNIA	STANDARD DETAIL	
APPROVED BY: Ray Chan DATE: DECEMBER 2015	NPDES MEDALLION	STD DETAIL No. ST 17

K:\Standard Specifications and details\Details\CAD Drawings\ST 17 NPDES Medallion.dwg

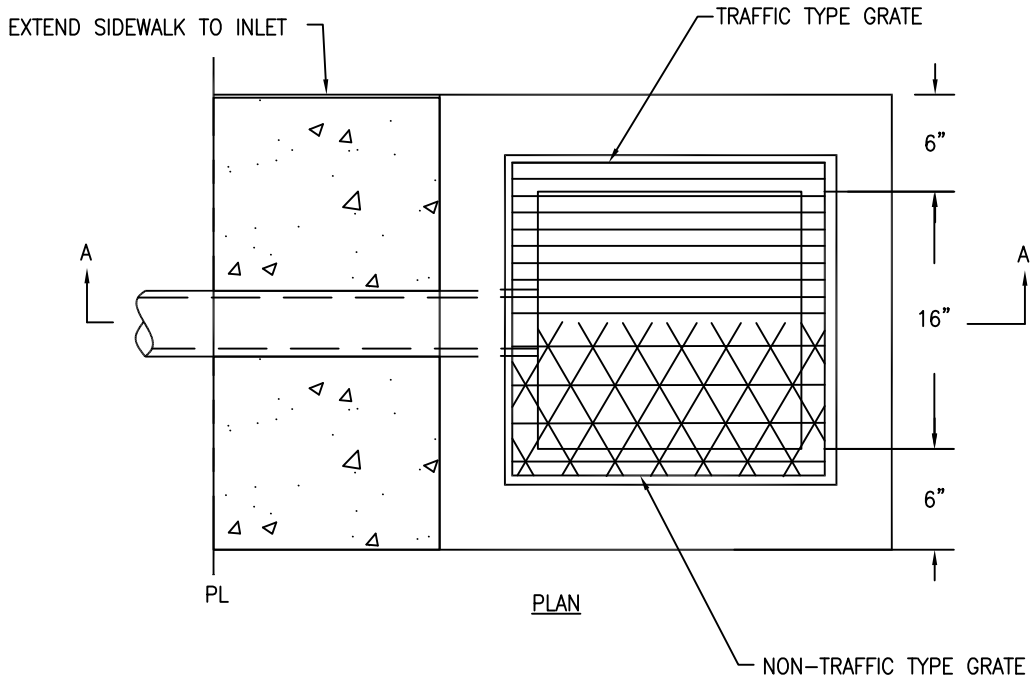

PLAN

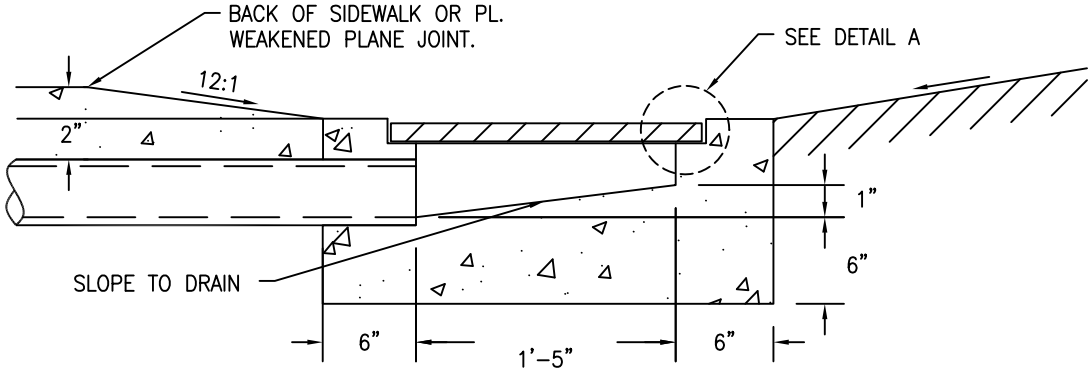

SECTION A-A

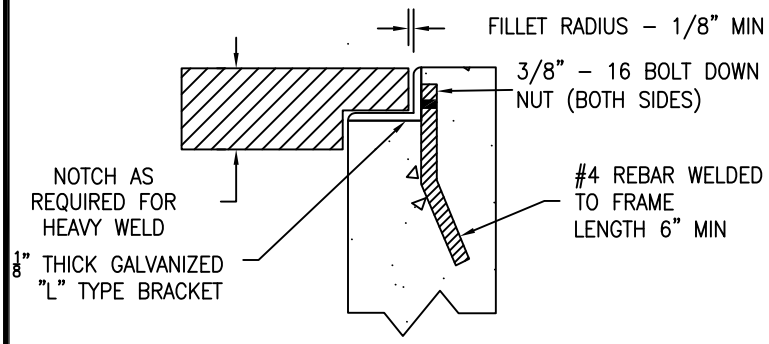

DETAIL A

NOTES

1. FOR ADDITIONAL CAPACITY, ADJACENT DRAINS MAY BE INSTALLED AND THE WIDTH OF INLET SHALL BE INCREASED AS REQUIRED. MINIMUM CLEAR DISTANCE BETWEEN DRAINS AT CURB FACE SHALL BE 6 INCHES.
2. ADJACENT DRAINS SHALL BE THE SAME TYPE
3. IN TRAFFIC AREAS, THE GRATE SHALL BE US CONCRETE PRECAST GROUP (CENTRAL PRECAST) HEAVY GRATE, OR APPROVED EQUAL.
4. IN NON-TRAFFIC AREAS THE GRATE SHALL BE US CONCRETE PRECAST GROUP (CENTRAL PRECAST) STANDARD GRATE, OR APPROVED EQUAL.
5. EACH GRATE SHALL BE PROVIDED WITH A MINIMUM OF TWO (2) LOCKING DEVICES.

SCALE: NTS

CITY OF ALBANY, CALIFORNIA	STANDARD DETAIL	
APPROVED BY: Ray Chan DATE: DECEMBER 2015	SIDEWALK CROSS DRAIN	STD DETAIL No. ST 18

K:\Standard Specifications and details\Details\CAD Drawings\ST 18 Sidewalk Cross Drain.dwg

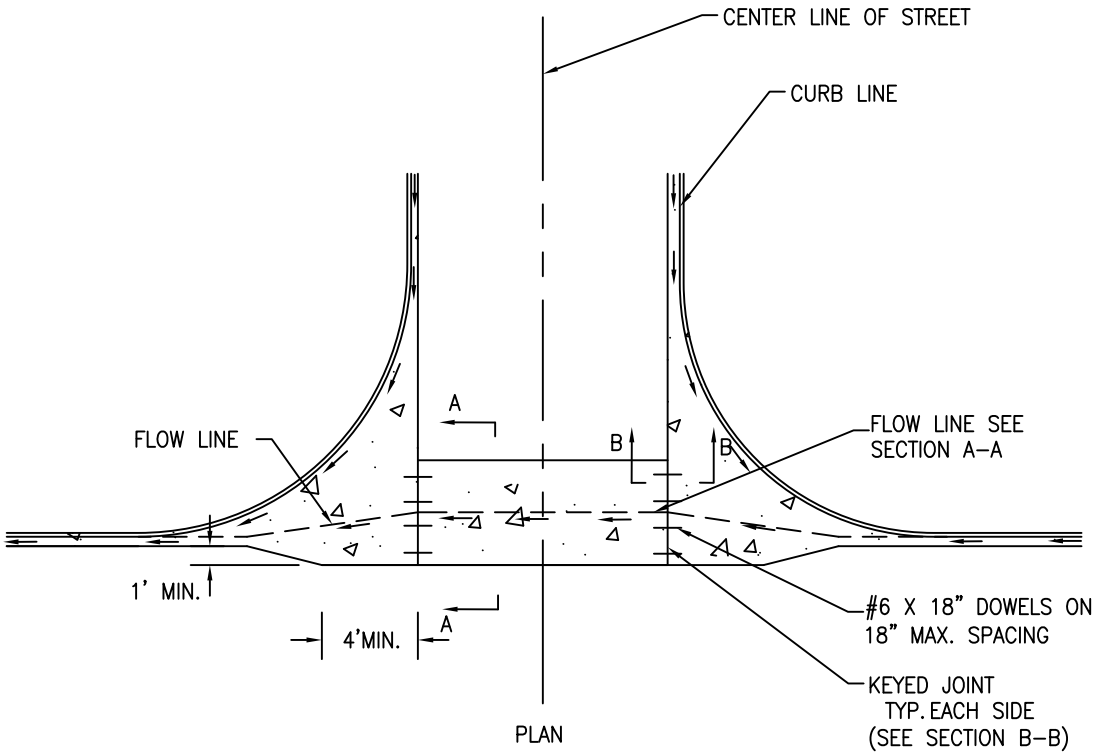

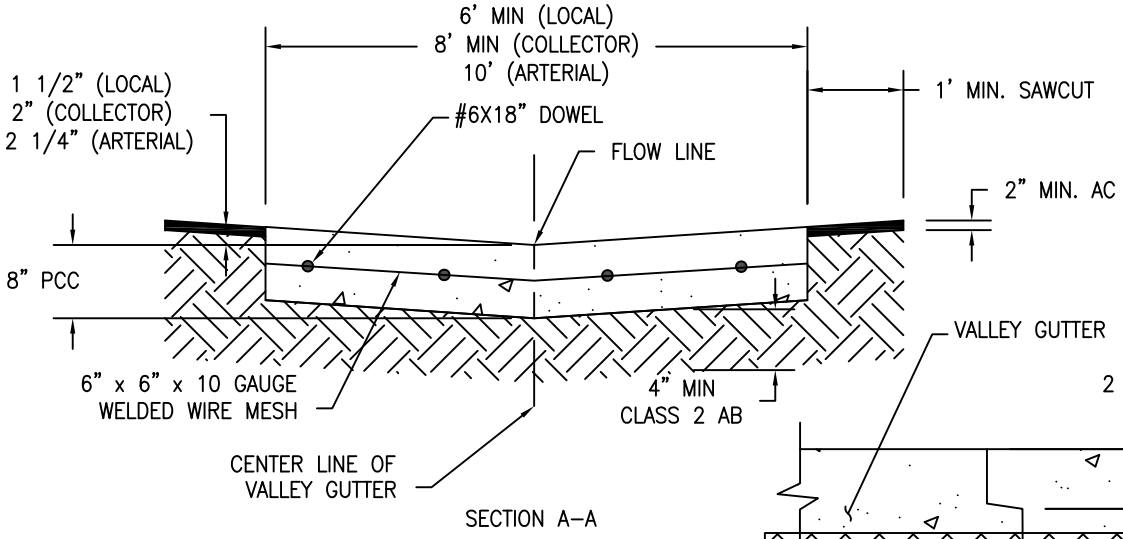

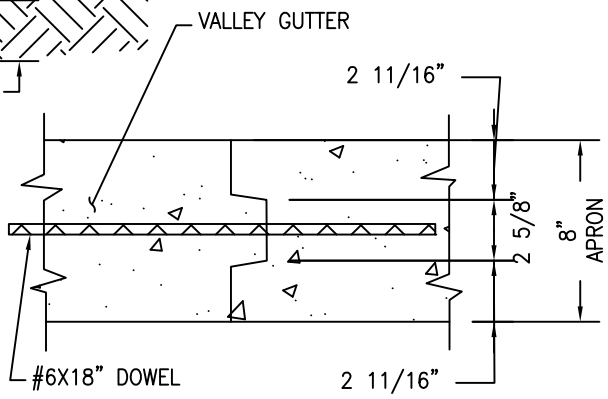

NOTES:

1. ALL NOTES AND DIMENSION SYSMETRICAL ABOUT CENTERLINE
2. PROVIDE A SMOOTH TRANSITION FROM VALLEY TO END OF RETURN.
3. ALL INTERSECTIONS TO HAVE ACCESS RAMPS DESIGNED IN ACCORDANCE WITH ADA STANDARDS

SCALE: NTS

CITY OF ALBANY, CALIFORNIA	STANDARD DETAIL	
APPROVED BY: Ray Chan DATE: DECEMBER 2015	CONCRETE VALLEY GUTTER AND APRON	STD DETAIL No. ST 19

K:\Standard Specifications and details\Details\CAD Drawings\ST 19 Conc Valley Gutter and Apron.dwg

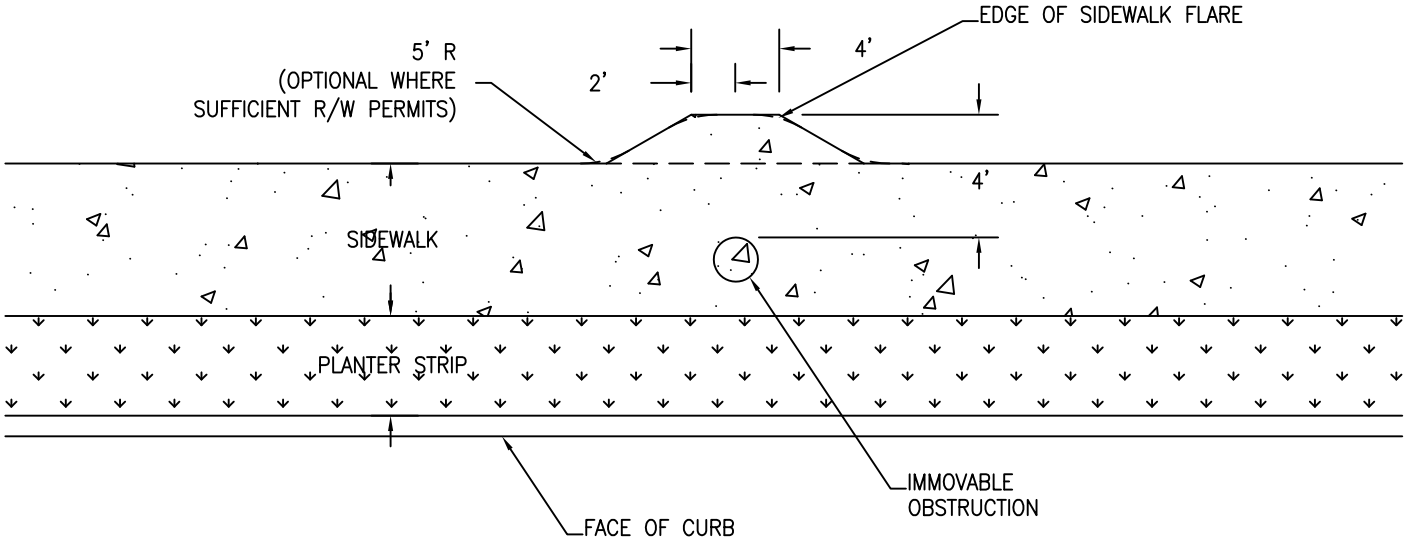

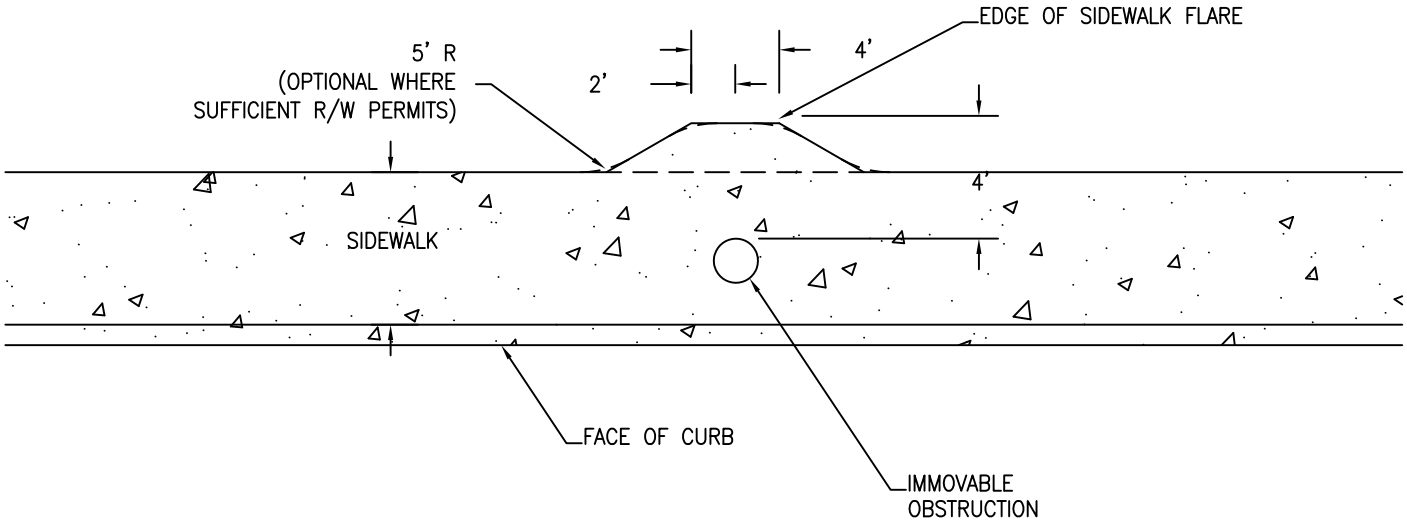

NOTES:

1. RELOCATE SIDEWALK OBSTRUCTIONS BEHIND THE SIDEWALK AREA WITHIN A PUBLIC SERVICE EASEMENT
2. WHEN OBSTRUCTIONS CANNOT BE MOVED AND A 3-FOOT CLEAR AREA BETWEEN AN OBSTRUCTION AND THE EDGE OF SIDEWALK IS NOT AVAILABLE, A RETROFIT SIDEWALK FLARE MAY BE USED. FLARE CONSTRUCTION SHALL CONFORM TO STANDARD CITY SIDEWALK REQUIREMENTS.
3. USE OF THE SIDEWALK FLARE DETAIL SHALL BE APPROVED BY THE CITY ENGINEER FOR SPECIAL RETROFIT SITUATIONS ONLY. THIS DETAIL WILL NOT BE ALLOWED AS A CORRECTION IMPROPERLY PLACED FACILITIES.

SCALE: NTS

CITY OF ALBANY, CALIFORNIA	STANDARD DETAIL	
APPROVED BY: Ray Chan DATE: DECEMBER 2015	RETROFIT SIDEWALK FLARE FOR OBSTRUCTIONS	STD DETAIL No. ST 20

K:\Standard Specifications and details\Details\CAD Drawings\ST 20 Retrofit Sidewalk Flare for Obstructions.dwg

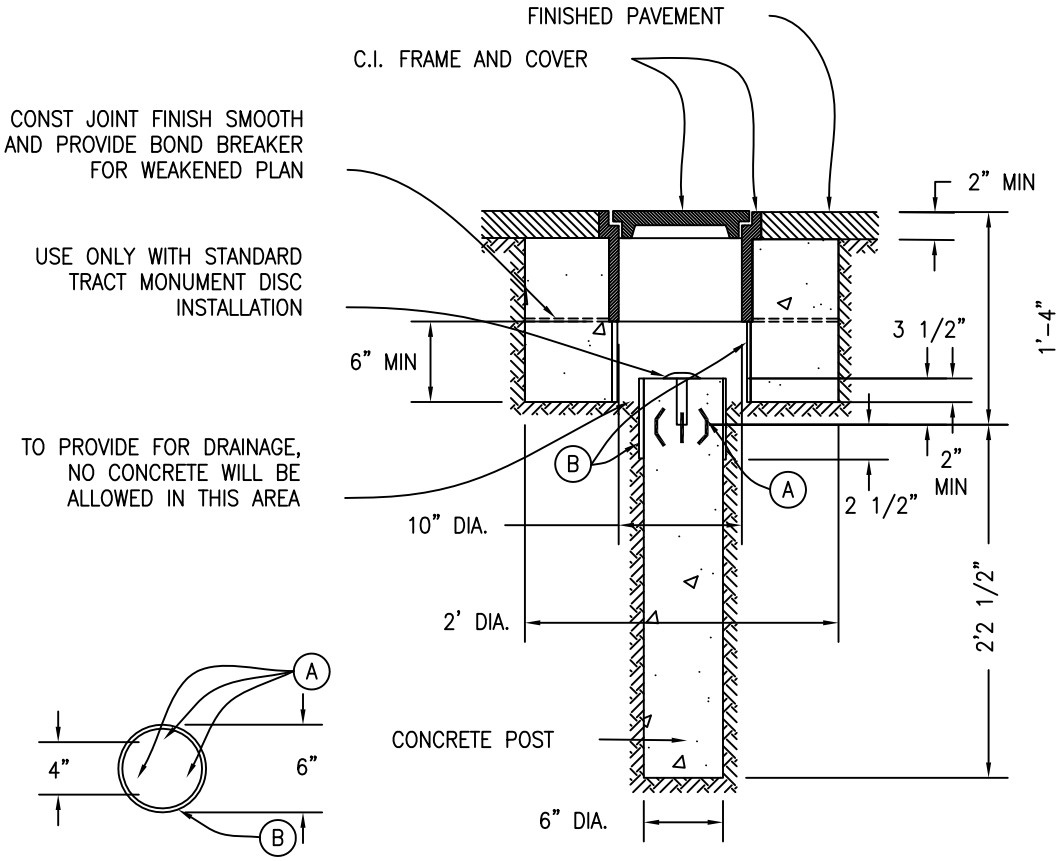

NOTES:

MONUMENT FRAMES AND COVERS SHALL BE:

1. NEENAH FOUNDRY COMPANY, CATALOG NO. R-1975-B, LID TYPE C WITHMONUMENT ON THE LID.
2. CHRISP CASTING PERT NO. 9279, +277M
3. OTHER MANUFACTURERS MODELS APPROVED BY THE CITY OF ALBANY DEPARTMENT OF PUBLIC WORKS SHALL BE EQUAL IN SERVICE AND FUNCTION. EACH COVER SHALL BE GROUND OR OTHERWISE FINISHED SO THAT IT WILL FIT IN ITS FRAME WITHOT ROCKING. CONCRETE SHALL BE EITHER CLASS A OR CLASS B, POURED IN PLACE AGAINST THE EXISTING GROUND.

(A) INSTALL 3 OR MORE 1/4" X 3" METAL DOWELS EXTENDING 1' ABOVE SURFACE OF CONCRETE. BEND AS SHOWN.

(B) PROVIDE A FORM OF SHEET METAL OR 3/32" THICK WAX-IMPREGNATED PAPER.

SCALE: NTS

CITY OF ALBANY, CALIFORNIA	STANDARD DETAIL	
APPROVED BY: Ray Chan DATE: DECEMBER 2015	CONCRETE MONUMENT SECTION WITH DISC	STD DETAIL No. ST 21

K:\Standard Specifications and details\Details\CAD Drawings\ST 21 Concrete Monument Section with Disc.dwg

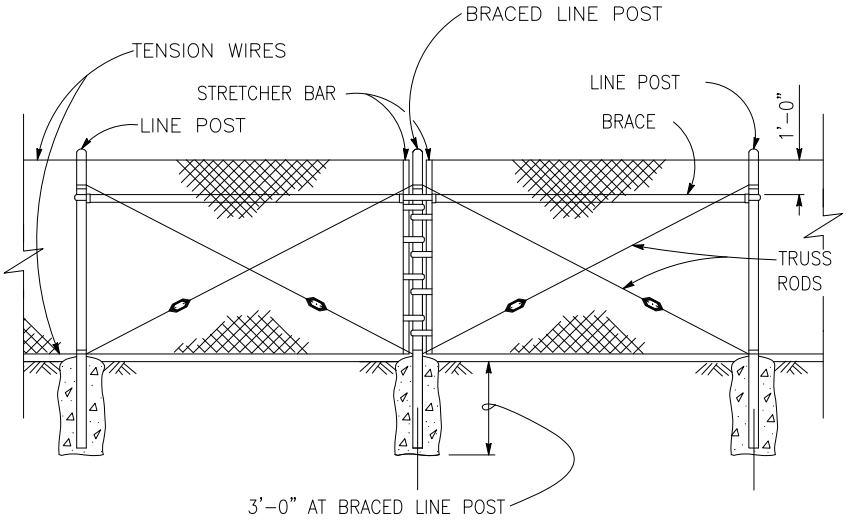

BRACED LINE POST INSTALLATION
BRACED LINE POST AT INTERVALS NOT EXCEEDING 1000'

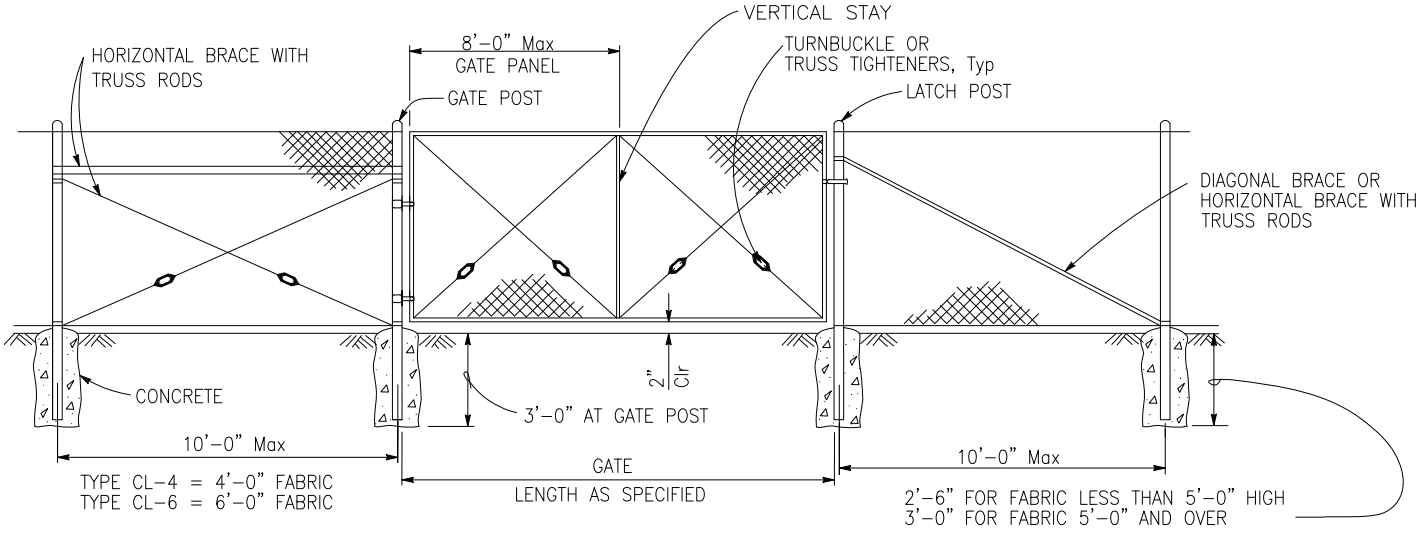

CHAIN LINK GATE INSTALLATION

NOTES AND SCHEDULE ON SHEET 2

SCALE: NTS

CITY OF ALBANY, CALIFORNIA		**STANDARD DETAIL**
APPROVED BY: Ray Chan DATE: DECEMBER 2015	**CHAIN LINK FENCE AND GATE**	STD DETAIL No. **ST 22.1**

K:\Standard Specifications and details\Details\CAD Drawings\ST 22 Chain Link Fence and Gate.dwg

GATE POST			
FENCE HEIGHT	GATE WIDTHS	ROUND OD PIPE	WEIGHT (lb/ft)
6'–0" AND LESS	UP THRU 6'–0"	2.875"	5.80
	OVER 6'–0" THRU 12'–0"	4.500"	10.80
	OVER 12'–0" THRU 18'–0"	5.563"	14.63
	OVER 18'–0" TO 24'–0" Max	6.625"	18.99
OVER 6'–0" TO 8'–0" Max	UP THRU 6'–0"	3.500"	7.58
	OVER 6'–0" THRU 12'–0"	5.563"	14.63
	OVER 12'–0" THRU 18'–0"	6.625"	18.99
	OVER 18'–0" TO 24'–0" Max	8.625"	28.58

ABOVE POST DIMENSIONS AND WEIGHTS ARE MINIMUMS.
LARGER SIZES MAY BE USED UPON APPROVAL.

TYPICAL MEMBER DIMENSIONS (See Notes)										
FENCE HEIGHT	LINE POSTS				END, LATCH AND CORNER POSTS		BRACES			
	ROUND OD PIPE	WEIGHT (lb/ft)	ROLL FORMED		ROUND OD PIPE	WEIGHT (lb/ft)	ROUND OD PIPE	WEIGHT (lb/ft)	ROLL FORMED	
			SECTION	WEIGHT (lb/ft)					SECTION	WEIGHT (lb/ft)
6'–0" AND LESS	1.900"	2.72	1.875" x 1.625"	1.85	2.375"	3.65	1.66"	2.27	1.625" x 1.25"	1.35
OVER 6'–0" TO 8'–0" Max	2.375"	3.65	2.25" x 1.70"	2.78	2.875"	5.80	1.66"	2.27	1.625" x 1.25"	1.35

NOTES:

1. THE TABLE BELOW SHOWS MINIMUM SIZED POSTS AND BRACES COMPLYING WITH THE SPECIFICATIONS. LARGER OR HEAVIER POST AND BRACE SIZES MAY BE USED UPON APPROVAL
2. SECTIONS SHOWN IN THE TABLES MUST ALSO COMPLY WITH THE STRENGTH REQUIREMENTS AND OTHER PROVISIONS OF THE SPECIFICATIONS.
3. OTHER SECTIONS WHICH COMPLY WITH THE STRENGTH REQUIREMENTS AND OTHER PROVISIONS OF THE SPECIFICATIONS MAY BE USED UPON APPROVAL.
4. OPTIONS EXERCISED SHALL BE UNIFORM ON ANY ONE PROJECT.
5. OFFSET TO BE 2'–0" AT MONUMENT LOCATIONS, MEASURED AT RIGHT ANGLES TO R/W LINES. TAPER TO ACHIEVE OFFSET TO BE AT LEAST 20'–0" LONG.
6. SEE REVISED STANDARD PLAN RSP A85B FOR BRACE, STRETCHER BAR, AND TRUSS TIGHTENER DETAILS.

SCALE: NTS

CITY OF ALBANY, CALIFORNIA **STANDARD DETAIL**

APPROVED BY: Ray Chan

DATE: DECEMBER 2015

CHAIN LINK FENCE AND GATE - NOTES

STD DETAIL No. **ST 22.2**

K:\Standard Specifications and details\Details\CAD Drawings\ST 22 Chain Link Fence and Gate.dwg

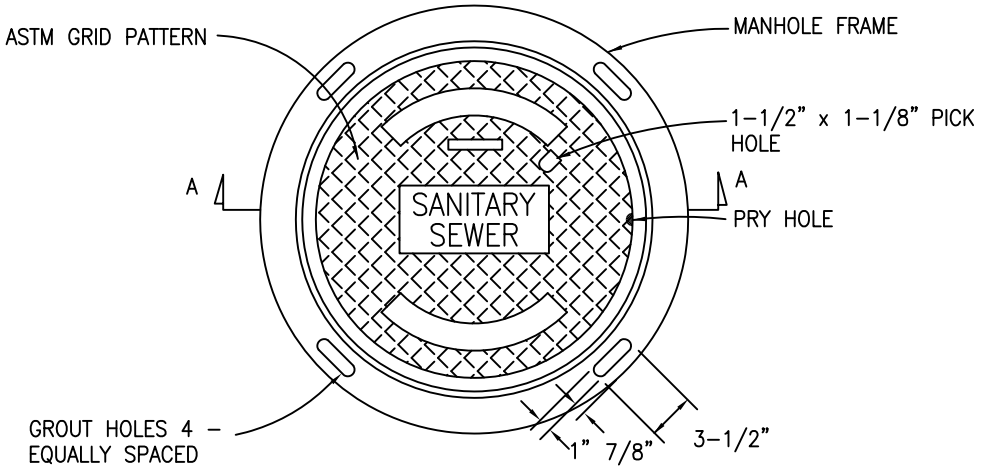

PLAN

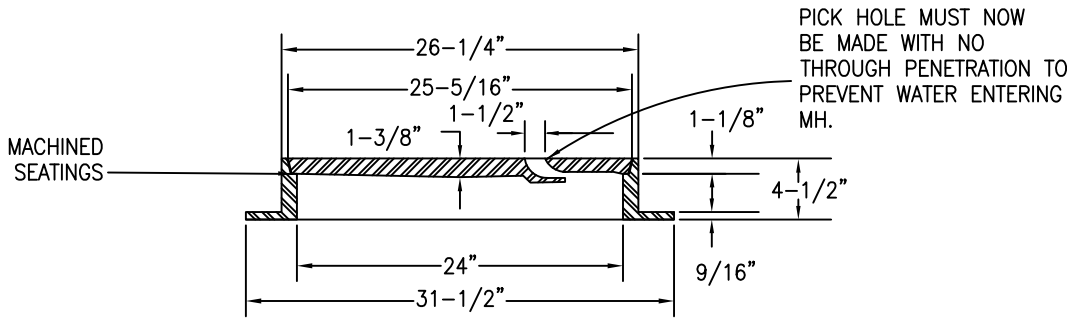

SECTION A-A

NOTES:

1. MANHOLE FRAME AND COVER SHALL BE MANUFACTURED BY PHOENIX IRON WORKS, OAKLAND, NO.P-1090 OR APPROVED EQUIVALENT.
2. FOR MANHOLE LOCATED IN SIDEWALK AREAS USE PHOENIX NO. P-1067 FRAME AND COVER OR APPROVED EQUIVALENT.
3. MINIMUM WEIGHT OF FRAME IS 138 LBS.
   MINIMUM WEIGHT OF COVER IS 130 LBS.

SCALE: NTS

CITY OF ALBANY, CALIFORNIA	STANDARD DETAIL	
APPROVED BY: Ray Chan DATE: DECEMBER 2015	STANDARD MANHOLE FRAME AND COVER	STD DETAIL No. SS 1

K:\Standard Specifications and details\Details\CAD Drawings\SS 1 Standard Manhole to City 042913.dwg

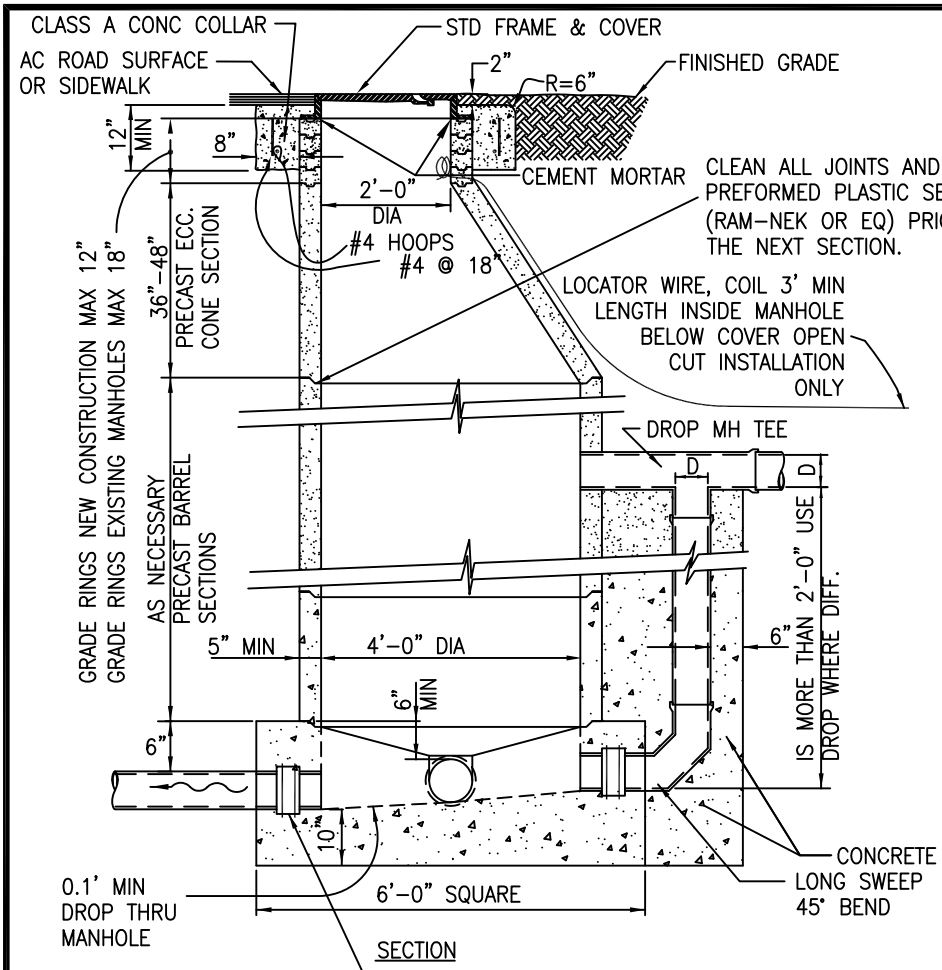

SECTION

NOTES:

1. MANHOLE BASE SHALL BE CLASS A (6-SACK) CONCRETE AND SHALL BE POURED AGAINST UNDISTURBED SOIL.
2. PRECAST CONCRETE CONE, BARREL AND GRADE RINGS SHALL CONFORM TO A.S.T.M. SPEC C-478, EXCEPT THAT TYPE II MODIFIED PORTLAND CEMENT SHALL BE USED.
3. ECCENTRIC CONE SECTION SHALL BE POSITIONED AS DIRECTED BY THE CITY.
4. RECESS IN MANHOLE BASE SHALL BE FORMED WITH AN APPROVED METAL FORMING RING TO RECEIVE PRECAST MANHOLE JOINT. PREFORMED PLASTIC SEAL GASKET SHALL BE INSTALLED BEFORE PLACING FIRST BARREL SECTION.
5. PRECAST MANHOLE BASES ARE NOT ALLOWED UNLESS SPECIFICALLY APPROVED BY THE CITY.

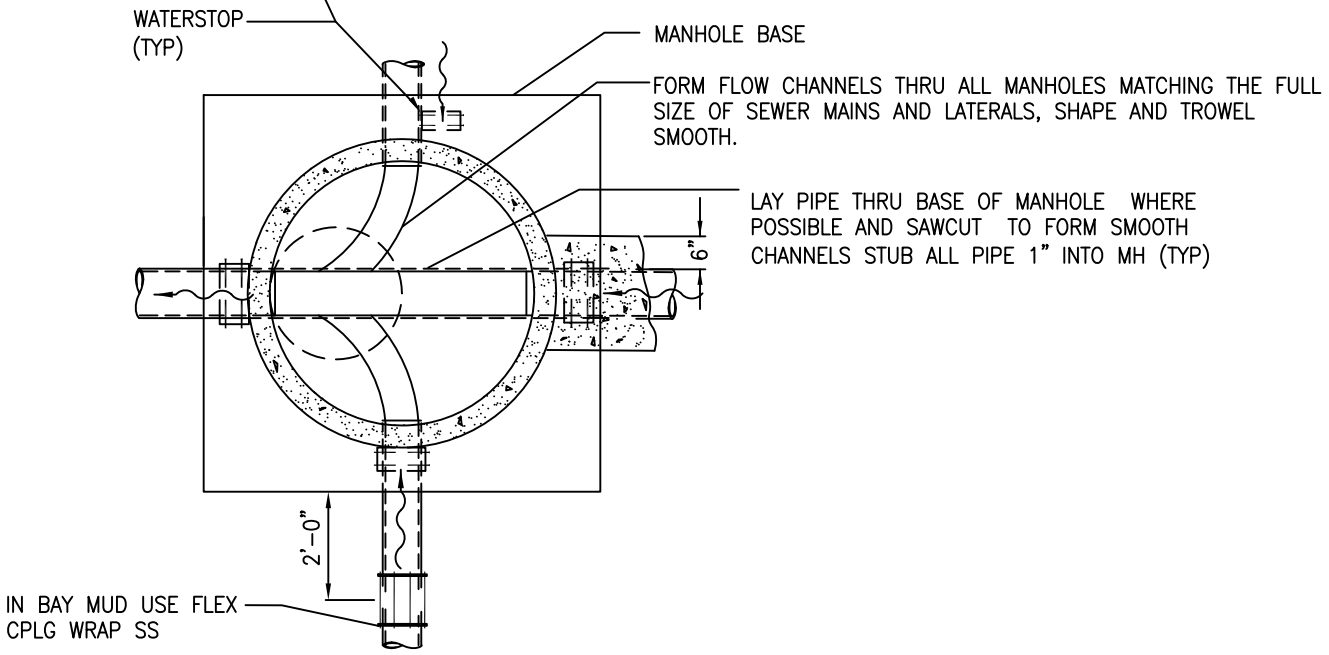

PLAN AT MH BOTTOM

SCALE: NTS

CITY OF ALBANY, CALIFORNIA	STANDARD DETAIL	
APPROVED BY: Ray Chan DATE: DECEMBER 2015	STANDARD SEWER MANHOLE	STD DETAIL No. SS 2

K:\Standard Specifications and details\Details\CAD Drawings\SS 2 Standard Sewer Manhole.dwg

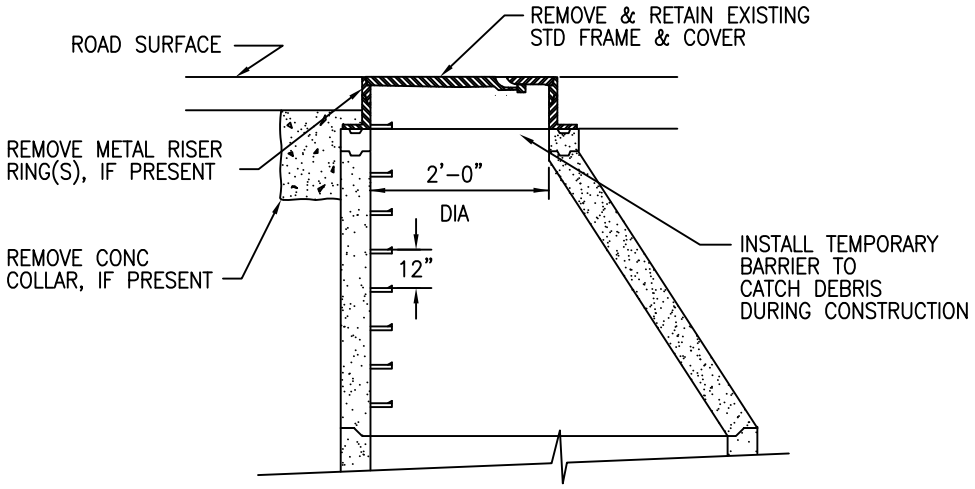

EXISTING CONDITION

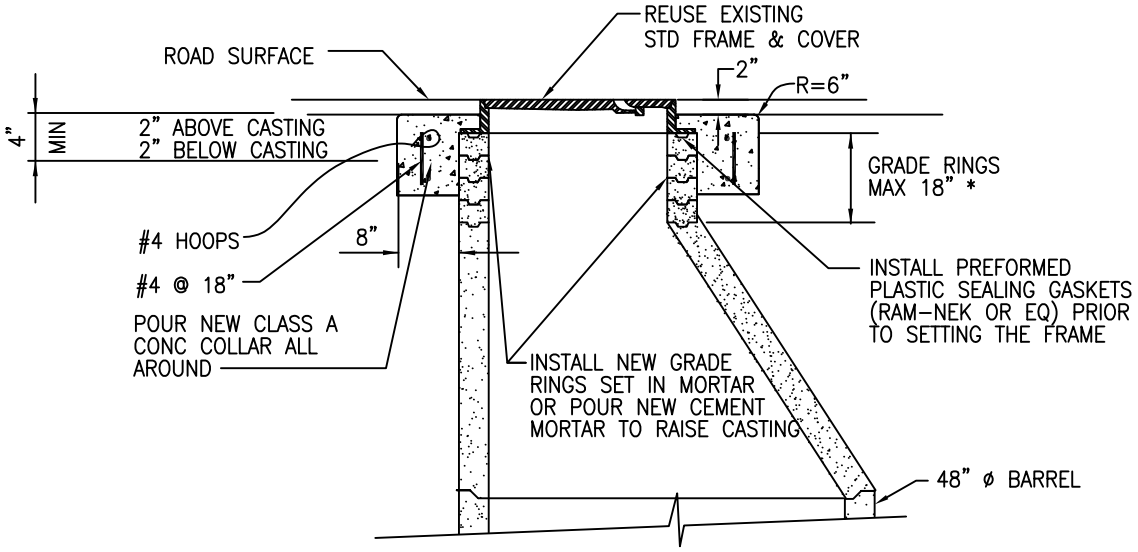

RAISED RING CONDITION

* IF GRADE RINGS EXCEED 18" REMOVE CONE AND INSTALL NEW 48" DIAMETER BARREL SECTION

SCALE: NTS

CITY OF ALBANY, CALIFORNIA	STANDARD DETAIL	
APPROVED BY: Ray Chan DATE: DECEMBER 2015	RAISED MANHOLE RING AND COVER	STD DETAIL No. SS 3

K:\Standard Specifications and details\Details\CAD Drawings\SS 3 Raised Manhole Ring and Cover.dwg

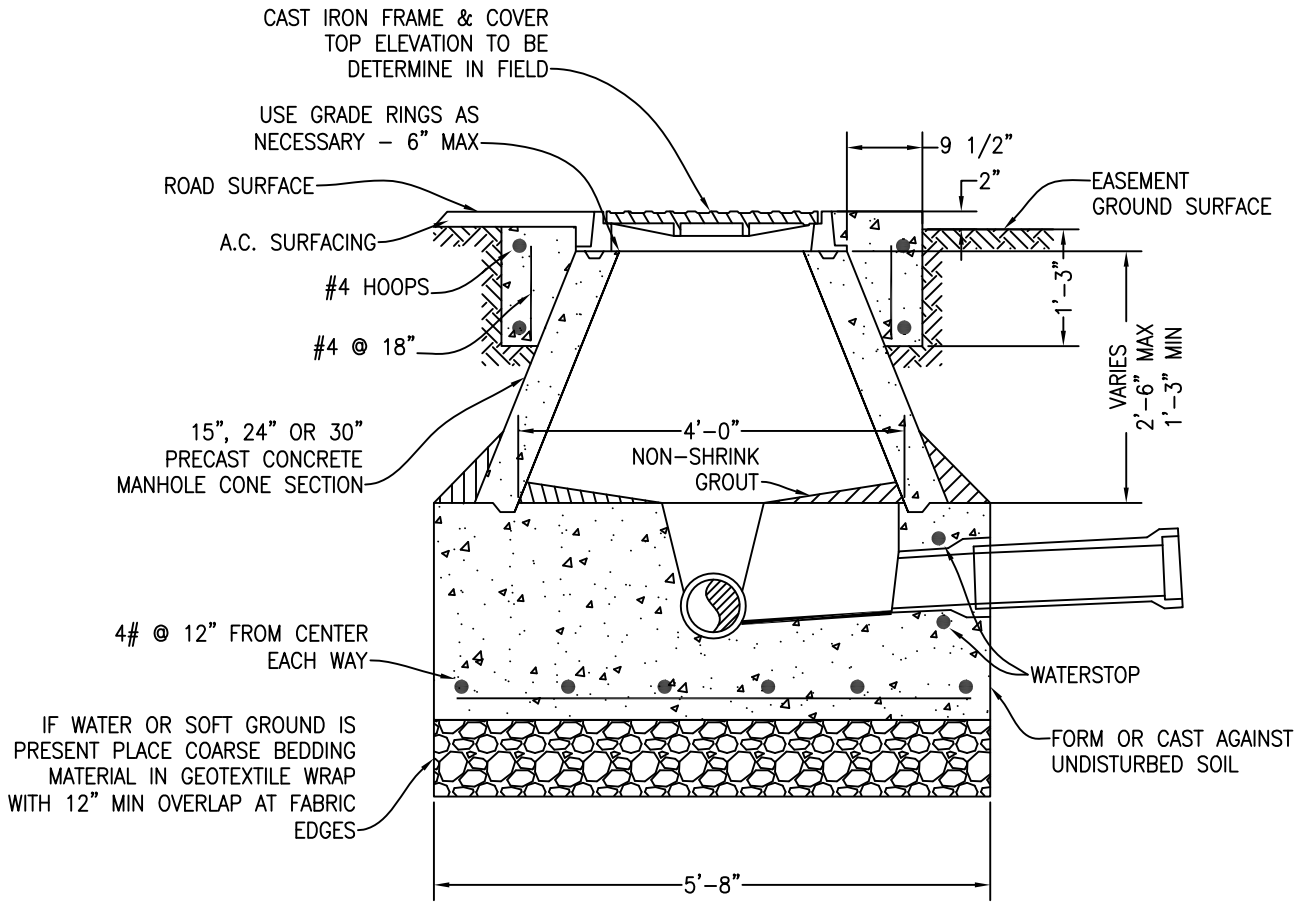

NOTES:

1. THIS MANHOLE MAY BE USED WHERE DISTANCE FROM TOP OF BASE TO BOTTOM OF FRAME IS BETWEEN 1'–3" AND 2'–6".

2. ALL STEEL REINFORCEMENT SHALL HAVE 3" MINIMUM CONCRETE COVER.

SCALE: NTS

CITY OF ALBANY, CALIFORNIA	STANDARD DETAIL	
APPROVED BY: Ray Chan DATE: DECEMBER 2015	SHALLOW MANHOLE	STD DETAIL No. SS 4

K:\Standard Specifications and details\Details\CAD Drawings\SS 4 Shallow Manhole.dwg

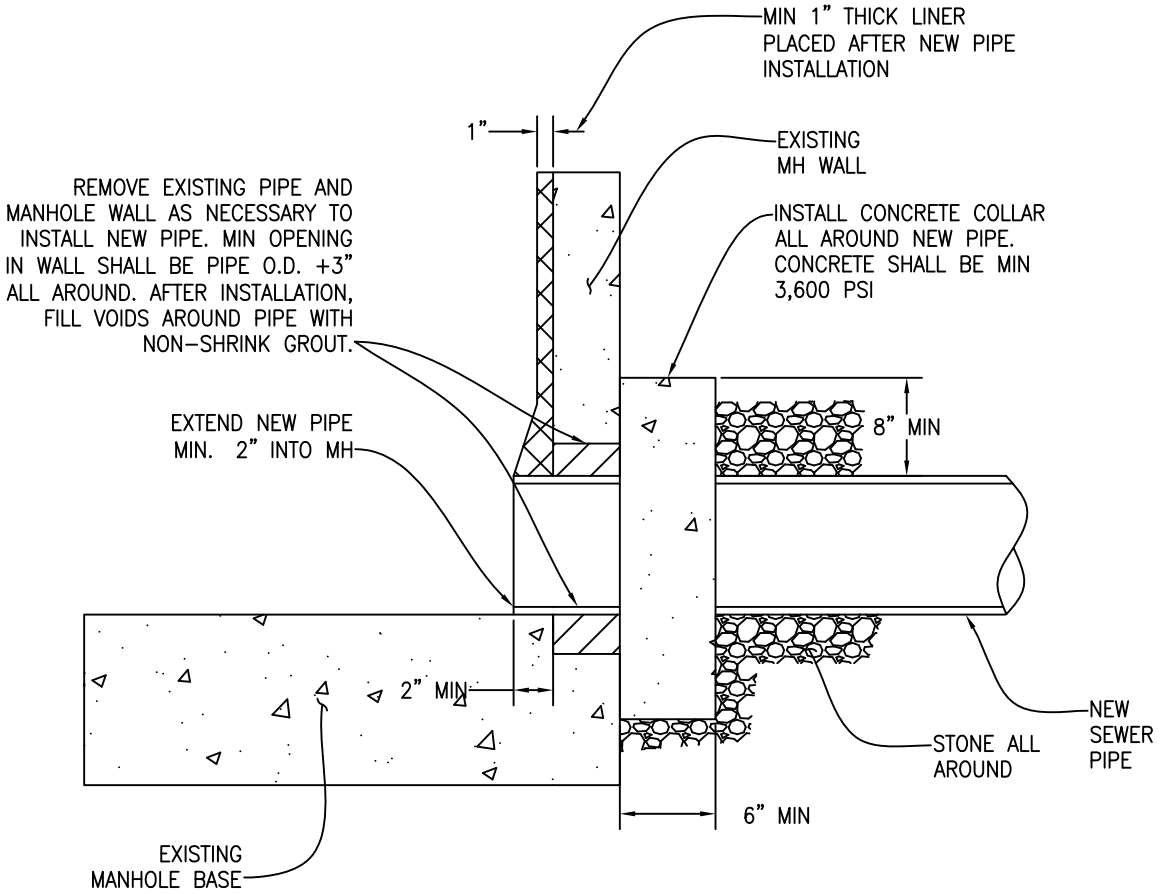

NOTES:

1. CONTRACTOR SHALL REFER TO THIS DETAIL WHEN CONNECTING NEW SEWER PIPES TO EXISTING MANHOLES. THE NEW PIPE MAY BE INSTALLED FOR A POINT REPAIR, PIPE REPLACEMENT, PIPE BURSTING OR SERVICE LATERAL REPLACEMENT.

SCALE: NTS

CITY OF ALBANY, CALIFORNIA	STANDARD DETAIL	
APPROVED BY: Ray Chan DATE: DECEMBER 2015	NEW PIPE TO EXISTING MANHOLE CONNECTION	STD DETAIL No. SS 5

K:\Standard Specifications and details\Details\CAD Drawings\SS 5 New Pipe to Existing Manhole Connection.dwg

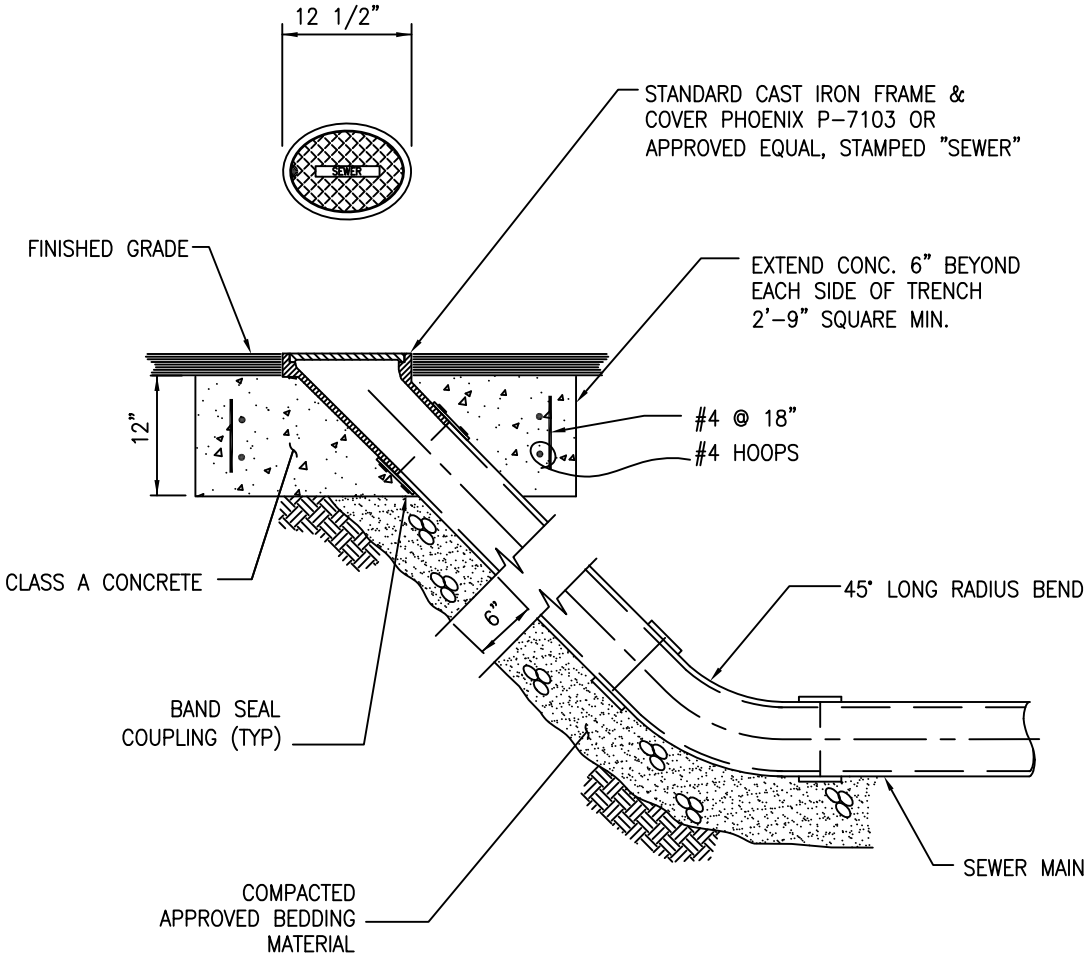

NOTES

1. WHERE SEWER MAIN IS 6.63" OD POLYETHYLENE PIPE, USE 6" C-900 LONG RADIUS BELL X BELL 45° BEND AND RUN TO CLEANOUT CASTING.
2. CONTRACTOR SHALL VERIFY COMPATIBILITY WITH SEWER PIPE USE FOR RODDING AND FLUSHING CLEANOUT.

SCALE: NTS

CITY OF ALBANY, CALIFORNIA	STANDARD DETAIL	
APPROVED BY: Ray Chan DATE: DECEMBER 2015	STANDARD RODDING INLET	STD DETAIL No. SS 6

K:\Standard Specifications and details\Details\CAD Drawings\SS 6 Standard Rodding Inlet.dwg

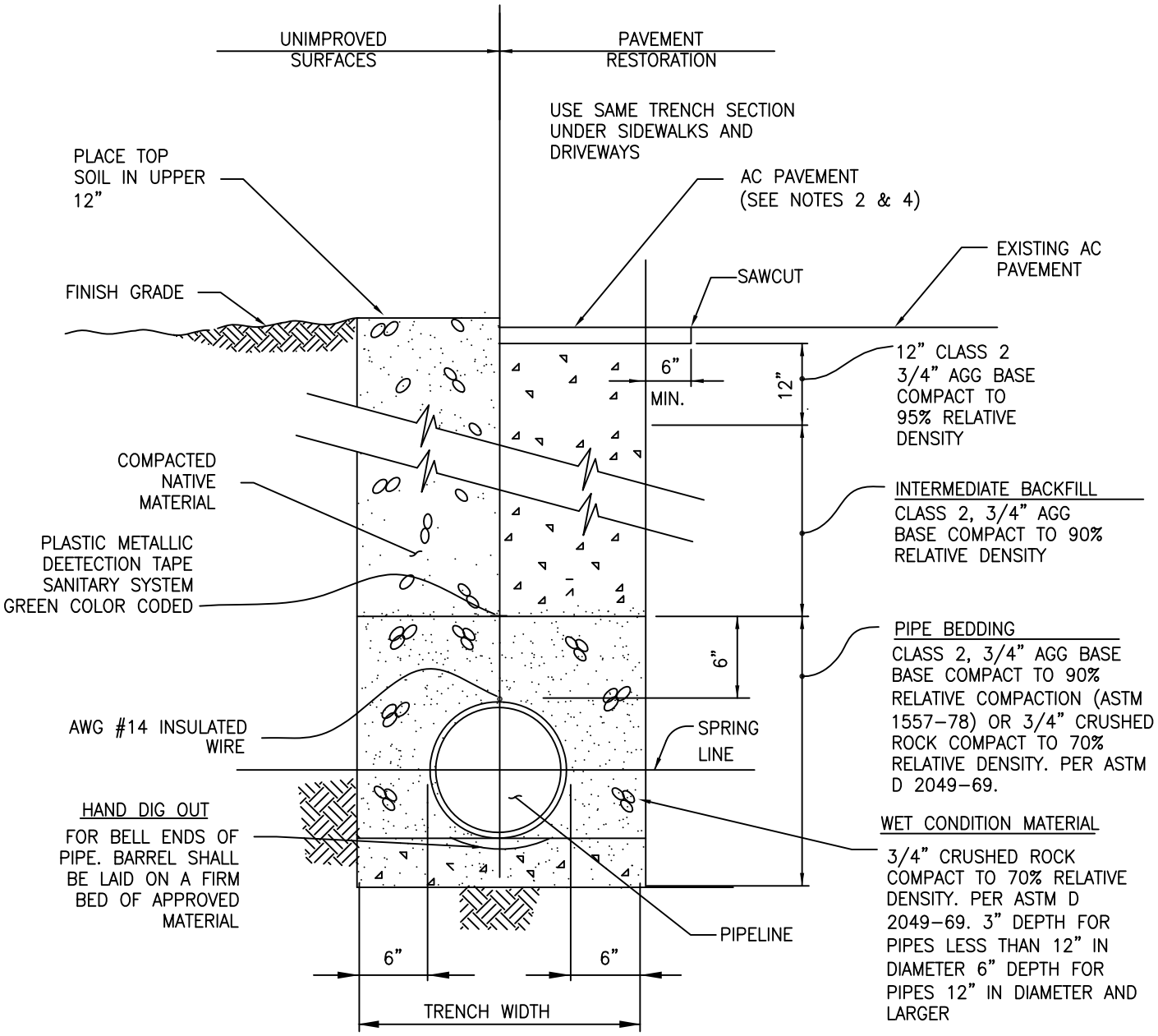

PIPE BEDDING DETAIL

NOTES:

1. INSTALL 4' LONG COMPACTED IMPERVIOUS CLAY OR SLURRY CEMENT PLUGS IN PIPE ZONE BACKFILL AND PIPE BEDDING AT 400' INTERVALS.
2. MATCH EXISTING ASPHALT THICKNESS PLUS 1" (3" THICK, MINIMUM).
3. CONTROLLED DENSITY FILL MAY BE USED AS AN ALTERNATE PROVIDING MEASURES ARE TAKEN TO PREVENT PIPE FLOTATION.
4. THE FINAL LIFT OF AC IN STREETS SHALL BE COMPACTED WITH A ROLLER APPROVED BY THE PUBLIC WORKS DEPARTMENT.

SCALE: NTS

CITY OF ALBANY, CALIFORNIA	STANDARD DETAIL	
APPROVED BY: Ray Chan DATE: DECEMBER 2015	TYPICAL TRENCH SECTION	STD DETAIL No. SS 7

K:\Standard Specifications and details\Details\CAD Drawings\SS 7 Typical Trench Section.dwg

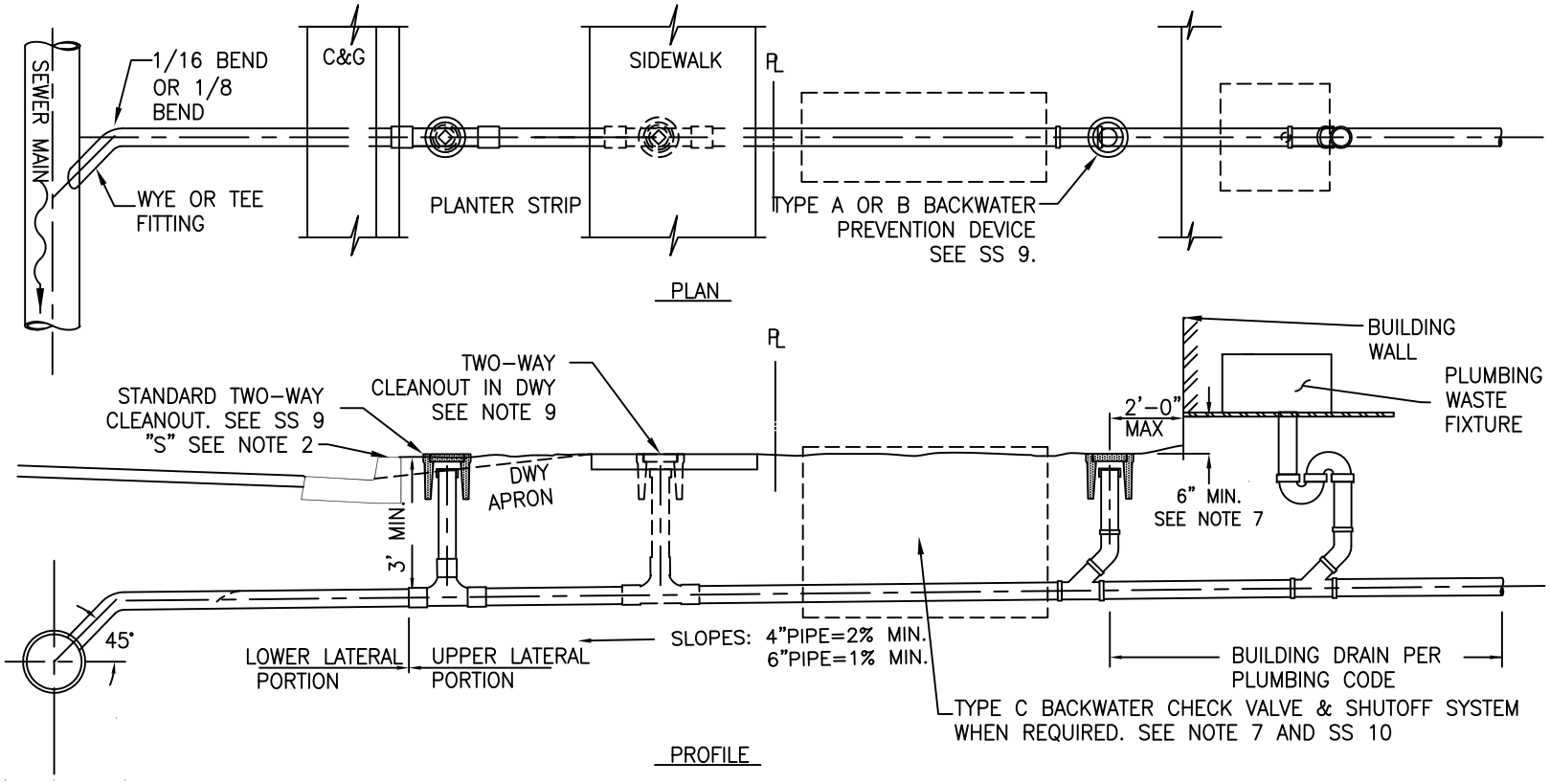

NOTES:

1. WHEN THE LOWER LATERAL SEWER IS INSTALLED IN ADVANCE OF THE UPPER LATERAL, IT SHALL BE TERMINATED AT OR NEAR THE PROPERTY LINE. THE END OF THE LOWER LATERAL SHALL BE MARKED WITH A 4" x 4" REDWOOD STAKE, PAINTED GREEN, FROM THE TOP OF THE PIPE TO A MINIMUM OF 6" ABOVE THE FINISHED GROUND SURFACE.
2. WHERE CONCRETE CURBS AND GUTTERS EXIST OR ARE TO BE A PART OF AN IMPROVEMENT, EACH SIDE SEWER SHALL BE PERMANENTLY LOCATED BY IMPRINTING OR CHISELING AN "S" (3" SIZE) ON THE TOP OF THE CURB VERTICALLY ABOVE THE SEWER PIPE.
3. BACKFILL SHALL NOT BE PLACED UNTIL PIPE INSTALLATION HAS BEEN INSPECTED AND APPROVED BY THE CITY.
4. IN TRAFFIC AREAS WHERE MINIMUM COVER CANNOT BE ACHIEVED, THE CITY ENGINEER MAY REQUIRE CAST IRON PIPE OR STANDARD CONCRETE PIPE PROTECTION PER SS 13.
5. MINIMUM PIPE SLOPE OF LESS THAN WHAT IS SPECIFIED MUST BE APPROVED BY THE CITY ENGINEER.
6. THE SIDE SEWER SIZE IS FOUR (4) INCHES IN DIAMETER FOR SINGLE FAMILY RESIDENTIAL. SIX (6) INCHES OR LARGER IN DIAMETER SIDE SEWER SHALL BE INSTALLED WHERE USE IS TO BE INDUSTRIAL, COMMERCIAL, OR MULTI-FAMILY RESIDENTIAL.
6. IF THE DIFFERENCE IN ELEVATION BETWEEN THE LOWEST FLOOR WITH PLUMBING WASTE FIXTURES AND THE RIM OF THE BACKWATER PREVENTION DEVICE IS LESS THAN SIX (6) INCHES, A TYPE C OR D BACKWATER CHECK VALVE AND SHUTOFF SYSTEM SHALL BE INSTALLED AS SHOWN ON STANDARD DETAIL SS 7.
7. ADDITIONAL CLEANOUTS SHALL BE INSTALLED AT CHANGES IN DIRECTION WHERE THE ACCUMULATIVE TOTAL OF DEFLECTION FROM ANOTHER CLEANOUT IS MORE THAN 45°. THE MAXIMUM DISTANCE BETWEEN CLEANOUTS SHOULD BE 100 FEET, PER THE UNIFORM PLUMBING CODE.
8. CLEANOUTS AND RISER PIPES SHALL BE THE SAME SIZE AS THE LATERAL.
9. WHEN LOWER LATERAL FALLS WITHIN A DRIVEWAY, THE TWO WAY CLEANOUT SHALL BE LOCATED AT THE SIDEWALK ELEVATION, CLEAR OF THE APRON.

SCALE: NTS

CITY OF ALBANY, CALIFORNIA

STANDARD DETAIL

STANDARD LATERALS AND CLEANOUTS

APPROVED BY: Ray Chan

DATE: DECEMBER 2015

STD DETAIL No. SS 8

K:\Standard Specifications and details\Details\CAD Drawings\SS 8 Standard Laterals and Cleanouts.dwg

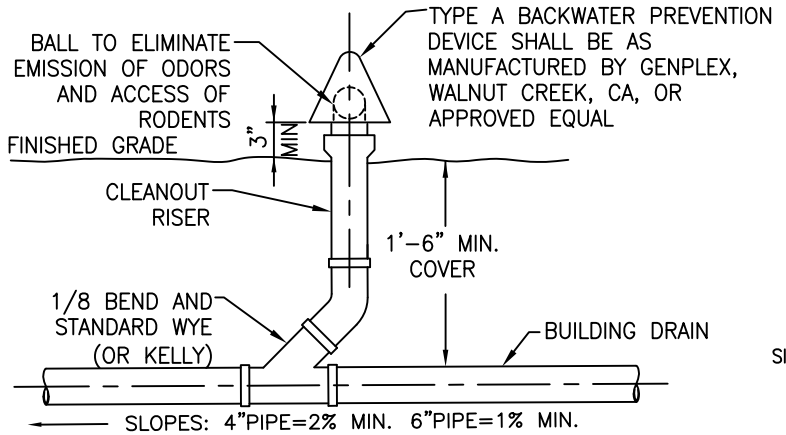

TYPE A
BACKWATER PREVENTION DEVICE

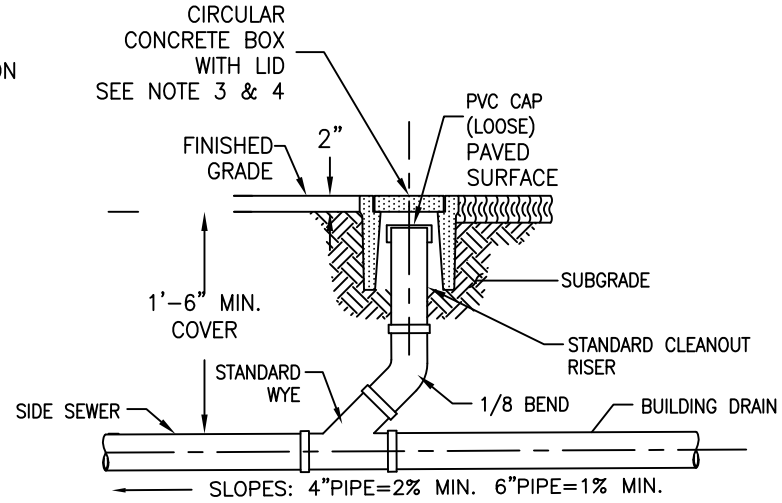

TYPE B
BACKWATER PREVENTION DEVICE

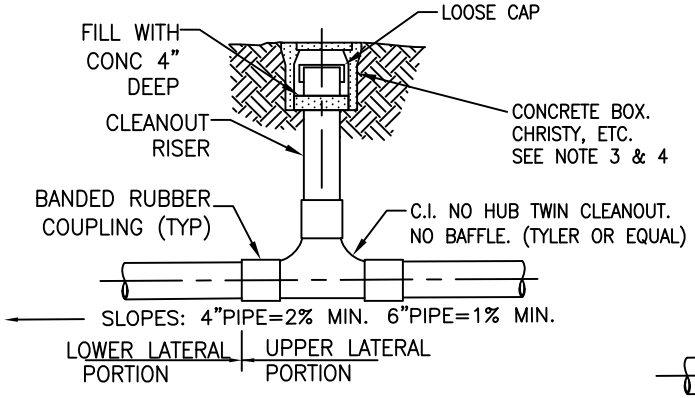

STANDARD TWO-WAY CLEANOUT

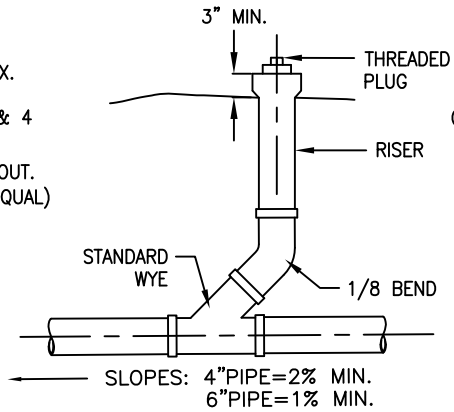

STANDARD ONE-WAY CLEANOUT

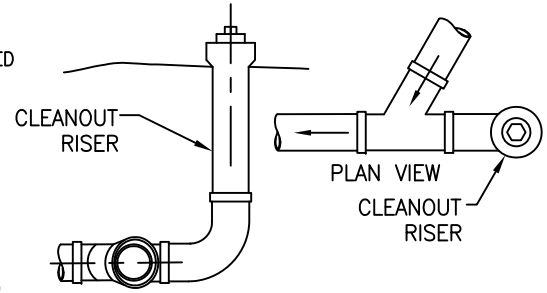

ANGLE POINT TYPE

NOTES

1. A BACKWATER PREVENTION DEVICE OR A BACKWATER SHUTOFF AND CHECK VALVE SYSTEM SHALL BE INSTALLED ON ALL UPPER LATERALS. BACKWATER PREVENTION DEVICES WILL ONLY BE PERMITTED WHEN SEWER OVERFLOW FROM THE PREVENTION DEVICE WILL NOT CAUSE DAMAGE TO THE SURROUNDING AREA. WHEN SEWER OVERFLOW COULD CAUSE SERIOUS DAMAGE TO THE SURROUNDING AREA, A STANDARD BACKWATER SHUTOFF AND CHECK VALVE SYSTEM SHALL BE INSTALLED AS SHOWN ON SS 10.

2. IF THE DIFFERENCE IN ELEVATION BETWEEN THE LOWEST FLOOR WITH PLUMBING WASTE FIXTURES AND THE RIM OF THE BACKWATER PREVENTION DEVICE IS LESS THAN SIX (6) INCHES, A TYPE C OR D BACKWATER CHECK VALVE AND SHUTOFF SYSTEM SHALL BE INSTALLED AS SHOWN ON STANDARD DETAIL SS 8.

3. CONCRETE BOXES COVERS SHALL BE TRAFFIC RATED WHEN USED IN AREAS SUBJECTED TO TRAFFIC SUCH AS DRIVEWAYS.

4. BOX SHALL BE CHRISTY F8 OR EQUAL; USE F8D LID IN NON-TRAFFIC AREAS AND F8C FOR TRAFFIC AREAS.

SCALE: NTS

CITY OF ALBANY, CALIFORNIA

STANDARD DETAIL

STANDARD CLEANOUTS AND BACKWATER PREVENTION DEVICE

APPROVED BY: Ray Chan

DATE: DECEMBER 2015

STD DETAIL No. SS 9

K:\Standard Specifications and details\Details\CAD Drawings\SS 9 Standard COs and BFPs.dwg

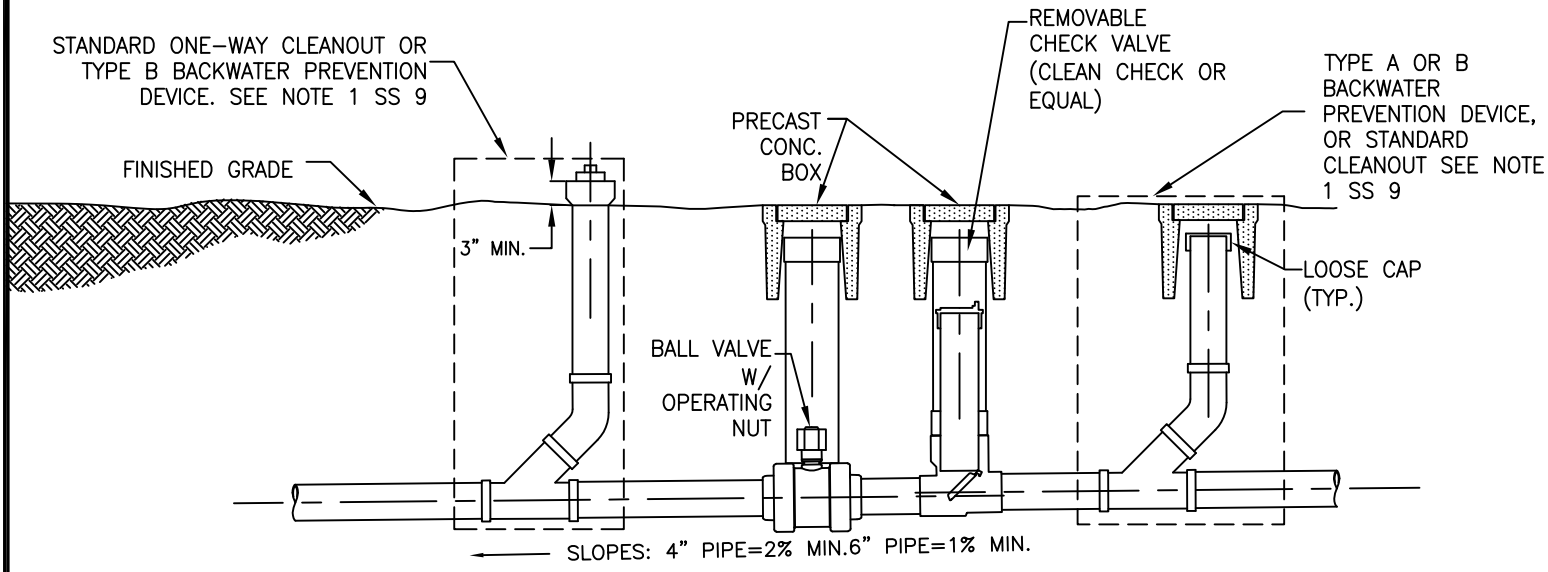

TYPE C
BACKWATER SHUTOFF AND CHECK VALVE SYSTEM

SCALE: NTS

CITY OF ALBANY, CALIFORNIA	STANDARD DETAIL	
APPROVED BY: Ray Chan DATE: DECEMBER 2015	BACKWATER SHUTOFF AND CHECK VALVE SYSTEM	STD DETAIL No. SS 10

K:\Standard Specifications and details\Details\CAD Drawings\SS 10 Backwater Shutoff and Check Valve System.dwg

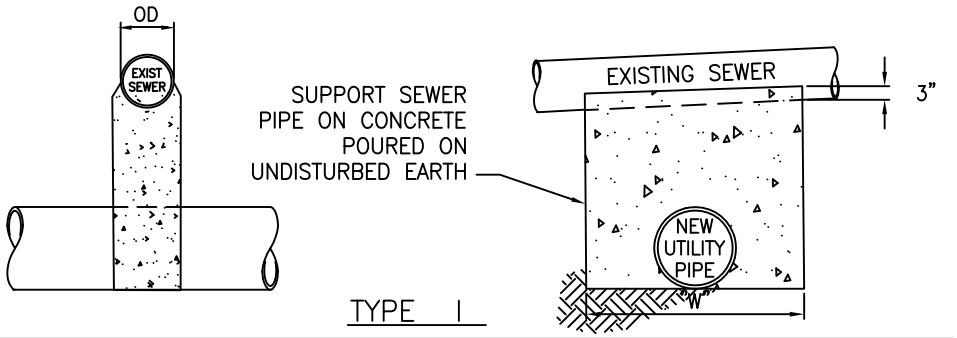

TYPE I

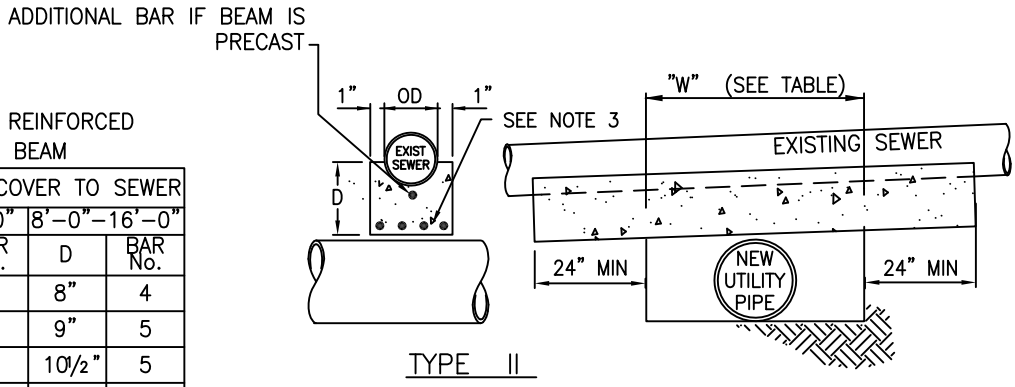

TYPE II

DIMENSIONS OF REINFORCED CONCRETE BEAM

W	DEPTH OF COVER TO SEWER			
	0' – 8'–0"		8'–0"–16'–0"	
	D	BAR No.	D	BAR No.
4'	8"	4	8"	4
5'	8"	4	9"	5
6'	8½"	5	10½"	5
7'	9"	5	11½"	6
8'	10"	5	12½"	6
9'	11"	6	13½"	6
10'	12"	6	15"	7

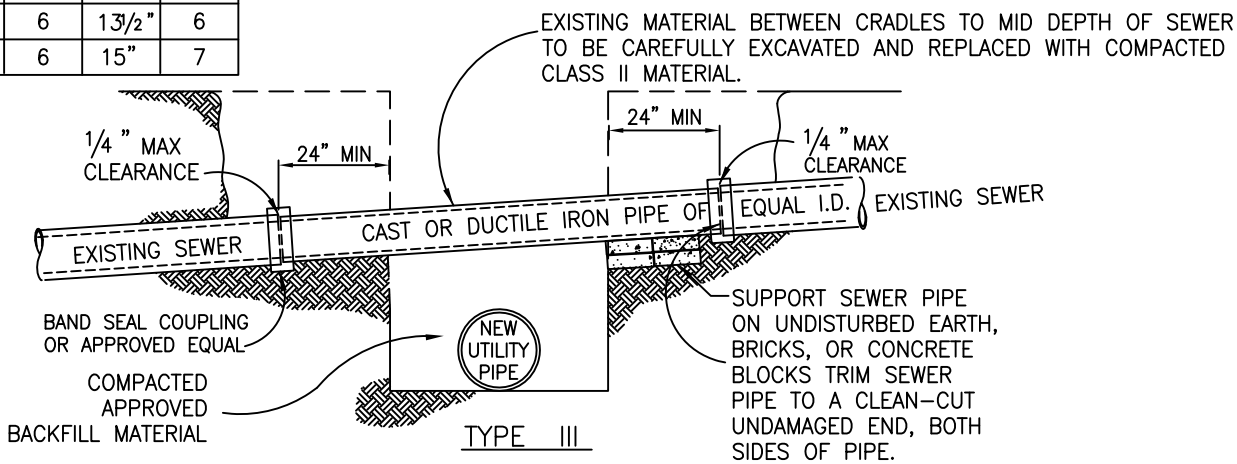

TYPE III

NOTES:

1. SEWER PROTECTION, AS DETAILED HEREON, SHALL BE PROVIDED WHEN A NEW UTILITY PIPE, IS INSTALLED BELOW AN EXISTING MAIN SEWER. TYPE I, TYPE II OR TYPE III MAY BE USED AT THE CONTRACTOR'S OPTION, UNLESS OTHERWISE SHOWN ON THE PLANS OR DIRECTED BY THE CITY.
2. WHEN THE CLEARANCE BETWEEN THE PIPES IS 1' OR LESS INSTALL A 4" x 4" PAD OF 35–45 DUROMETER RUBBER SNUGLY FIT BETWEEN THE PIPES.
3. MAXIMUM SPACING OF REINFORCING STEEL TO BE 4" CENTER TO CENTER.
4. CONCRETE TO BE CLASS A (6 SACK MIX)
5. BACKFILL SHALL NOT BE PLACED UNTIL PIPE INSTALLATION HAS BEEN INSPECTED AND APPROVED BY THE CITY.

SCALE: NTS

CITY OF ALBANY, CALIFORNIA	STANDARD DETAIL	
APPROVED BY: Ray Chan DATE: DECEMBER 2015	MAIN SEWER PROTECTION ABOVE UTILITY CROSSING	STD DETAIL No. SS 11

K:\Standard Specifications and details\Details\CAD Drawings\SS 11 Main Sewer Protection Above Utility Crossing.dwg

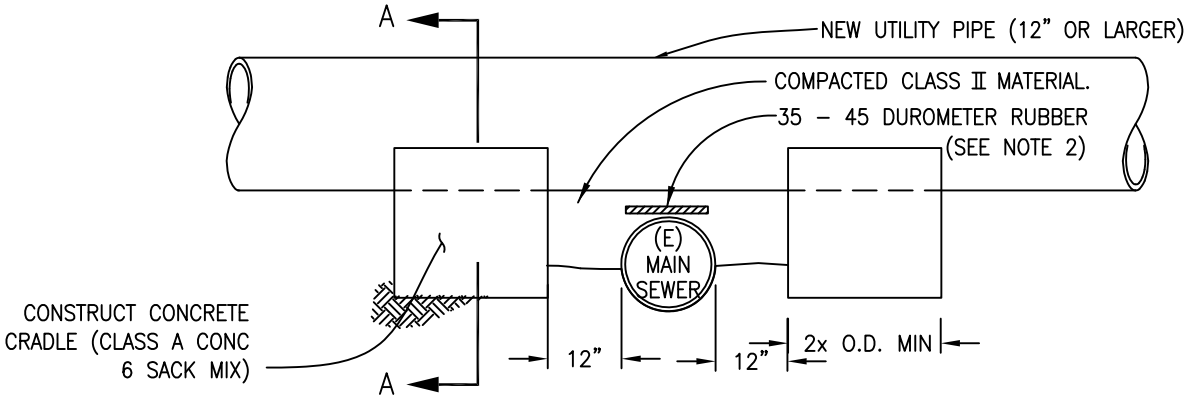

MAIN SEWER

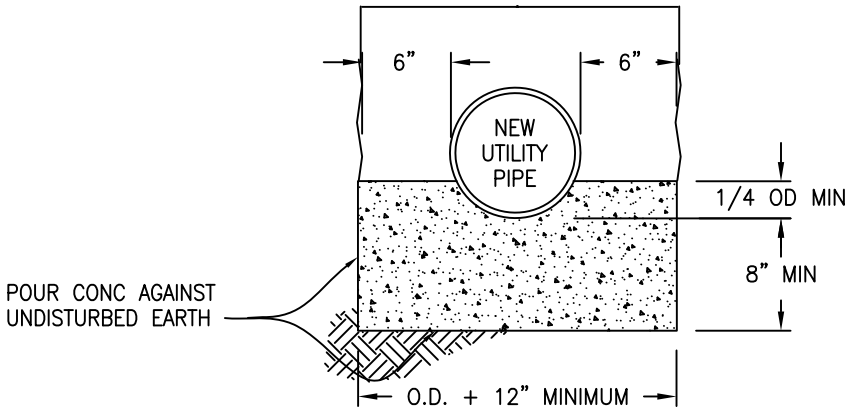

SECTION A–A

NOTES:

1. SEWER PROTECTION, AS DETAILED HEREON, SHALL BE PROVIDED WHEN A NEW UTILITY PIPE, 12" OR LARGER, IS INSTALLED ABOVE AN EXISTING MAIN SEWER AND THE CLEARANCE IS LESS THAN 12".
2. WHEN THE OUTSIDE DIAMETER OF THE PIPES ARE WITHIN 1' OF THE OTHER THERE SHALL BE A 4" x 4" PAD OF 35–45 DUROMETER RUBBER PLACED SNUGLY BETWEEN PIPES.
3. EXISTING MATERIAL BETWEEN CRADLES TO MID DEPTH OF SEWER TO BE CAREFULLY EXCAVATED AND REPLACED WITH COMPACTED CLASS II MATERIAL.
4. BACKFILL SHALL NOT BE PLACED UNTIL PIPE INSTALLATION HAS BEEN INSPECTED AND APPROVED BY CITY.

SCALE: NTS

CITY OF ALBANY, CALIFORNIA	STANDARD DETAIL	
APPROVED BY: Ray Chan DATE: DECEMBER 2015	MAIN SEWER PROTECTION BELOW UTILITY CROSSING	STD DETAIL No. SS 12

K:\Standard Specifications and details\Details\CAD Drawings\SS 12 Main Sewer Protection Below Utility Crossing.dwg

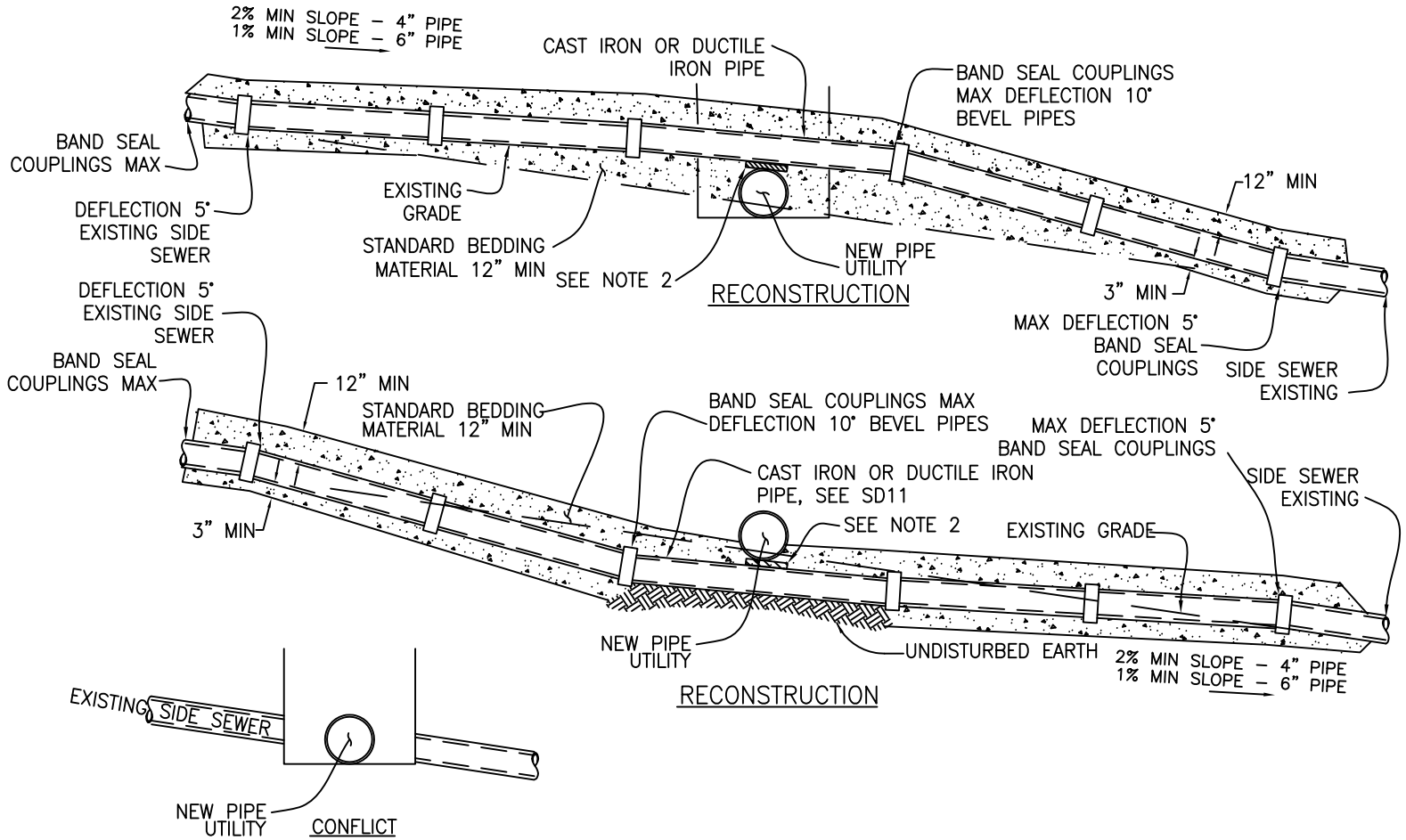

NOTES:

1. WHEN ANY NEW UTILITY PIPE OR CONDUIT CONFLICTS WITH AN EXISTING SEWER LINE GRADE, THE UTILITY PIPE OR CONDUIT WRITTEN PERMISSION SHALL BE OBTAINED FROM THE CITY OF ALBANY, AND THE SEWER LINE SHALL BE RECONSTRUCTED IN SHALL BE RAISED OR LOWERED, IF POSSIBLE, TO MISS THE SEWER LINE. IF IT IS NOT POSSIBLE TO MOVE THE UTILITY LINE, ACCORDANCE WITH ONE OF THE DETAILS ABOVE AND THE STANDARD SPECIFICATIONS OF THE CITY.

2. WHEN THE CLEARANCE BETWEEN THE PIPES IS 1' OR LESS, INSTALL A 4" x 4" PAD OF 35–45 DUROMETER RUBBER SNUGLY FIT BETWEEN THE PIPES.

SCALE: NTS

CITY OF ALBANY, CALIFORNIA

STANDARD DETAIL

APPROVED BY: Ray Chan

DATE: DECEMBER 2015

SIDE SEWER RECONSTRUCTION AT UTILITY CROSSING

STD DETAIL No. SS 13

K:\Standard Specifications and details\Details\CAD Drawings\SS 13 Side Sewer Protection At Utility Crossing.dwg

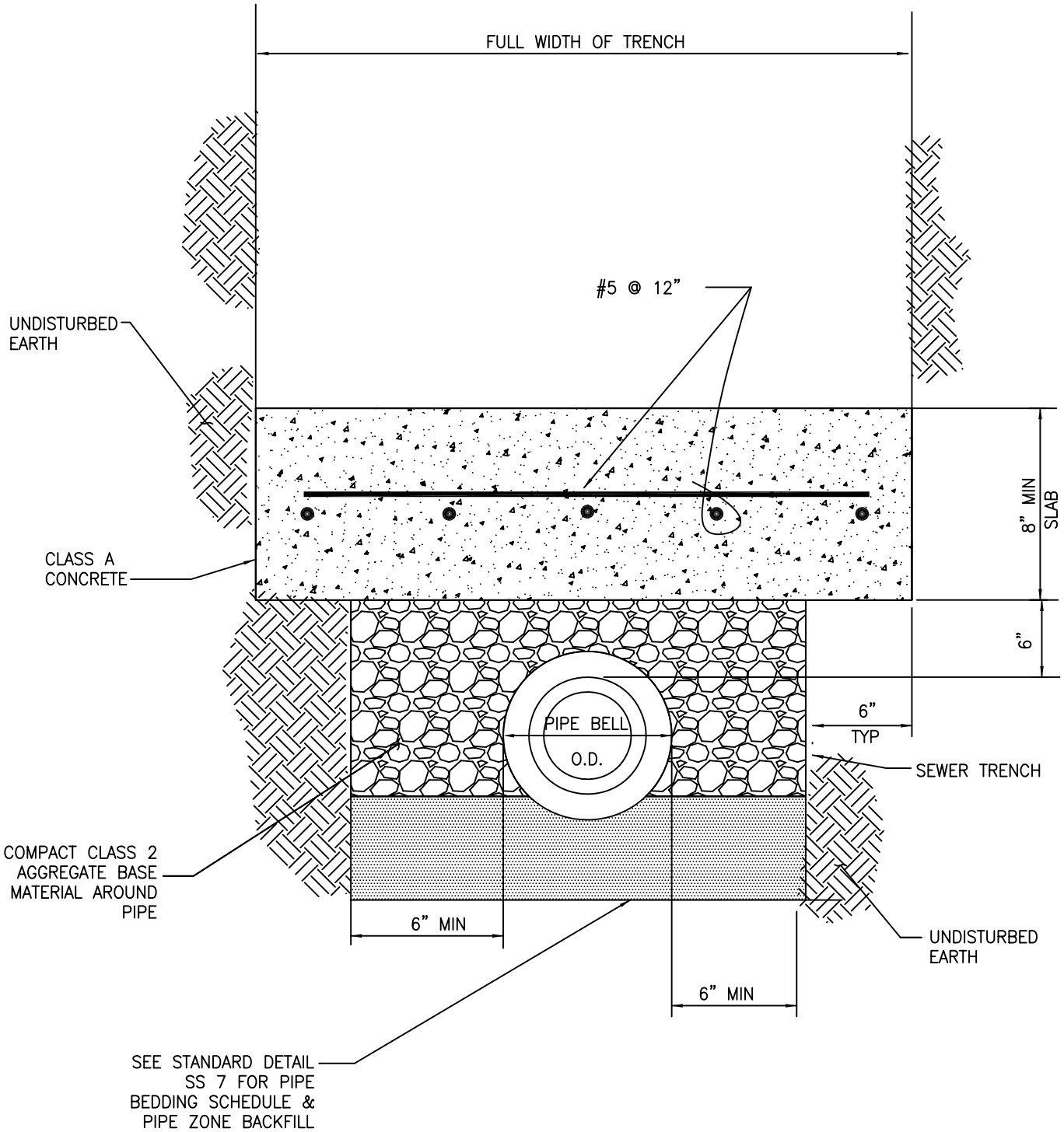

NOTES

1. INSTALL OVER SEWER MAINS AND LOWER LATERALS WITH LESS THAN 30" COVER AND OVER UPPER LATERALS WITH LESS THAN 18" COVER.

SCALE: NTS

CITY OF ALBANY, CALIFORNIA	STANDARD DETAIL	
APPROVED BY: Ray Chan DATE: DECEMBER 2015	STANDARD CONCRETE PIPE PROTECTION	STD DETAIL No. SS 14

K:\Standard Specifications and details\Details\CAD Drawings\SS 14 Standard Concrete Pipe Protection.dwg

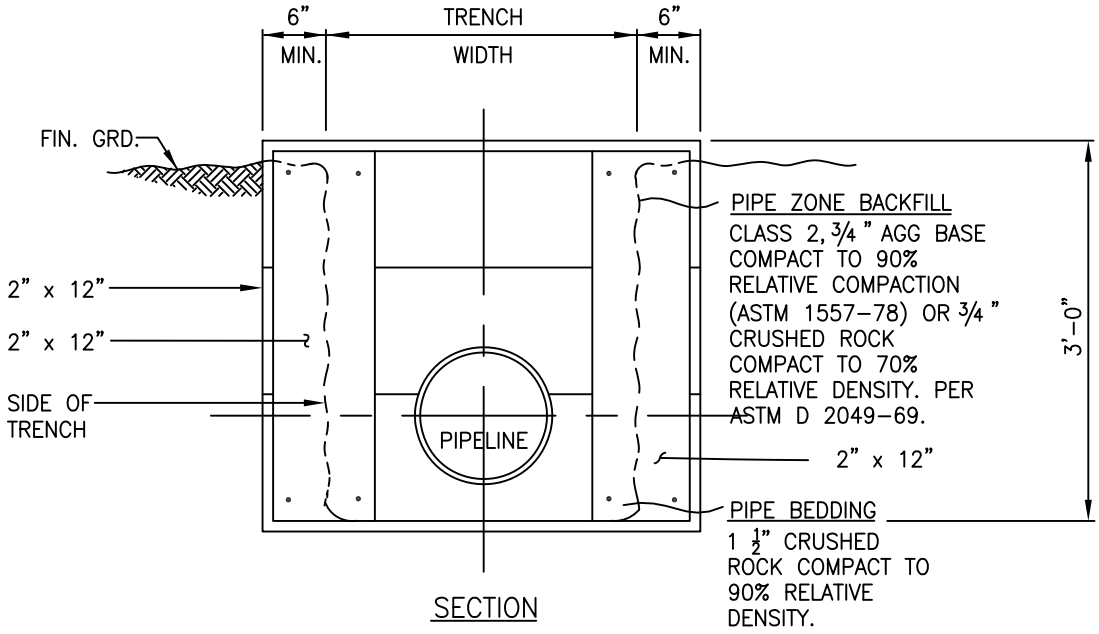

SECTION

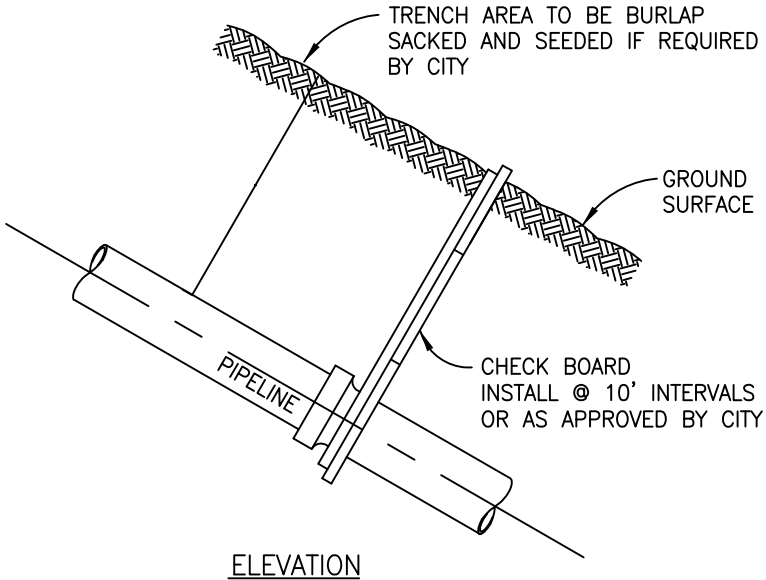

ELEVATION

NOTES:

1. CHECK BOARDS TO BE PLACED ON ALL SLOPES GREATER THAN 50% OR WHERE REQUIRED BY THE CITY.
2. ALL SLOPES 50% OR GREATER SHALL HAVE CLASS 150 C.I. BELL & SPIGOT PIPE.
3. ALL REDWOOD TO BE FOUNDATION GRADE

SCALE: NTS

CITY OF ALBANY, CALIFORNIA	STANDARD DETAIL	
APPROVED BY: Ray Chan DATE: DECEMBER 2015	STANDARD REDWOOD CHECK BOARD	STD DETAIL No. SS 15

K:\Standard Specifications and details\Details\CAD Drawings\SS 15 Standard Redwood Check Board.dwg

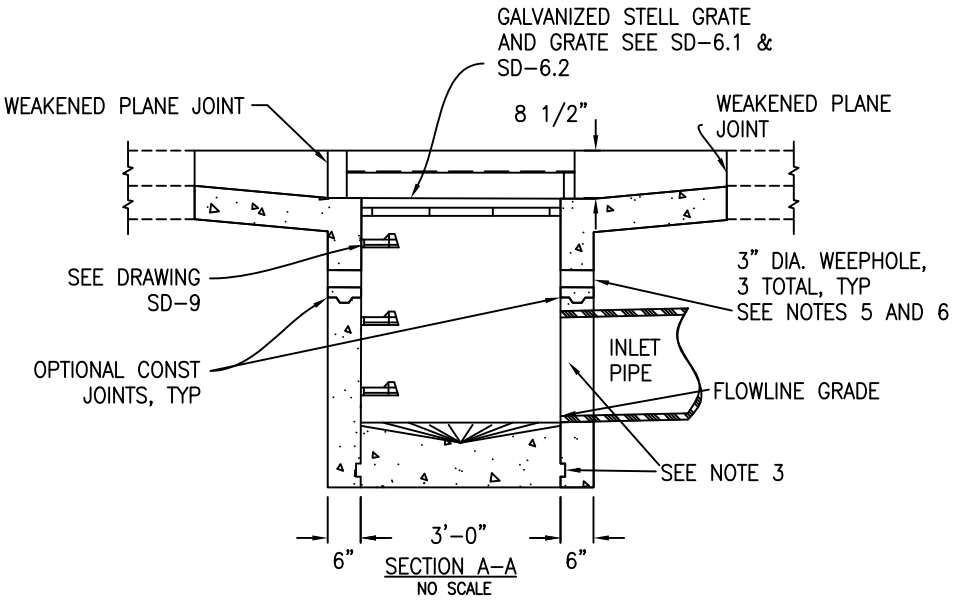

SECTION A-A
NO SCALE

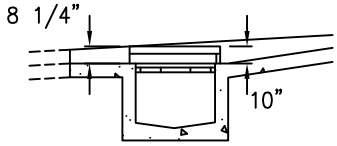

DETAIL FOR STEEP CURB SLOPE

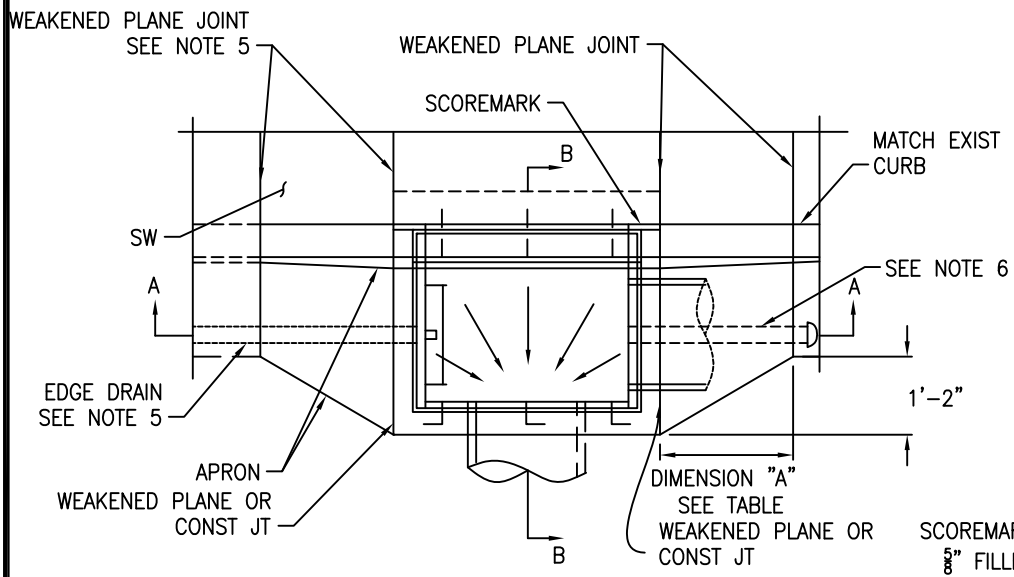

PLAN
NO SCALE
GRATE NOT SHOWN

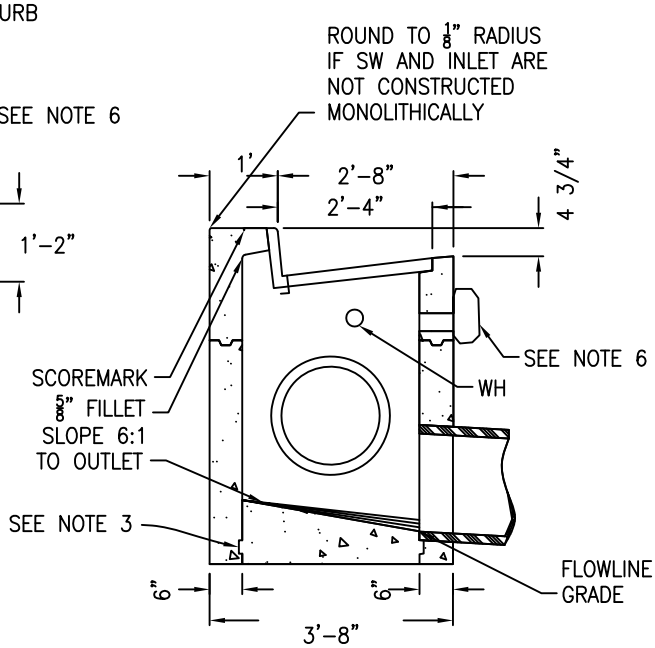

SECTION B-B
NO SCALE

SEE SHEET SD-1.2 FOR NOTES

SCALE: NTS

CITY OF ALBANY, CALIFORNIA	**STANDARD DETAIL**	
APPROVED BY: Ray Chan DATE: DECEMBER 2015	**TYPE "A" INLET**	STD DETAIL No. **SD 1.1**

K:\Standard Specifications and details\Details\CAD Drawings\SD 1 Type A inlet.dwg

NOTES

1. FOR GENERAL NOTES AND DETAILS, SEE STANDARD PLAN SD 9
2. CONSTRUCTION JOINTS ARE OPTIONAL WHERE SHOWN, OTHER LOCATIONS ARE SUBJECT TO THE APPROVAL OF THE PUBLIC WORKS DEPARTMENT. KEY DIMENSIONS – 3/4" x 3".
3. WHEN DIMENSION "H" EXCEED 6'–0", USE A MANHOLE BASE WITH TYPE "A" INLET TOP
4. IF EDGE DRAINS ARE SPECIFIED BY PUBLIC WORKS DEPARTMENT OR SHOWN ON THE PLANS, SEE STANDARD PLAN SD 9 FOR EDGE DRAIN (ED) DETAILS
5. SEE STANDARD PLAN SD 9 FOR WEEPHOLE DRAINAGE DETAILS UNLESS EDGE DRAIN IS SHOWN ON PLANS OR AS SPECIFIRD BY PUBLIC WORKS DEPARTMENT. FOR EDGE DRAIN DETAILS, SEE STANDARD PLAN SD 10.1.
6. SEE STANDARD DETAIL SD 9 FOR WEEPHOLE DETAIL UNLESS EDGE DRAIN IS SHOWN ON PLAN OR SPECIFIED BY PUBLIC WORKS DEPARTMENT. FOR EDGE DRAIN DETAIL SEE SD 10

TABLE

DIMENSION "A" (in)		
UPSTREAM		
CURB GRADE	"A" UPSTREAM	"A" DOWNSTREAM
2% AND LESS	24	24
3%	35	24
4%	48	24
5%	60	24
6%	72	24
7%	84	12
8%	96	12
9%	108	12
10% OR GREATER	120	12

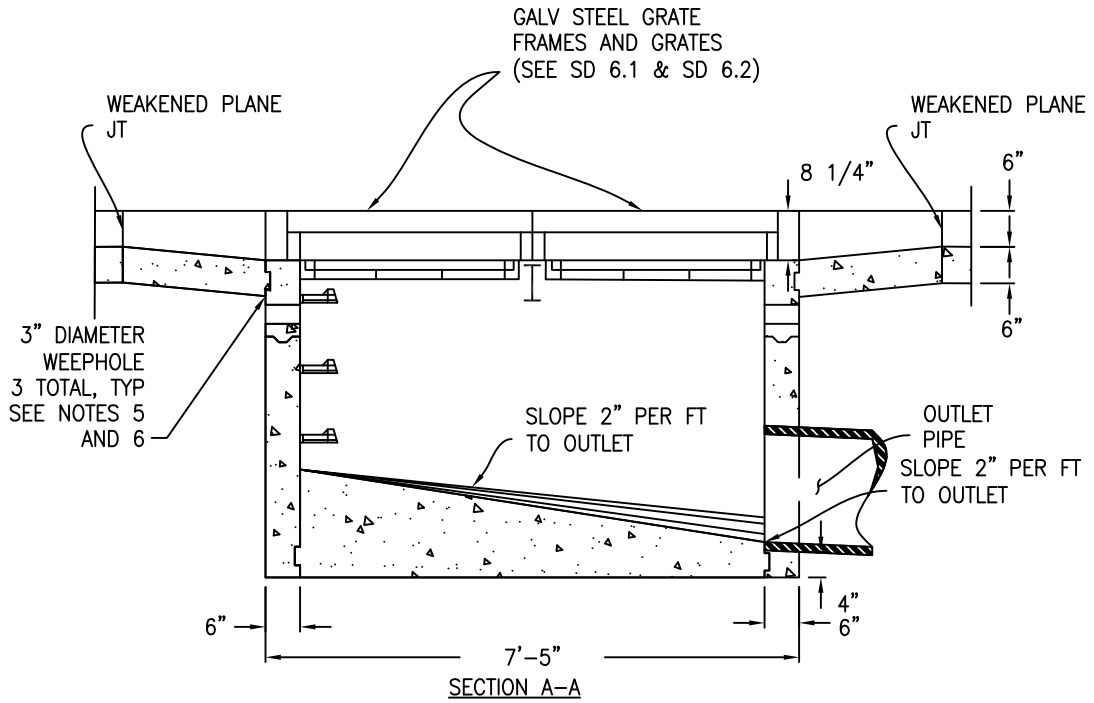

SECTION A-A

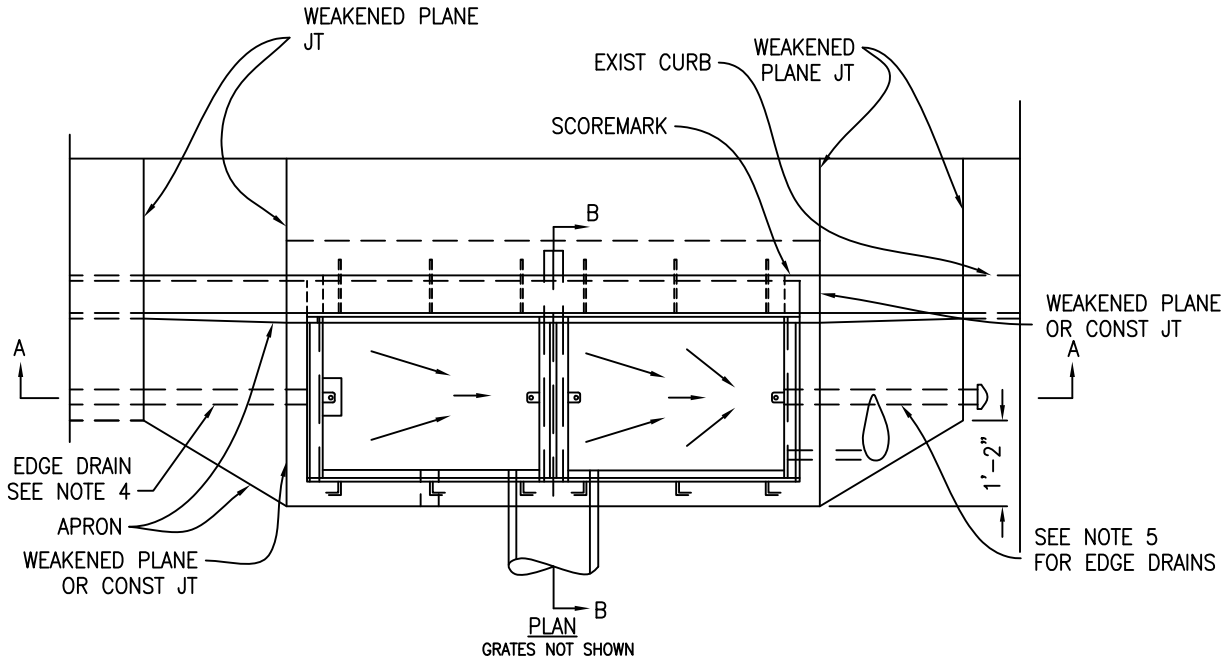

PLAN
GRATES NOT SHOWN

SEE "DETAIL FOR
STEEP CURB SLOPE"

SCALE: NTS

CITY OF ALBANY, CALIFORNIA	STANDARD DETAIL	
APPROVED BY: Ray Chan DATE: DECEMBER 2015	TYPE "B" INLET	STD DETAIL No. SD 2.1

K:\Standard Specifications and details\Details\CAD Drawings\SD 2 Type B inlet.dwg

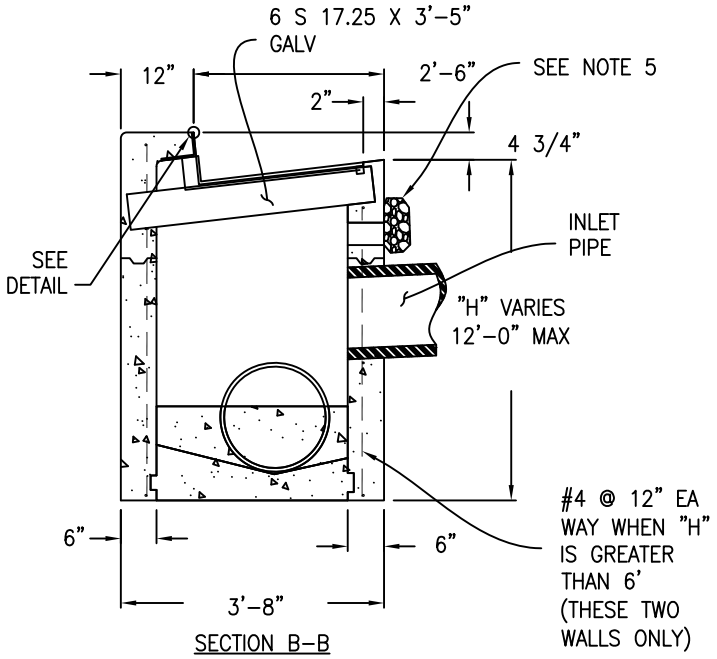

SECTION B-B

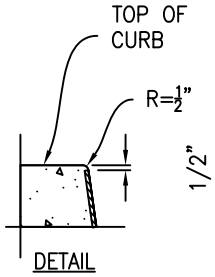

DETAIL

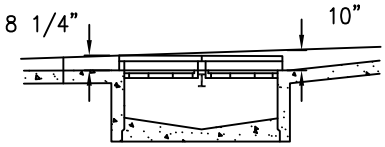

DETAIL FOR STEEP CURB SLOPE

DIMENSIONS "A" (IN)		
UPSTREAM		
CURB GRADE	"A" UPSTREAM	"A" DOWNSTREAM
2% AND LESS	24	24
3%	36	24
4%	48	24
5%	60	24
6%	72	24
7%	84	12
8%	96	12
9%	108	12
10% AND GREATER	120	12

NOTES

1. FOR GENERAL NOTES AND DETAILS, SEE STANDARD PLAN SD 9
2. CONSTRUCTION JOINTS ARE OPTIONAL WHERE SHOWN, OTHER LOCATIONS ARE SUBJECT TO THE APPROVAL OF THE PUBLIC WORKS DEPARTMENT. KEY DIMENSIONS – 3/4" x 3".
3. WHEN DIMENSION "H" EXCEED 12'-0", USE A MANHOLE BASE WITH TYPE "B" INLET TOP
4. IF EDGE DRAINS ARE SPECIFIED BY PUBLIC WORKS DEPARTMENT OR SHOWN ON THE PLANS, SEE STANDARD PLAN SD 10 FOR EDGE DRAIN (ED) DETAILS
5. SEE STANDARD PLAN SD 9 FOR WEEPHOLE DRAINAGE DETAILS UNLESS EDGE DRAIN IS SHOWN ON PLANS OR AS SPECIFIRD BY PUBLIC WORKS DEPARTMENT. FOR EDGE DRAIN DETAILS, SEE STANDARD PLAN SD 10

CITY OF ALBANY, CALIFORNIA	STANDARD DETAIL	
APPROVED BY: Ray Chan DATE: DECEMBER 2015	TYPE "B" INLET - NOTES	STD DETAIL No. SD 2.2

K:\Standard Specifications and details\Details\CAD Drawings\SD 2 Type B inlet.dwg

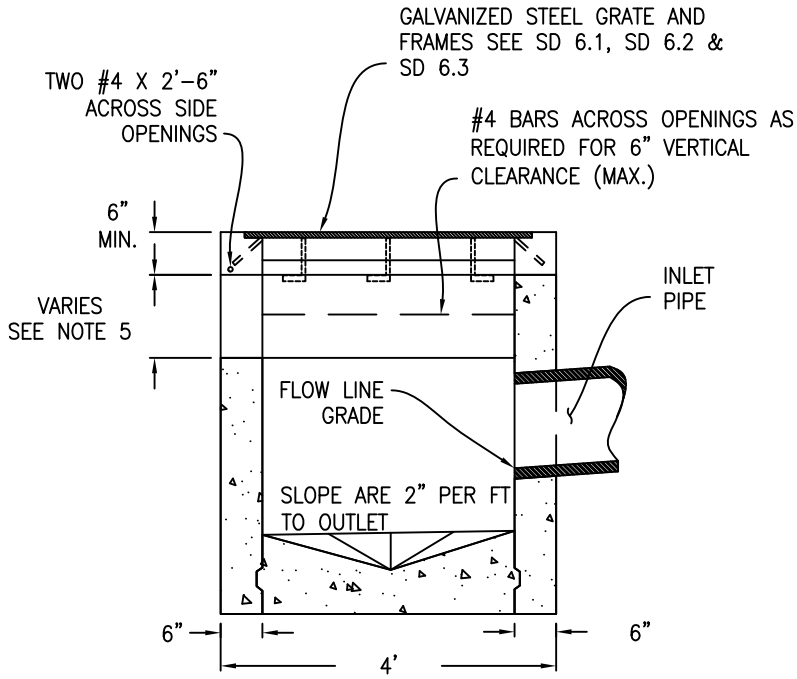

SECTION A–A

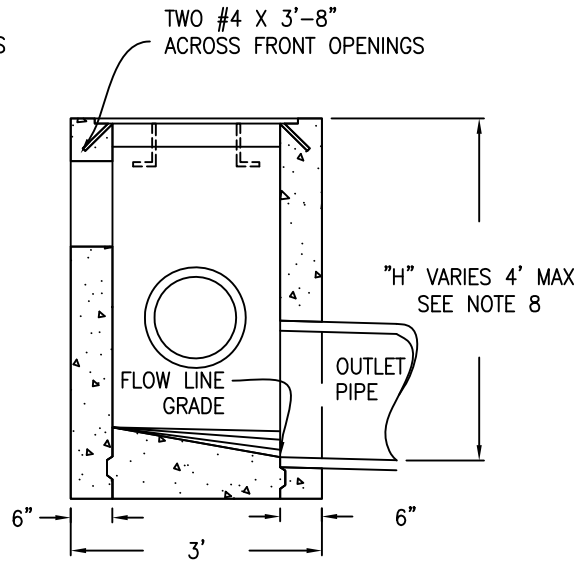

SECTION B–B

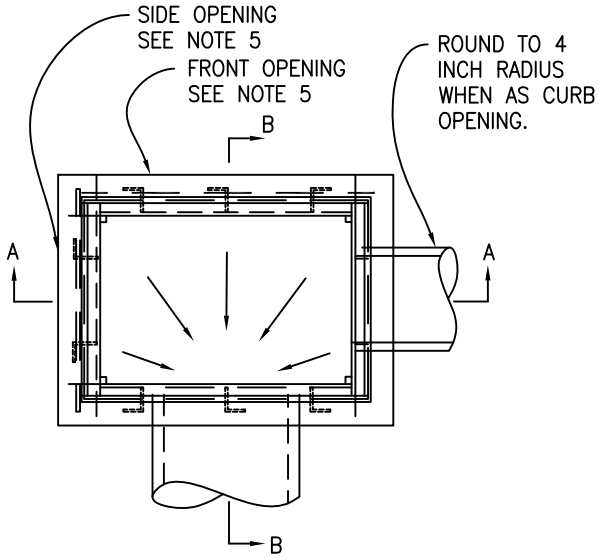

PLAN
GRATE NOT SHOWN

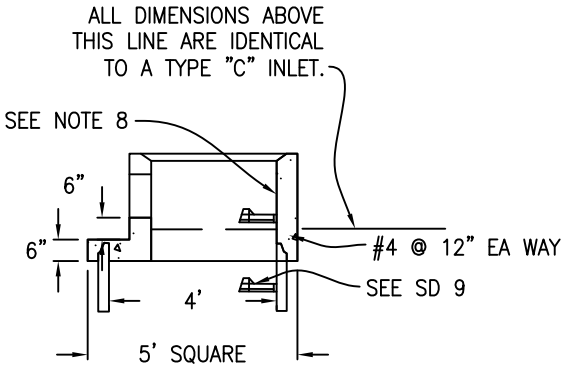

TYPE "C" OPENING ON PRECAST MANHOLE BARREL
REFER TO STANDARD PLAN SD 7

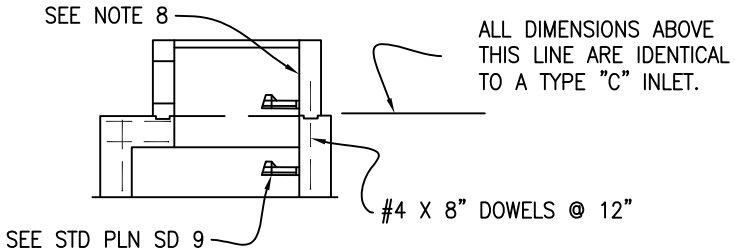

TYPE "C" OPENING ON MANHOLE BASEGRATE
REFER TO STANDARD PLAN SD 7

SCALE: NTS

CITY OF ALBANY, CALIFORNIA		**STANDARD DETAIL**
APPROVED BY: Ray Chan DATE: DECEMBER 2015	**TYPE "C" INLET**	STD DETAIL No. **SD 3.1**

K:\Standard Specifications and details\Details\CAD Drawings\SD 3 Type C Inlet.dwg

NOTES:

1. CONSTRUCTION JOINTS ARE OPTIONAL WHERE SHOWN. OTHER LOCATIONS ARE SUBJECT TO APPROVAL OF THE PUBLIC WORKS DEPARTMENT. KEY DIMENSIONS $\frac{3}{4}$" x 2 $\frac{1}{2}$"
2. CLEARANCE SHALL BE 2" FOR ALL REINFORCING STEEL.
3. FOR INLET GENERAL NOTES AND DETAILS, SEE STANDARD PLAN SD 9
4. LOCATION, FLOWLINE ELEVATION AND SIZE OF OPENING TO BE AS SHOWN ON PLANS, OR AS DIRECTED BY THE PUBLIC WORKS DEPARTMENT.
5. ALL INLETS SHALL BE CONSTRUCTED WITH GRATES. INLETS INSTALLED IN A PEDESTRIAN AREA SHALL BE TYPE "D".
6. PRECAST INLET CONFORMING TO SANTA ROSA CAST PRODUCT CO. DRAWING NO. TYPE C OR EQUIVALENT, CAN BE SUBSTITUTED FOR CAST IN-PLACE INLET UNLESS OTHERWISE SPECIFIED IN PROJECT SPECIAL PROVISIONS.
7. MAXIMUM DEPTH FOR TYPE "C" INLET SHALL BE 4'. FOR DEPTHS GREATER THAN 4' USE A MANHOLE BASE WITH A TYPE "C" TOP. THE TYPE "C" INSIDE WALL WITH STEPS SHALL BE FLUSHWITH MANHOLE BASE INSIDE WALL.
8. DETAILS APPLY TO ALL METAL, PLASTIC AND CONCRETE PIPE.

SCALE: NTS

CITY OF ALBANY, CALIFORNIA	STANDARD DETAIL	
APPROVED BY: Ray Chan DATE: DECEMBER 2015	TYPE "C" INLET - NOTES	STD DETAIL No. SD 3.2

K:\Standard Specifications and details\Details\CAD Drawings\SD 3 Type C Inlet.dwg

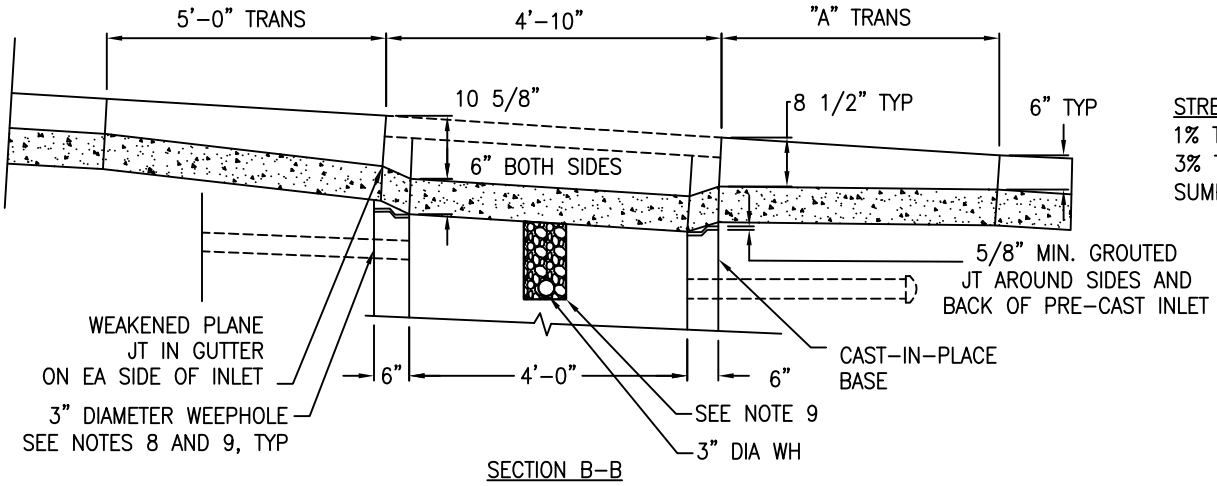

STREET GRADE	"A"
1% TO 3%	4'-0"
3% TO 6%	2'-0"
SUMP	5'-0"

SECTION B-B

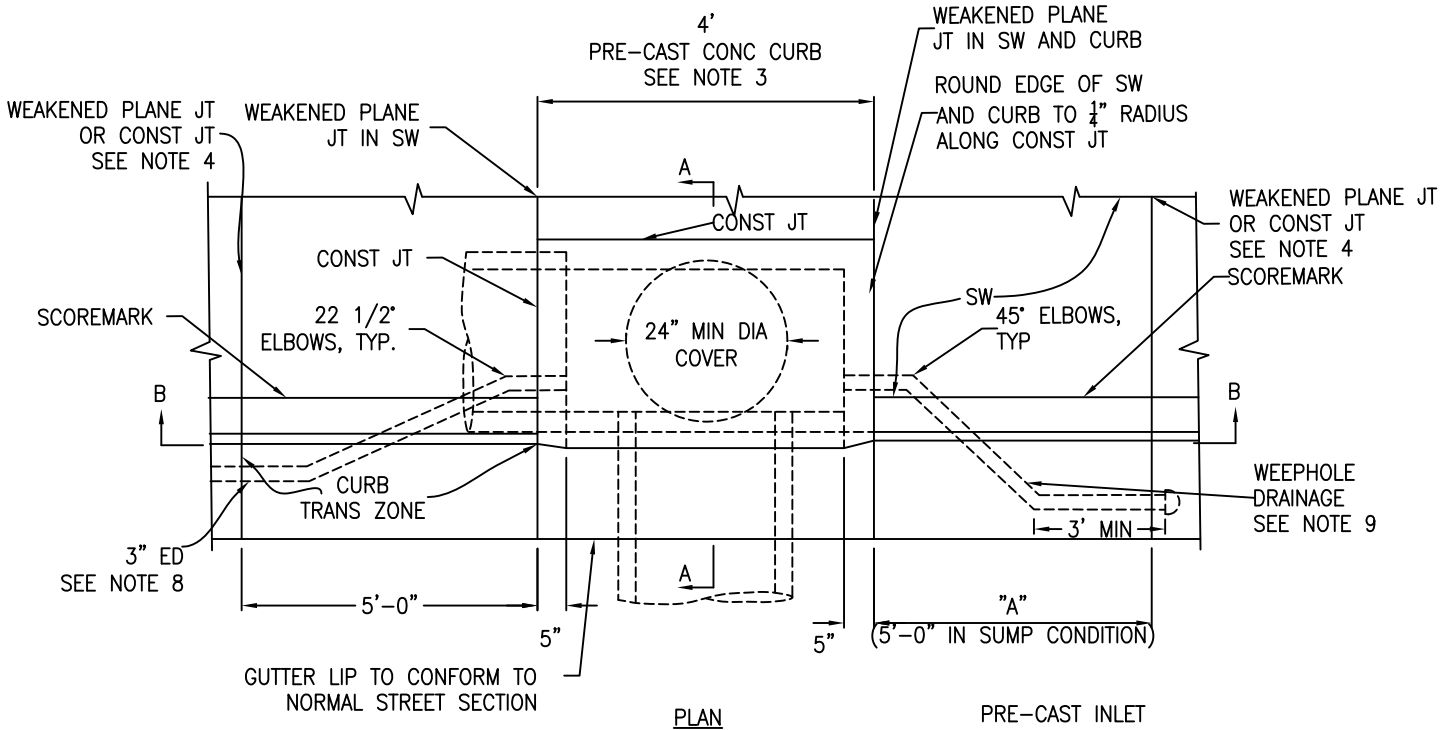

PLAN

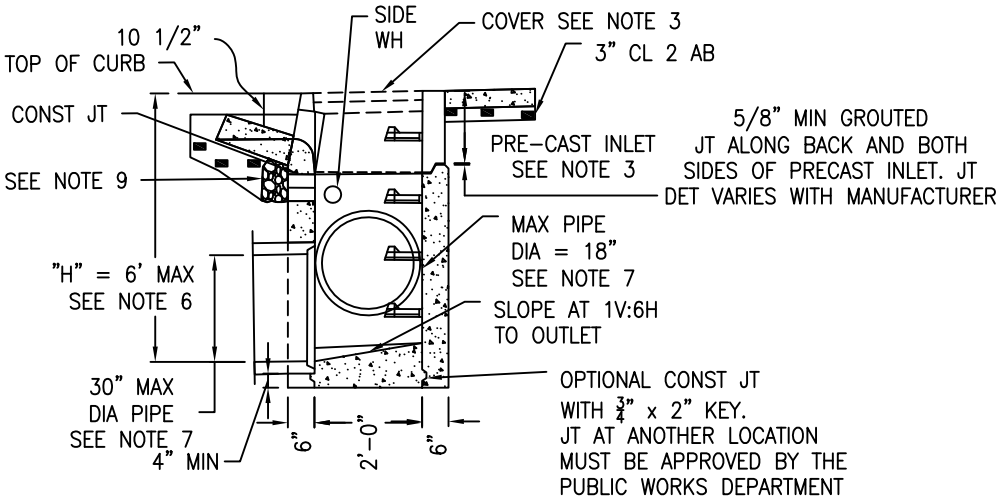

SECTION A-A

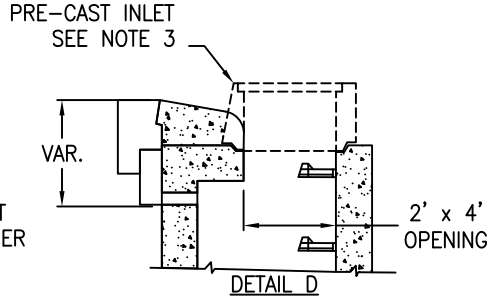

DETAIL D
PRE-CAST INLET ON TYPE II MANHOLE SEE NOTE 6

SCALE: NTS

CITY OF ALBANY, CALIFORNIA		**STANDARD DETAIL**
APPROVED BY: Ray Chan DATE: DECEMBER 2015	**TYPE "D" INLET**	STD DETAIL No. **SD 4.1**

K:\Standard Specifications and details\Details\CAD Drawings\SD 4 Type D Inlet.dwg

NOTES:

1. FOR INLET GENERAL NOTES AND DETAILS, SEE STANDARD PLAN SD 9.
2. TYPE D INLET NOT PERMITTED WHEN STREET GRADE EXCEEDS 6%. IF GRADE EXCEEDS 6% USE TYPE E INLET
3. PRECAST CONCRETE CURB INLET SHALL BE CENRAL PRECAST MODEL 4 A OR CHRISTY CONCRETE PRODUCTS MODEL U-37, OR EQUIVALENT, AS APPROVED BY THE PUBLIC WORKS DEPARTMENT. SEE MANUFACTURER'S CATALOG FOR DETAILS OF INLET AND CIRCULAR COVER NOT SHOWN ON THIS PLAN. COVERS SHALL HAVE A PICK HOLE FOR ACCESS.
4. WHEN CURB AND SIDEWALK ARE EXTRUDED, CONSTRUCTION JOINTS SHALL BE PROVIDED AT LOCATION AS SHOWN IN PLAN VIEW.
5. CURB AND SIDEWALK SHALL BE CONSTRUCTED MONOLITHICALLY.
6. IF "H" EXCEEDS 6'-0", CONSTRUCT PRECAST INLET ON A TYPE II MANHOLE BASE AS SHOWN IN DETAIL "D" ON THIS PLAN. SEE STANDARD PLANS SD 7 AND SD 8 FOR MANHOLE AND TOP SLAB DETAILS.
7. A PIPE SHALL NOT ENTER THE INLET THROUGH A CORNER. IF PIPE EXCEEDS
8. IF EDGE DRAINS ARE SPECIFIEF BY PUBLIC WORKS DEPARTMENT OR SHOWN ON THE PLANS, SEE STANDARD PLAN SD 10 FOR EDGE DRAIN (ED) DETAILS.
9. SEE STANDARD PLAN SD 9 FOR WEEPHOLE DRAINAGE DETAILS UNLESS EDGE DRAIN IS SHOWN ON PLANS OR AS SPECIFIED BY PUBLIC WORKS DEPARTMENT. FOR EDGE DRAIN DETAILS, SEE STANDARD PLAN SD 10.

SCALE: NTS

CITY OF ALBANY, CALIFORNIA	STANDARD DETAIL	
APPROVED BY: Ray Chan DATE: DECEMBER 2015	TYPE "D" INLET - NOTES	STD DETAIL No. SD 4.2

K:\Standard Specifications and details\Details\CAD Drawings\SD 4 Type D Inlet.dwg

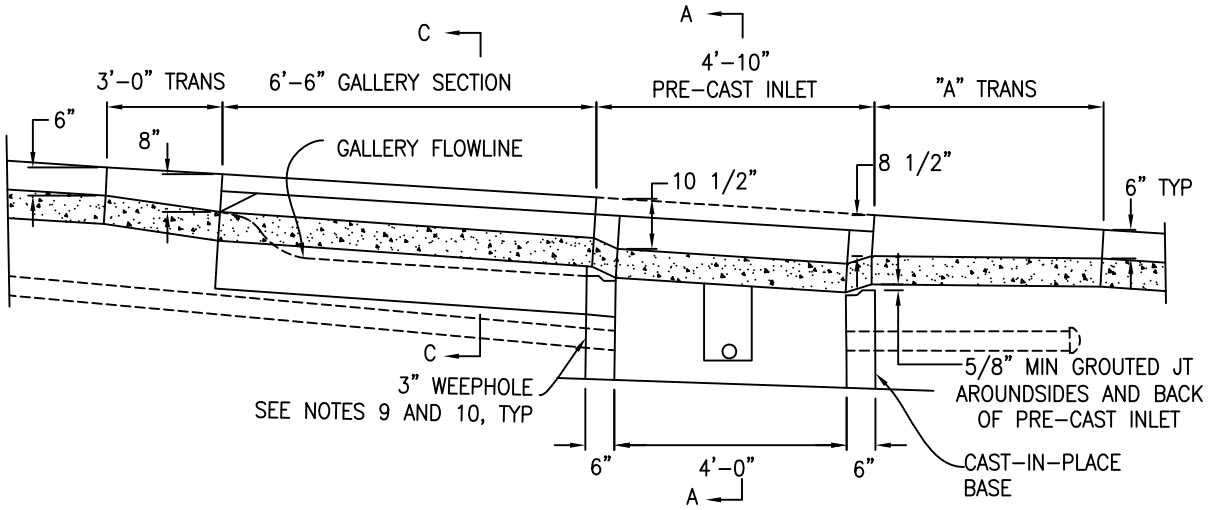

SECTION B-B

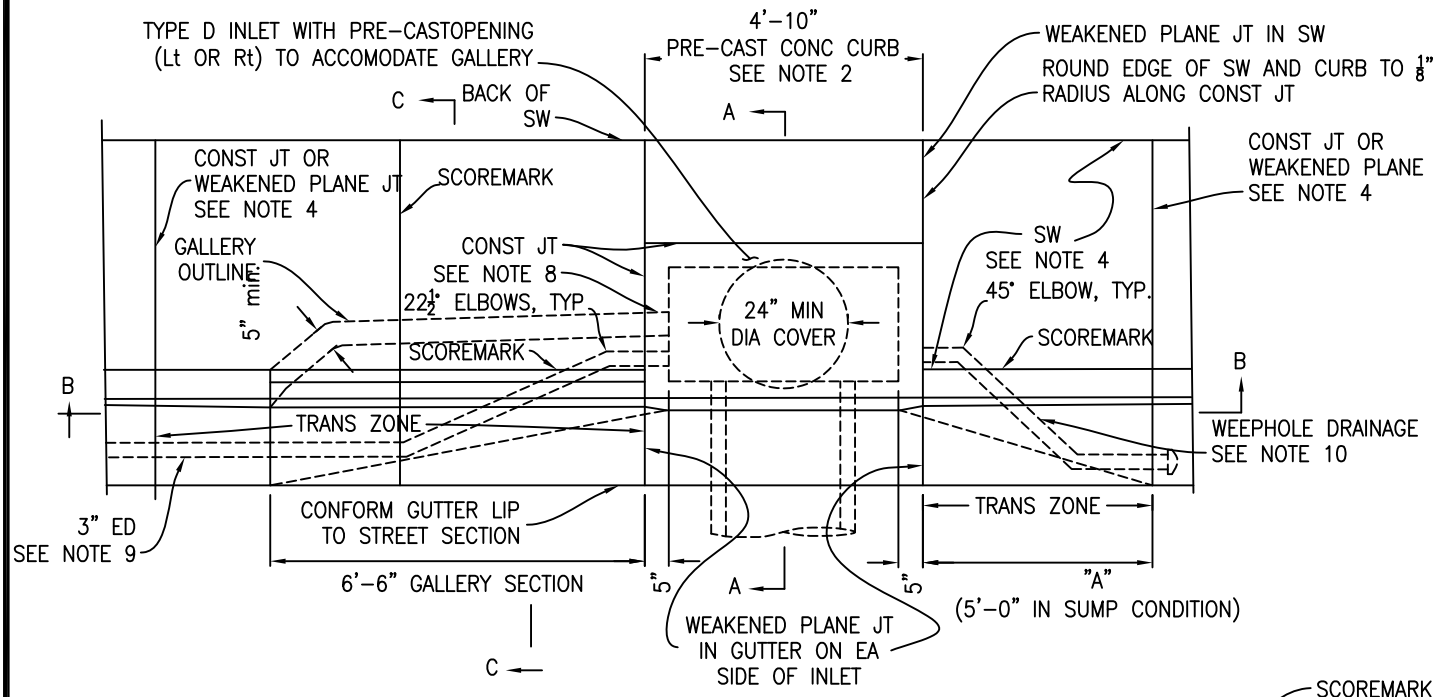

PLAN

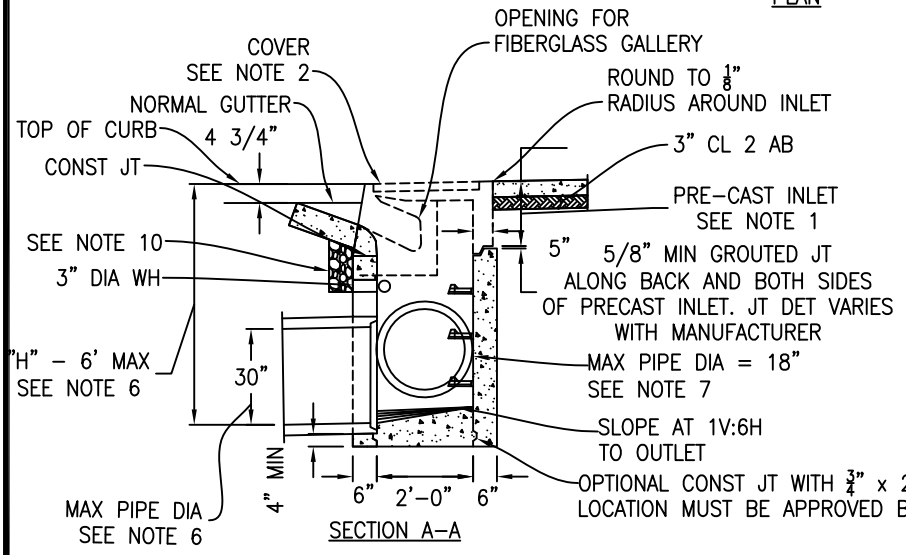

SECTION A-A

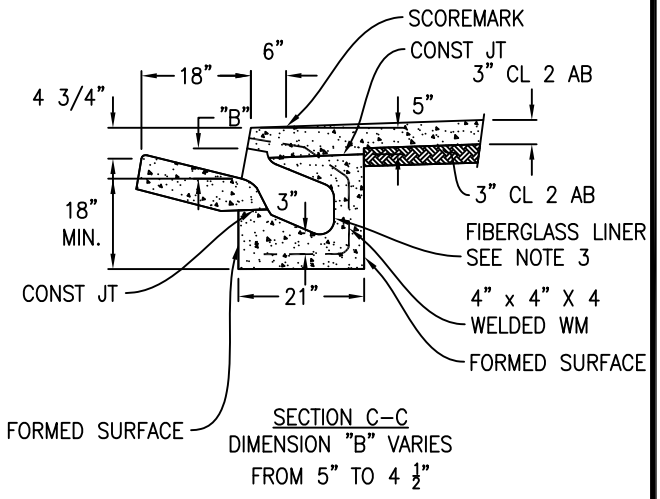

SECTION C-C
DIMENSION "B" VARIES
FROM 5" TO 4 1/2"

SCALE: NTS

CITY OF ALBANY, CALIFORNIA		**STANDARD DETAIL**
APPROVED BY: *Ray Chan*	**TYPE "E" INLET**	STD DETAIL No.
DATE: DECEMBER 2015		**SD 5.1**

K:\Standard Specifications and details\Details\CAD Drawings\SD 5 Type E Inlet.dwg

NOTES:

1. FOR INLET GENERAL NOTES AND DETAILS, SEE STANDARD PLAN SD 9.
2. THE PRE-CAST CONCRETE CURB INLET SHALL BE CENTRAL PRECAST MODEL MODEL 4A OR CHRISTY CONCRETE PROD. MODEL U-37, OR EQUIVALENT, AS APPROVED BY THE PUBLIC WORKS DEPARTMENT. SEE MANUFACTURER'S CATALOG FOR DETAILS OF INLET AND CIRCULAR COVER NOT SHOWN ON THIS PLAN. COVERS SHALL HAVE A HOLE FOR ACCESS.
3. FIBERGLASS LINER FOR GALLERY SHALL BE CENTRAL PRECAST PELICAN GALLERY MODEL 6Y, OR APPROVED EQUIVALENT.
4. WHEN CURB AND SIDEWALK ARE EXTRUDED, CONSTRUCTION JOINTS SHALL PROVIDED AT LOCATION AS SHOWN IN PLAN VIEW.
5. CURB AND GALLERY SECTION AND SIDEWALK SHALL BE CONSTRUCTED MONOLITHICALLY.
6. IF "H" EXCEEDS 6'-0", CONSTRUCT PRE-CAST INLET ON A TYPE II MANHOLE BASE AS SHOWN IN DETAIL D ON STANDARD PLAN SD 4, TYPE D INLET. SEE STANDARD PLANS SD 7 AND SD 8 FOR MANHOLE BASE AND TOP SLAB DETAILS.
7. A PIPE SHALL NOT ENTER THE INLET THROUGH A CORNER. IF PIPE EXCEEDS MAXIMUM DIAMETER ALLOWED OR THE SKEW ANGLE PREVENTS THE PIPE OPENING FROM BEING MADE IN A SINGLE WALL, CONSTRUCT A TYPE II MANHOLE BASE TO ACCEPT STORM DRAIN LINES
8. BLOCK OUT PORTION OF CAST-IN-PLACE BASE AS REQUIRED TO PERMIT CONSTRUCTION OF GALLERY TO INSIDE FACE OF BASE, AND FILL IN WHEN GALLERY CONCRETE IS PLACED.
9. IF EDGE DRAINS ARE SPECIFIED BY PUBLIC WORKS DEPARTMENT OR SHOWN ON THE PLANS, SEE STANDARD PLAN SD 10 FOR EDGE DRAIN (ED) DETAILS.
10. SEE STANDARD PLAN SD 9 FOR WEEPHOLE DRAINAGE DETAILS UNLESS EDGE DRAIN IS SHOWN ON PLANS OR AS SPECIFIED BY PUBLIC WORKS DEPARTMENT. FOR EDGE DRAIN DETAILS, SEE STANDARD PLAN SD 10

SCALE: NTS

CITY OF ALBANY, CALIFORNIA	STANDARD DETAIL	
APPROVED BY: Ray Chan DATE: DECEMBER 2015	TYPE "E" INLET - NOTES	STD DETAIL No. SD 5.2

K:\Standard Specifications and details\Details\CAD Drawings\SD 5 Type E Inlet.dwg

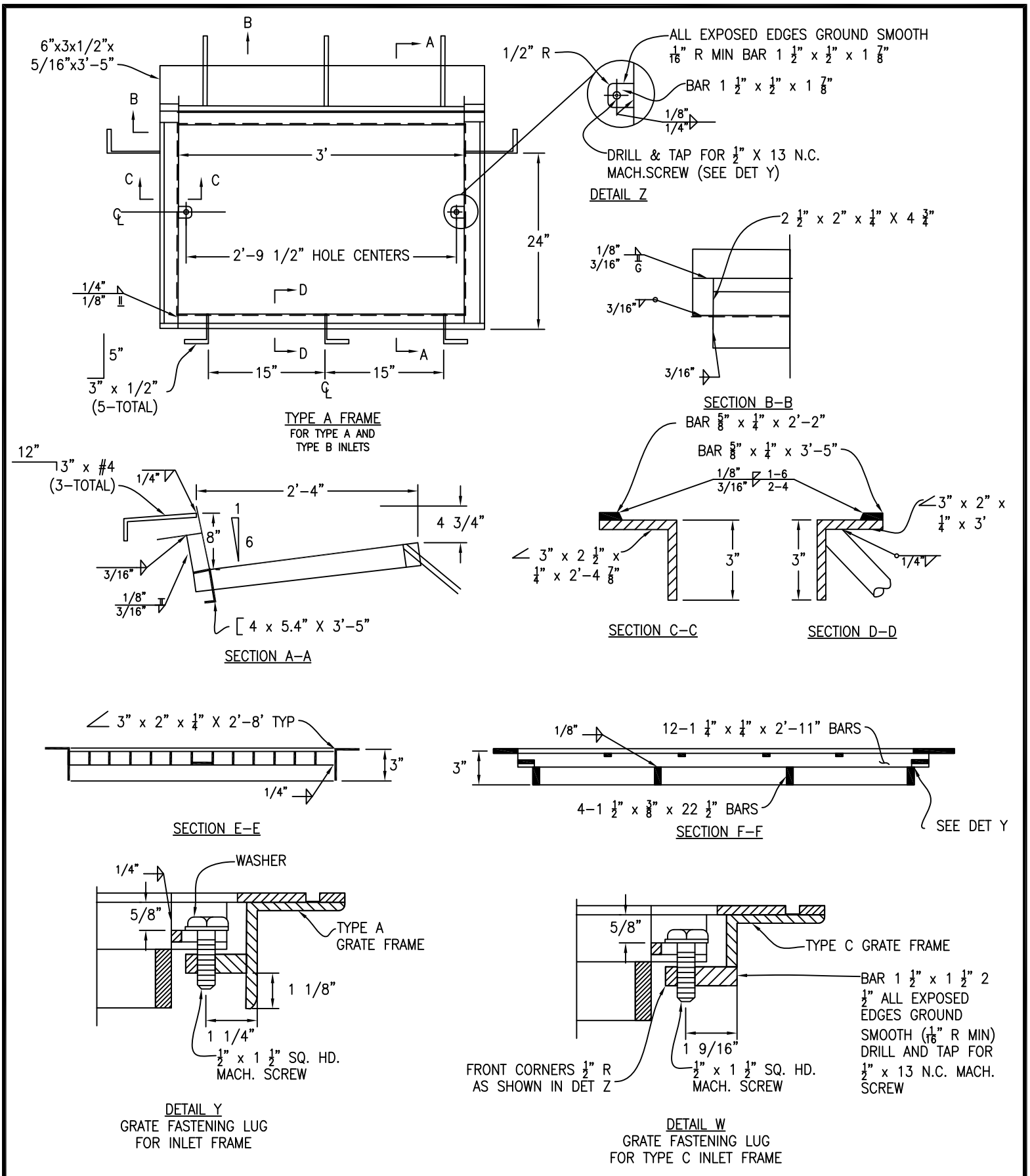

SCALE: NTS

CITY OF ALBANY, CALIFORNIA		STANDARD DETAIL
APPROVED BY: Ray Chan DATE: DECEMBER 2015	INLET FRAME AND GRATE FOR TYPE "A", "B" & "C"	STD DETAIL No. SD 6.1

K:\Standard Specifications and details\Details\CAD Drawings\SD 6 Inlet Frame and Grate.dwg

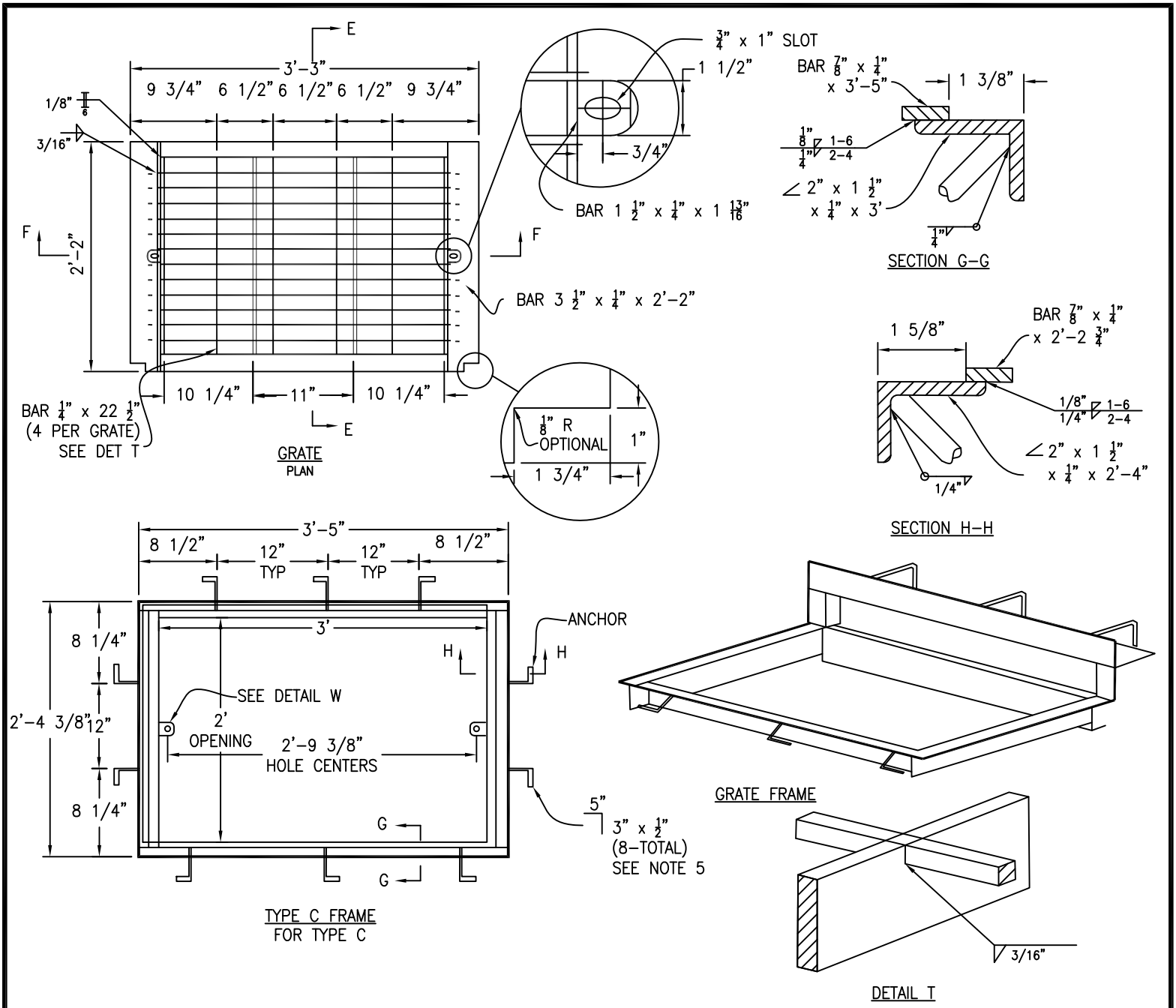

NOTES:

1. ALL MATERIALS, FABRICATION, GALVANIZING, AND SURFACE TREATMENT SHALL BE IN ACCORDANCE WITH SECTION 75 AND 95 OF THE CALIFORNIA DEPARTMENT OF TRANSPORTATION'S STANDARD SPECIFICATIONS.
2. FRAMES AND COVERS SHALL FIT TOGETHER WITHOUT ROCKING.
3. FABRICATOR SHALL SUPPLY FASTENING SCREWS WITH FRAMES.
4. WEIGHTS: TYPE A GRATE FRAME 88 LBS., GRATE 86 LBS..
5. 1/2" x 5 1/4" NELSON-TYPE STUDS MAY BE USED IN LIEU OF 1/2" DIA x 5" 3" ANCHORS.
6. TYPE A, B AND C INLETS HAVE BEEN REPLACED WITH TYPE G, H AND J INLETS RESPECTIVELY. THESE DETAILS ARE TO BE USED FOR REPAIR MAINTENANCE OF ESISTING INLETS, NO NEW CONSTRUCTION.

SCALE: NTS

CITY OF ALBANY, CALIFORNIA	STANDARD DETAIL	
APPROVED BY: Ray Chan DATE: DECEMBER 2015	INLET FRAME AND GRATE FOR TYPE "A", "B" & "C"	STD DETAIL No. SD 6.2

K:\Standard Specifications and details\Details\CAD Drawings\SD 6 Inlet Frame and Grate.dwg

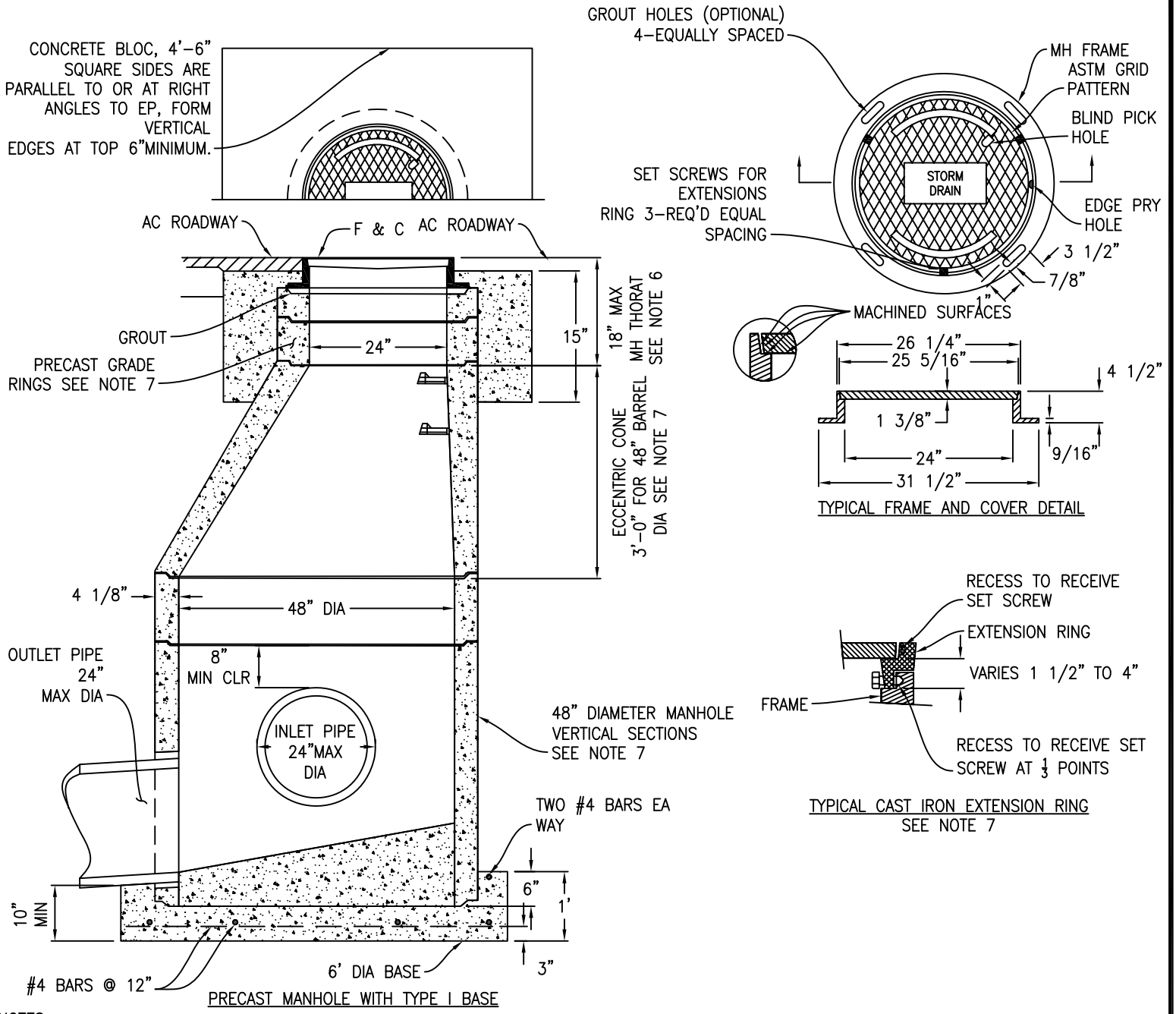

NOTES:

1. FOR INLET GENERAL NOTES AND DETAILS, SEE STANDARD PLAN SD 9.
2. ALL CONCRETE JOINTS SHALL BE CLEANED WETTED, AND MORTARED PRIOR TO SETTING NEXT SECTION. JOINTS SHALL THEN BE PATCHED, TROWELED, AND BRUSHED SMOOTH.
3. FRAME AND EXTENSION RINGS MUST BE SECURED BY CONCRETE BLOCK, UNLESS APPROVED OTHERWISE BY THE PUBLIC WORKS DEPARTMENT.
4. MANHOLE COVER FRAME SHALL BE ADJUSTED TO CONFORM TO GRADE AND CROSS SLOPE OF PAVEMENT
5. MANHOLE FRAME AND COVER SHALL BE PHOENIX IRON (OAKLAND) MODEL P- 1090 OR SOUTH BAY FOUNDRY No. 1900 CPH OR APPROVED EQUIVALENT.
6. USE OF PRECAST GRADE RINGS ARE LIMITED BY 18" MAXIMUM MANHOLE THROAT LENGTH. CAST IRON EXTENSION RINGS ARE ALLOWED FOR CONFORMS TO PAVEMENT OVERLAYS ONLY.
7. THE PRECAST COMPONENTS SHALL CONFORM TO THE CENTRAL PRECAST (US CONCRETE PRECAST GROUP NORTHERN CALIFORNIA) DRAWING Nos. 20-48C,2048V AND 20-48 EC, OR EQUIVALENT.

SCALE: NTS

CITY OF ALBANY, CALIFORNIA	STANDARD DETAIL	
APPROVED BY: Ray Chan DATE: DECEMBER 2015	PRECAST MANHOLE, TYPE I BASE, FRAME & COVER	STD DETAIL No. SD 7

K:\Standard Specifications and details\Details\CAD Drawings\SD 7 Precast Manhole , Type I Base, Frame and Cover.dwg

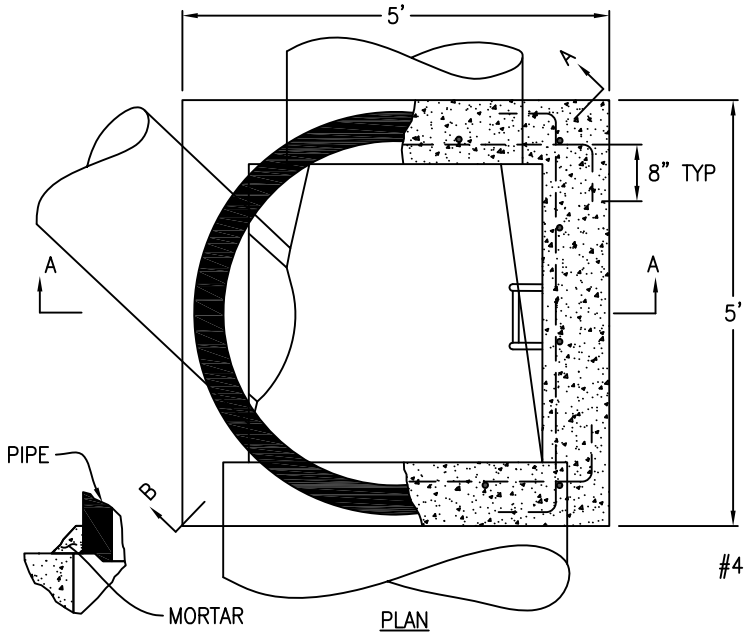

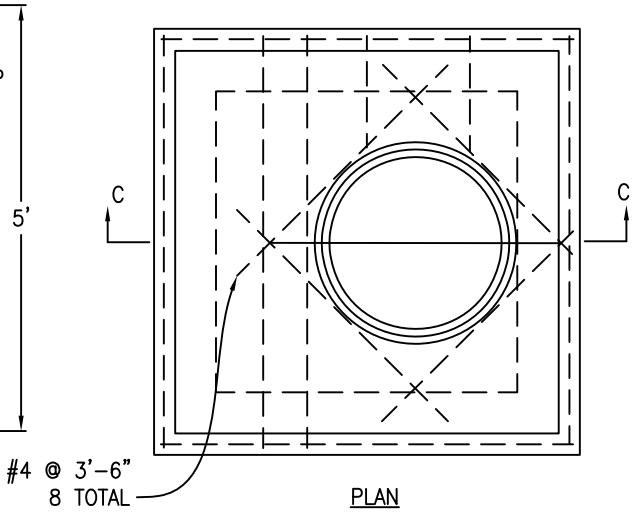

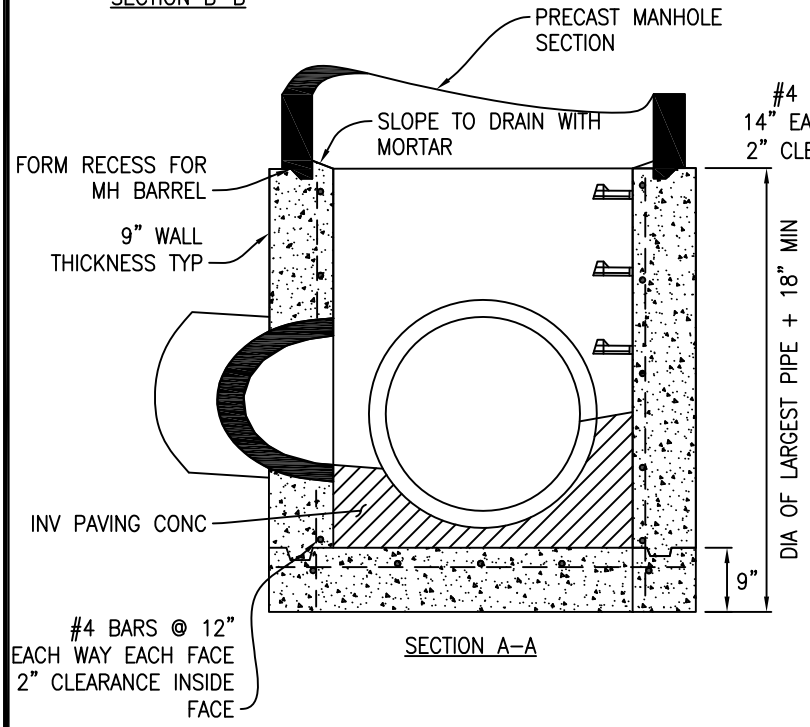

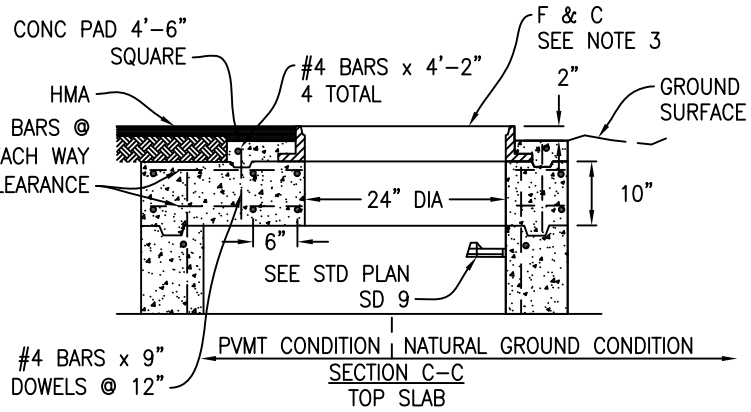

USE TOP SLAB:

1. WHEN THERE IS INSUFFICIENT DEPTH BETWEEN THE TOP OF THE MANHOLE BASE FINISH GRADE FOR PRECAST MANHOLE ECCENTRIC CONE SECTION PER STANDARD PLAN SD 7

NOTES

1. FOR MANHOLE GENERAL NOTES AND DETAILS, SEE STANDARD PLAN SD 9
2. CONSTRUCTION JOINTS ARE OPTIONAL WHERE SHOWN. OTHER LOCATIONS ARE SUBJECT TO APPROVAL BY THE PUBLIC WORKS DEPARTMENT. KEY DIMENSIONS ARE 1 $\frac{1}{2}$" x 3"
3. FOR DETAILS OF MANHOLE FRAME AND COVER, SEE STANDARD PLAN SD 7. ORIENT FRAME DIRECTLY ABOVE STEPS.

SCALE: NTS

CITY OF ALBANY, CALIFORNIA	STANDARD DETAIL	
APPROVED BY: Ray Chan DATE: DECEMBER 2015	TYPE II MANHOLE BASE	STD DETAIL No. SD 8

K:\Standard Specifications and details\Details\CAD Drawings\SD 8 Type II Manhole Base.dwg

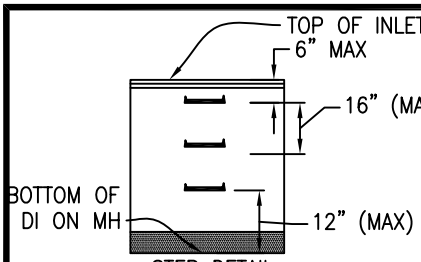

STEP DETAIL
SEE NOTE 2

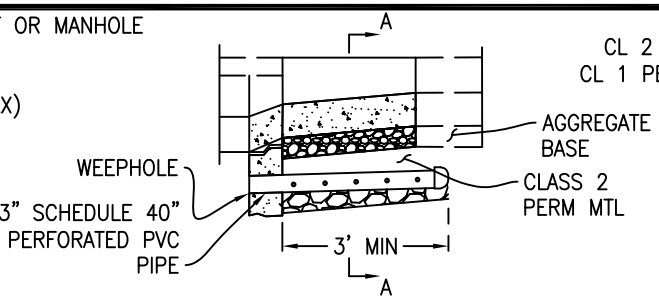

STANDARD FRONTSIDE WEEPHOLE DETAIL
SEE NOTE 3

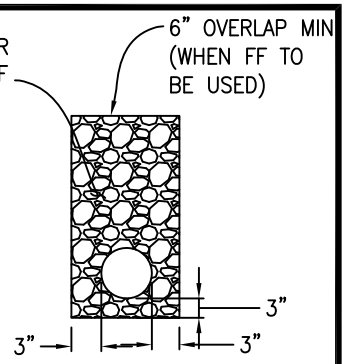

EDGE DRAIN TRENCH DETAIL

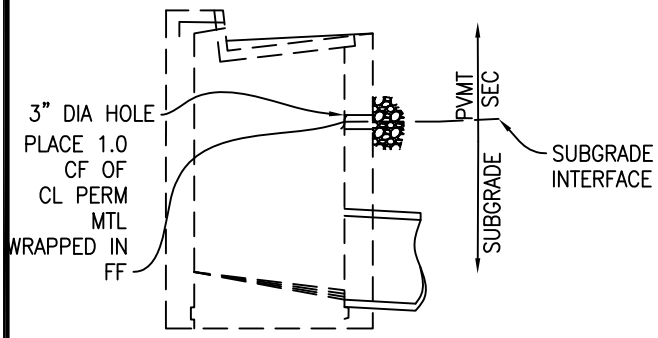

STANDARD FRONTSIDE WEEPHOLE DETAIL
SEE NOTE 3

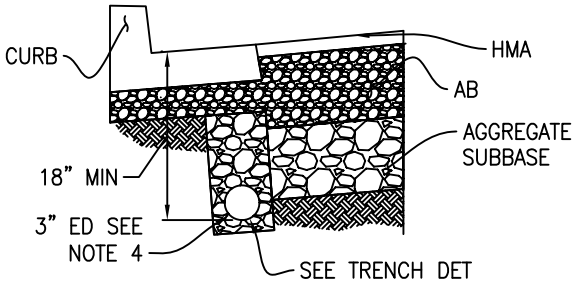

SECTION A–A

NOTES

1. ALL INLETS SHALL HAVE THE CITY APPROVED "ANTI–POLLUTION" PLASTIC MARKER ATTACHED TO THE INLET AS DIRECTED BY THE INSPECTOR OR RESIDENT ENGINEER. THE MARKER SHALL BE APPLIED FOLLOWING MANUFACTURER'S RECOMMENDATIONS. PCC SURFACES SHALL BE MECHANICALLY CLEANED JUST PRIOR TO ATTACHING THE MARKER. THE MARKER AND ADHESIVE MAY BE FURNISHED BY THE PUBLIC WORKS DEPARTMENT, CHECK YOUR PERMIT CONDITIONS OR CONTRACT SPECIAL PROVISIONS.

2. STEPS SHALL BE REINFORCED POLYPROPYLENE PLASTIC, M.A. INDUSTRIES, INC. No, PS2–PF OR EQIVALENT. STEPS TO BE CAST IN PLACE OR PRESS FITTED INTO HOLES PER MANUFACTURER. INSTALL STEPS WITH LOWEST RUNG 12" MAXIMUM ABOVE THE FLOOR AND HIGHEST RUNG NOT MORE THAN 6" BELOW TOP INLET. THE SPACING BETWEEN STEPS SHALL NOT EXCEED 16"AND SHALL BE UNIFORM THROUGHOUT THE LENGTH OF THE WALL. NO STEPS REQUIRED WHERE DISTANCE FROM FLOOR OF INLET TO TOP OF GRATE IS 4' OR LESS. SEE "STEP DETAIL".

3. WEEPHOLE ELEVATION VARIES DEPENDING ON THE DEPTH OF THE ADJOINING PAVEMENT SECTION. IT SHALL BE AT, OR SLIGHTLY BELOW, THE PAVEMENT SECTION SUBGRADE ELEVATION WITH A MINIMUM DEPTH OF 18" BELOW THE CURB INLET GRATE ELEVATION. THE SIDE WEEPHOLE DETAIL SHALL BE USED AT ALL "SUMP" LOCATION. EDGE DRAIN STANDARD PLAN (SD 10), OR SIDE WEEP WEEPHOLE DRAINS DETAIL AT OTHER LOCATIONS MAY BE REQUIRED AS SHOWN ON THE CONSTRUCTION PLANS OR BY THE PUBLIC WORKS DEPARTMENT. WHERE THE SIDE WEEPHOLE DETAIL OR EDGE DRAINS ARE NOT REQUIRED, THESE WEEPHOLES SHALL CONFORM TO THE FRONT FACE WEEPHOLE DETAILS SHOWN ON THIS PLAN.

4. 3" EDGE DRAIN PER STANDARD PLAN SD 10 WHEN SHOWN ON THE PLANS OR SPECFIED BY THE PUBLIC WORKS DEPARTMENT.

5. CONCRETE SHALL CONFORM TO SECTION 90, "CONCRETE", OF CALIFORNIA DEPARTMENT OF TRANSPORTATION'S STANDARD SPECIFICATIONS AND THE FOLLOWING.
   A. CONSTRUCTION JOINTS SHOWN ON STANDARD PLANS ARE PERMITTED WHEN TOP PORTION OF INLET IS TO BE CONSTRUCTED MONOLITHICALLY WITH CURB AND SIDEWALK. KEY DIMENSION – $\frac{3}{4}$" x 3"
   B. CONCRETE CONSTRUCTION JOINT SHALL BE LOCATED 12" TO 18" ELOW TOP OF CURB ELEVATION.
   C. CONCRETE ABOVE CONSTRUCTION JOINT SHALL CONTAIN A MINIMUM OF 505 LBS OF CEMENTIOUS MATERIAL PER CUBIC YARD, 1" MAXIMUM AGGREGATE GRADING.
   D. CONCRETE BELOW CONSTRUCTION JOINT SHALL CONTAIN A MINIMUM OF 590 LBS OF CEMENTIOUS MATERIALS PER CUBIC YARD, 1" MAXIMUM AGGREGATE GRADING.
   E. WHEN INLET IS CONSTRUCTED AS A SINGLE UNIT CONCRETE SHALL COMPLY WITH ITEM D, DESCRIBED ABOVE.

6. UNLESS OTHERWISE NOTED ON STANDARD PLANS ALL CONCRETE SHALL CONTAIN NOT LESS THAN 590 LBS OF CEMENTIOUS MATERIAL PER CUBIC YARD, 1" MAXIMUM GRADING IN CONFORMANCE WITH SECTION 90, "CONCRETE" OF CALIFORNIA DEPARTMENT OF TRANSPORTATION'S STANDARD SPECIFICATIONS. ONVERT PAVING CONCRETE SHALL CONTAIN NOT LESS THAN 505 LBS PER CUBIC YARD OF CEMENTIOUS MATERIAL, 1" MAXIMUM GRADING, IN CONFORMANCE WITH SAID STANARD SPECIFICATIONS.

SCALE: NTS

CITY OF ALBANY, CALIFORNIA	STANDARD DETAIL	
APPROVED BY: Ray Chan DATE: DECEMBER 2015	STANDARD INLET/MANHOLE PLAN GENERAL NOTES	STD DETAIL No. SD 9

K:\Standard Specifications and details\Details\CAD Drawings\SD 9 Inlet General Notes.dwg

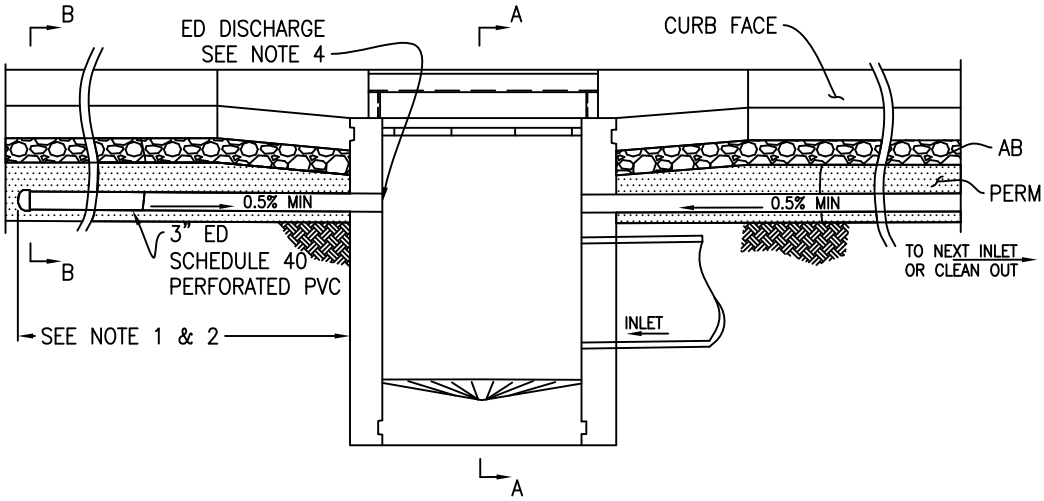

EDGE DRAIN SECTION VIEW

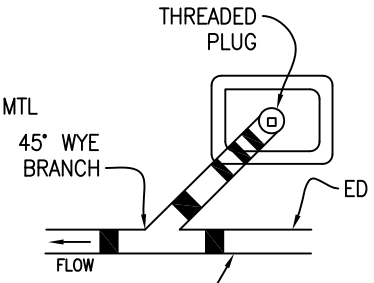

PLAN

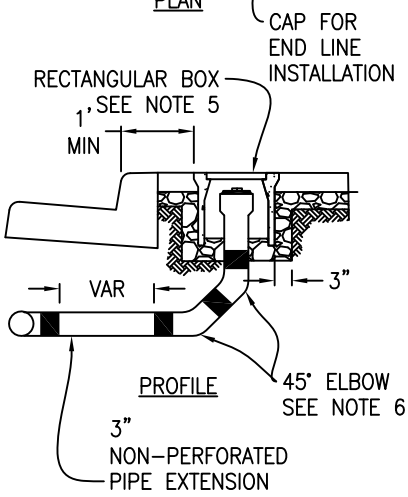

PROFILE

IN-LINE CLEANOUT

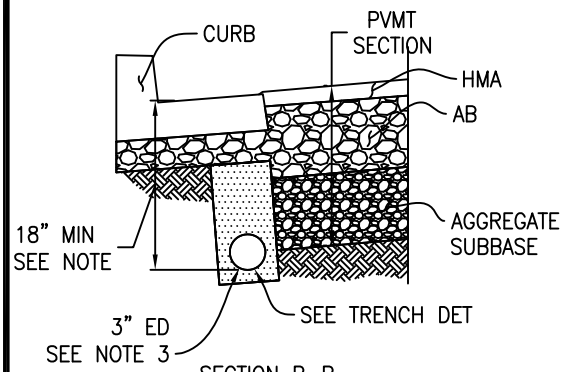

SECTION B–B

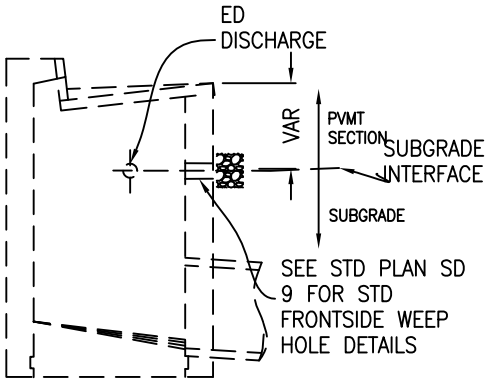

SECTION A–A

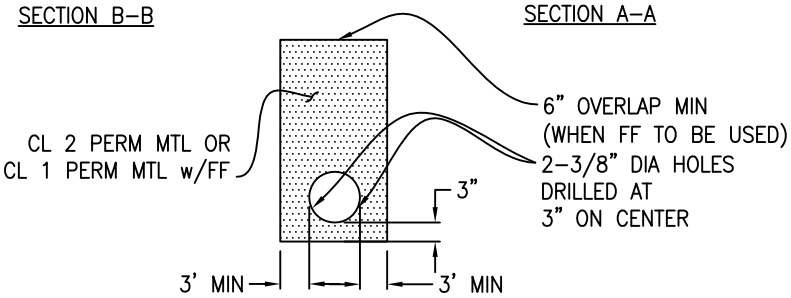

EDGE DRAIN TRENCH DETAIL

NOTES

1. EDGE DRAINS SHALL BE INSTALLED TO THE LENGTHS (L) AS DIRECTED BY THE PUBLIC WORKS DEPARTMENT OR AS SHOWN ON PROJECT CONSTRUCTION PLANS.

2. PLACE CAP AT THE END WHEN DIMENSION "L" GREATER THAN 250', PLACE CLEANOUT EVERY 250' AND A CLEANOUT ATH END OF EDGE DRAIN.

3. EDGE DRAIN PIPE SHALL CONFORM TO SECTION 68, "SUBSURFACE DRAINS, " OF CALIFORNIA DEPARTMENT OF TRANSPORTATION STANDARD SPECIFICATIONS, OR AS APPROVED BY THE PUBLIC WORKS DEPARTMENT.

4. EDGE DRAIN ELEVATION VARIES DEPENDING ON DEPTH OF THE ADJOINING PAVEMENT SECTION. IT SHALL BE AT, OR SLIGHTLY BELOW, THE PAVEMENT SECTION SUBGRADE ELEVATION WITH A MINIMUM

5. RECTANGULAR BOX ($10\frac{5}{8}$" x $17\frac{1}{2}$") SHALL BE CHRISTY, MODEL B9 OR EQUIVALENT.

6. NO SINGLE ELBOW SHALL BE INSTALLED WITH A BEND GREATER THAN 45 DEGREES.

7. ALTERNATE DESIGNS: OTHER PROPRIETARY SUBDRAIN PRODUCTS SUCH AS "MULTI-FLOW DRAINAGE SYSTEMS" MAY BE ALLOWED BY THE PUBLIC WORKS DEPARTMENT ON A CASE-BYCASE BASIS. THESE ALTERNATE EDGE DRAIN SYSTEMS MUST BE PLACED AT THE SAME DEPTHS AS SHOWN ON THIS PLAN WITH ACCESS POINTS FORFLUSHING LOCATED OUTSIDE ROAD PAVEMENT NO LESS THAN EVERY 250.

SCALE: NTS

CITY OF ALBANY, CALIFORNIA		**STANDARD DETAIL**
APPROVED BY: Ray Chan DATE: DECEMBER 2015	**EDGE DRAIN**	STD DETAIL No. **SD 10**

K:\Standard Specifications and details\Details\CAD Drawings\SD 10 Edge Drain.dwg

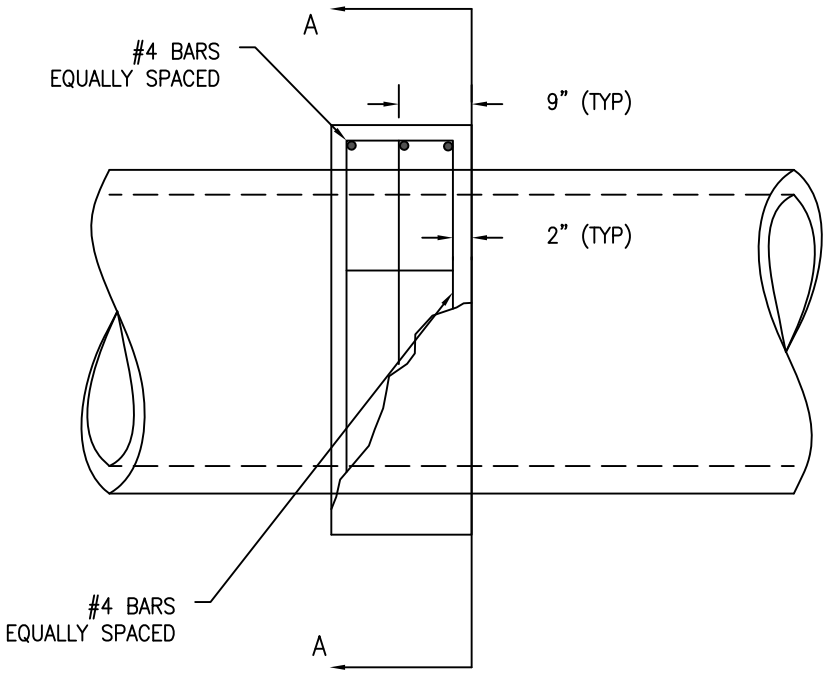

PLAN

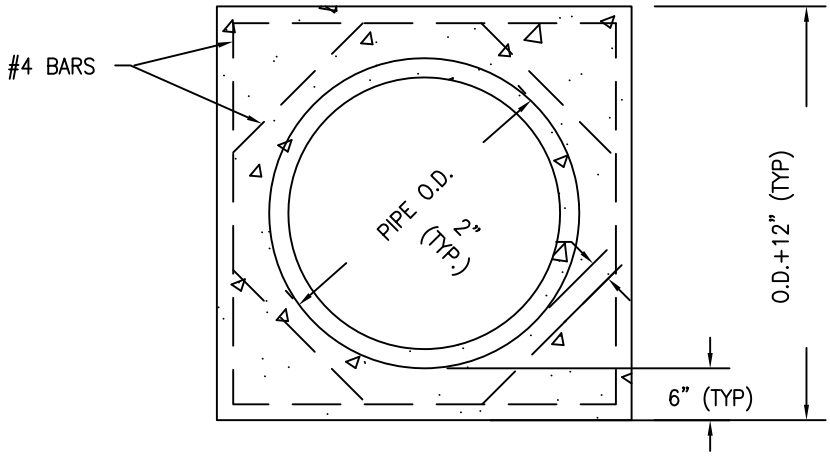

SECTION A–A

SCALE: NTS

CITY OF ALBANY, CALIFORNIA	STANDARD DETAIL	
APPROVED BY: Ray Chan DATE: DECEMBER 2015	REINFORCED CONCRETE PIPE COLLAR	STD DETAIL No. SD 11

K:\Standard Specifications and details\Details\CAD Drawings\SD 11 Reinforced Concrete Pipe Collar.dwg

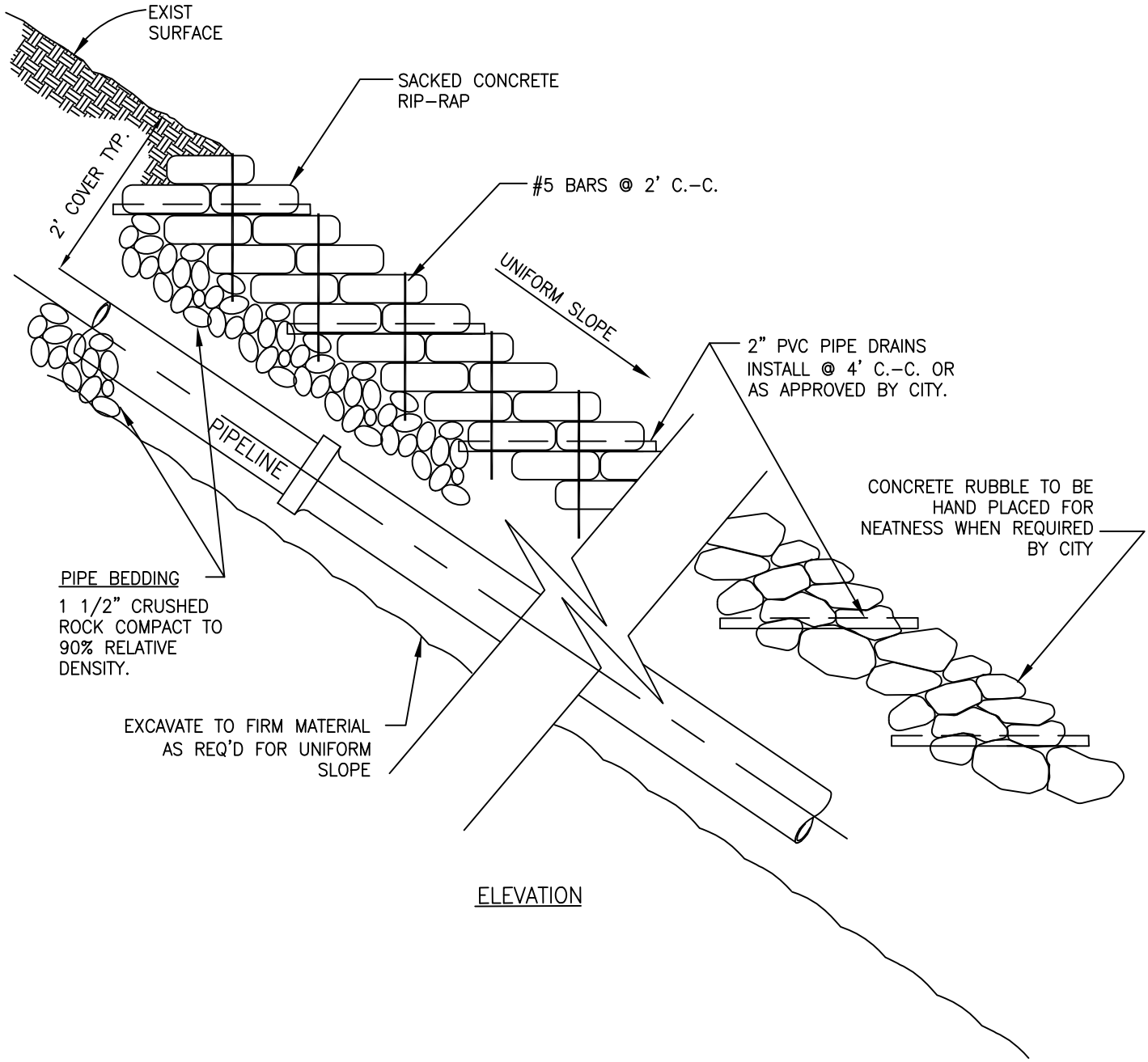

ELEVATION

NOTES:

1. CHECK BOARDS TO BE PLACED ON ALL SLOPES GREATER THAN 50% OR WHERE REQUIRED BY THE CITY. SEE SS 13.
2. ALL SLOPES 50% OR GREATER SHALL HAVE CLASS 150 C.I. BELL & SPIGOT PIPE.
3. CRUSHED ROCK SHALL COMPLY WITH ALBANY SPECIFICATIONS FOR PUBLIC WORKS CONSTRUCTION, PART 2 SEC 200 – 1.2

SCALE: NTS

CITY OF ALBANY, CALIFORNIA	STANDARD DETAIL	
APPROVED BY: Ray Chan DATE: DECEMBER 2015	STANDARD RIP-RAP INSTALLATION	STD DETAIL No. SD 12

K:\Standard Specifications and details\Details\CAD Drawings\SD 12 Standard Rip Rap Installation.dwg