1552 MARIN AVENUE 2ND UNIT ADDITION

ABBREVIATION

A / C	AIR CONDITIONING
ADJ.	ADJACENT
A.F.F.	ABOVE FINISH FLOOR
ALUM.	ALUMINUM
ALT.	ALTERNATE
APPROX.	APPROXIMATELY
ARCH.	ARCHITECTURAL
A.	AREA
BM.	BEAM
BLK.	BLOCK
BLKG.	BLOCKING
BOTT.	BOTTOM
BLDG.	BUILDING
BI - FLD. DR.	BIFOLDING DOORS
BP. SLDG. DR.	BYPASSING SLIDING DOOR
CAB.	CABINET
C.L.	CENTER LINE
CEIL.	CEILING
CLO.	CLOSET
CLR.	CLEAR
COL.	COLUMN
CONC.	CONCRETE
CONN.	CONNECTION
CONST.	CONSTRUCTION
CSMT.	SWINGING CASEMENT WINDOW
C.T.	CERAMIC TILE
CTR.	CENTER
CONT.	CONTINUOUS
DET.	DETAIL
D.F.	DRINKING FOUTAIN
DIA.	DIAMETER
DIM.	DIMENSION
DN.	DOWN
DBL.	DOUBLE
DBL. FR. DR.	DOUBLE FRENCH DOORS
DR.	DOOR.
DRWG.	DRAWING
D.W.	DRIVE WAY
(E)	EXISTING
EA.	EACH
ELEV.	ELEVATION
ELEC.	ELECTRICAL
EQ.	EQUAL
EQUIP.	EQUIPMENT
EXP.	EXPANSION
EXPO.	EXPOSED
EXT.	EXTERIOR
F.D.	FLOOR DRAIN
FIN.	FINISH
FLR.	FLOOR
FLOUR.	FLOURESCENT
F.O.F	FACE OF FINISH
F.O.S	FACE OF STUD
FTG.	FOOTING
FDN.	FOUNDATION
FRMG.	FRAMING
FURN.	FURNACE
F.A.U	HIGH-EFFICENCY FURNACE
FIXED	FIXED WINDOW
GA.	GAUGE
G.C.	GENERAL CONTRACTOR E
GR.	GRACE
GYP. BD.	GYPSUM BOARD
H.B.	HOSE BIB
HNGR.	HANGER
H.C.	HANDICAP
HDWR.	HARDWARE
HT.	HEIGHT
HK.	HOOK
H.C.	HOLLOW CORE DOOR
HORIZ.	HORIZONTAL
H.P.	HIGH POINT
H.W.	HOT WATER
INSUL	INSULATION
INT.	INTERIOR
IN.	INCH
JNT.	JOINT
JST.	JOIST
L.P.	LOW POINT
MECH.	MECHANICAL
MET.	METAL
MANUF.	MANUFACTURER
MAX.	MAXIMUM
MIN.	MINIMUM
(N)	NEW
N.I.C.	NOT IN CONRACT
NO.	NUMBER
O.C.	ON CENTER
OPNG.	OPENING
OPP.	OPPOSITE
P-LAM	PLASTIC LAMINATE
PLYWD.	PLYWOOD
℄	PROPERTY LINE
RF.	ROOF
RM.	ROOM
R.D.	ROOF DRAIN
R.O.	ROUGH OPENING
RECOMM.	RECOMMENDED
S.C.	SOLID CORE
SEC. RL. UP	SECTIONAL ROLL - UP
GAR. DR.	GARAGE DOOR
SHT.	SHEET
S.H.	SINGLE HUNG WINDOW
SL.	HORIZONTAL SLIDING WINDOW
SLDG. PK. DR.	SLIDING POCKET DOORS
STOR.	STORAGE
S.A.D.	SEE ARCHITECTURAL DRAWING
T. & G.	TONGUE & GROOVE
TEMP. GL.	TEMPERED TREATED GLASS
TYP.	TYPICAL
U.O.N.	UNLESS OTHERWISE NOTED
V.I.F.	VERIFY IN FIELD
WD.	WOOD
W.P.	WATERPROOF
W /	WITH
W. H.	WATER HEATER
@	AT

APPLICABLE CODE

- 2013 SAN FRANCISCO BUILDING CODE AMENDMENTS
- 2013 CALIFORNIA BUILDING CODE (CBC)
- 2013 CALIFORNIA MECHANICAL CODE (CMC)
- 2013 CALIFORNIA ELECTRICAL CODE (CEC)
- 2013 CALIFORNIA PLUMBING CODE (CPC)
- CALIFORNIA ENERGY CODE AKA ENERGY EFFICIENCY STANDARDS (EES)

DRAWING INDEX

A0.0	TITLE SHEET , EXISTING SITE PLAN
A1.0	EXISTING AND PROPOSED 2ND FLOOR PLANS AND DETAILS
A2.0	EXISTING AND PROPOSED GROUND FLOOR PLANS AND DETAILS

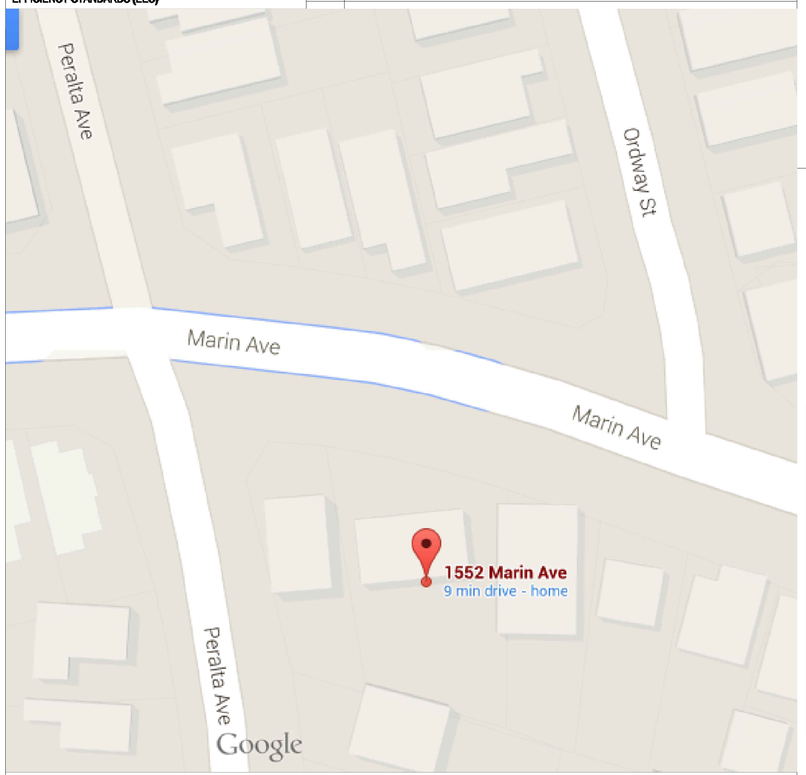

VICINITY MAP NTS
FROM GOOGLE MAP

N

BUILDING INFORMATION:

		(E) HOUSE	(N) 2ND UNIT
CONSTRUCTION TYPE		5-B	5-B
OCCUPANCY GROUP		R-3	R-3
BUILDING HEIGHT		-	-
BUILDING AREA PER FLOOR (SQ. FT.) LOT SIZE: 12,642 SQ.FT.	GROUND FLOOR (LIVING SPACE)	1,699	650
	SECOND FLOOR (LIVING SPACE)	NA	NA
	TOTAL	1,699	650
NUMBER OF THE STORIES		1	1
NUMBER OF THE BASEMENT		NA	NA
NUMBER OF BEDROOMS		3	2
NUMBER OF BATHROOMS		1.5	1.5

GENERAL INFORMATION

	EXISTING	PROPOSED
LOT COVERAGE	13.4%	18.6%
LOT IMPERVIOUS SURFACE	3421	3421(House)/786(2nd Unit)
NUMBER OF DWELLING UNITS	1	2
OFF-STREET PARKING SPACES	2	2(House)/2(2nd Unit)
DIMENSIONS OF PARKING SPACES	18 ft x 23 ft	18 ft x 23 ft
NARROWEST WIDTH OF DRIVEWAY	17'-2"	17'-2"

SITE REGULATIONS BY DISTRICT

	EXISTING	PROPOSED	REQUIREMENT
SETBACKS			
FRONT (N)	26'-7"	26'-7"	15'-0"
SIDE (W)	12'-9"	12'-9"(House)/5'-0"(2nd Unit)	5'-0"
SIDE (E)	22'-6"	22'-6"(House)/5'-3"(2nd Unit)	5'-0"
REAR (S)	59'-7"	59'-7"(House)/5'-0"(2nd Unit)	20'-0"(House)/5'-0"(2nd Unit)
AREA			
LOT SIZE	12642	12642	—
LOT COVERAGE	13.4%	18.6%	50%
MAXIMUM HEIGHT	16'-0"	16'-0"(House)/16'-0"(2nd Unit)	28'-0" MAX/16'-0"(2nd Unit)
2ND UNIT ADD. REQUIEMENTS			
ACCESSORY BUILDING COVERAGE OF THE REAR YARD	—	9.9%	30% MAX
DISTANCE OF ACCESSORY BUILDING TO MAIN BUILDING	—	34'-6"	6'-0" MIN

FLOOR AREA RATIO

	EXISTING	PROPOSED	REQUIREMENT
LOT SIZE	12642	12642	—
FLOOR AREA	1669	1669(House)/650(2nd Unit)	5671(House)/650(2nd Unit)
GARAGE/STORAGE	414/0	414/650(ABOVE CEILING)	—
MAIN LEVEL	1669	1669(House)/650(2nd Unit)	—
SECOND FLOOR	NA	NA	—
TOTAL	1669	1669(House)/650(2nd Unit)	5671(House)/650(2nd Unit)
TOTAL COUNTED	1669	2319	—
FLOOR AREA RATIO	13.4%	18.6%	55%

SCOPE OF WORK:

1. CONSTRUCT (N) 2ND UNIT IN THE BACK YARD OF (E) HOUSE.

ZONING DATA:

ZONING:
OCCUPANCY: R-3
CONSTRUCTION TYPE: 5-B

SIZE OF LOT: 12,642 SQ.FT.

ARCHITECTURAL NOTE:

A. GENERAL

Code sections as shown:

"sec. 301" is referring to 2013 California Building Code
"CMC sec. 1005.2" is referring to 2013 California Mechanical Code "CEC sec. 511.3" is referring to 2013 California Electrical Code "CPC sec. 610.2" is referring to 2013 California Plumbing Code.

B. Means of Egress

Ch. 10 – Means of Egress

1. Egress doors shall be side-hinged swinging and shall swing in the direction of egress travel where serving more than 50 occupant load per sec. 1008.1.2.
2. Escape openings shall be have a minimum net clear opening of 5.7 sq. ft., min. net clear openable height of 24" and min. net clear width of 20" and min. 44" to the bottom of clear opening above the floor.
3. Provide level landing on each side of the door with not more than 0.75" threshold at sliding doors or 0.5" for other doors per sec. 1008.1.6. Raised thresholds and floor level changes greater than 0.25" at doorways shall be beveled with a slope not greater than one unit vertical in two units horizontal (50% slope) per sec. 1008.1.4.
4. Door hardware in buildings not required to be accessible shall be centered between 34" and 48" above the floor as per sec. 1008.1.8.2.
5. Stairways shall have a min. 80" headroom clearance per sec. 1009.2.
6. Vertical distance between stairway landings is limited to 12 ft per sec. 1009.6.
7. The bottom of the clear opening of the emergency escape and rescue openings shall be no less than 44" from the floor per sec. 1026.3.

C. Interior Environment

Ch. 8 – Interior Finishes

8. Foam plastics shall not be used as interior finish except as provided in sec. 2603.9, 2604 and 801.2.2.
9. When walls and ceilings are required to be fire-resistive or non-combustible, the finish material shall be applied directly against such fire-resistive or non-combustible construction or to furring strips not exceeding 1-3/4 inches per sec. 803.4.1. The furred space shall be filled with inorganic or Class A material or fire blocked not to exceed 8 feet in any direction.
10. An interior wall or ceiling finishes (except Class A) less than ¼" thick shall be applied directly against a non-combustible backing unless it is in accordance with an approved tested assembly per sec. 803.4.4.

Ch. 12 – Interior Environment

11. Provide cross ventilation calculations for attic and enclosed rafter spaces. Ventilating area shall not be less than 1/150 of the area of the ventilated space, with 50% located at least 3 ft. above eave or cornice vents with the Balance of the required area provided by eave or cornice vents. A min. of 1" airspace shall be provided between insulation and the roof sheathing per sec. 1203.2. Where vapor retarder is used to reduce the ventilating area to 1/300 of ventilated space, indicate on the building section the location of vapor retarder to be on the warm side of the attic insulation.
12. For all occupied spaces, provide exterior openings for natural light (8% of floor area) per sec. 1205.2 or artificial lighting per sec. 1205.3. Natural ventilation (4% of floor area) or a mechanical system for all occupied spaces is also required per sec. 1203.1 & 1203.4.
13. Provide a mechanical ventilation system in bathrooms containing a bathtub and/or shower per sec. 1203.4.2.1.
14. Exterior openings for natural light shall open directly into a public way, yard or court unless they open into a roofed porch which abuts a public way, yard or court and has a ceiling height of 7 ft min. and is 65% minimum open on the longer side per sec. 1205.2.2.
15. Provide emergency escape in basements and in every sleeping room below the fourth story, which opens directly into a public way or to a yard or court leading to a public way per sec. 1206. Escape openings shall be have a minimum net clear opening of 5.7 sq. ft., min. net clear openable height of 24" and min. net clear width of 20" and min. 44" to the bottom of clear opening above the floor.
16. Provide a minimum of 7 ft dimension (in any direction) in all habitable rooms other than kitchen per sec. 1208.1 and at least one room of min. 120 sq. ft. net floor area and all other habitable rooms of min. 70 sq. ft. per sec. 1208.3.
17. Required ceiling height is 7'-6" min. and 7'-0" min. in kitchens, bathrooms, storage rooms and laundry rooms per sec. 1208.2.
18. Indicate the location of crawl space access with a min. of 18"x24" opening per sec. 1209.1.
19. Indicate the location of attic accesses with a min. of 20"x30" opening and min. 30" clear headroom per sec. 1209.2.
20. Showers and walls above bathtubs with showerheads shall be finished with a smooth, non-absorbent surface to a height not less than 70" above drain inlet per sec. 1210.3.
21. Toilet rooms shall not open directly into a room used for the preparation of food for service to the public. per sec. 1210.5.
22. Provide a clear space of 24" in front of the water closet and a min. 15" from its center to side wall and a min. of 30" center to center to any fixture per CPC sec. 407.6.
23. Shower stalls shall have a clear interior finish area of 7.1 sq. ft. and be able to accommodate a min. 30" circle at the threshold level. These clearances shall be maintained up to a height of 70" above shower drain per CPC sec. 411.7.
24. Private stairways shall be a min. of 36" wide. Trim and handrail may not encroach into this min. width by more then 3 ½". Every stairway must have a headroom clearance of not less than 6'-8" measured vertically from the plane of the tread nosing to the soffit above at all point. Enclosed useable space under stairs must be protected on the enclosed side by ⅝" type X gypsum board. BCB.1003.3.3
25. Stairways which serve an individual dwelling unit must have a handrail on one side if they have four risers or more. Handrail projecting from wall shall have not less than 1 ½" between the wall and handrail. handrail must be placed 34"-38" above the nosing of the stair treads. Ends must returned or have rounded terminations or bends. The handgrip portion of handrails shall not less than 1¼" nor more than 2" in cross-sectional dimension or the shape shall provide an equivalent gripping surface. the handrail portion of handrails shall have a smooth surface with no sharp corners. CBC 1003.3.3.6
26. Guardrails: Open side of floor openings, stairways, landings, ramps, balconies, or porches, which are more than 30" above grade or the floor below shall be protected by a guardrail. The top of residential guardrails must be at least 42" above the upper standing surface. Guardrails must have intermediate rails or an ornamental patten placed in such a manner that a sphere 4" sphere can't pass through. The triangular openings formed by riser, tread and bottom element of a guardrail at the open side of a stairway may be of such size that a 6" sphere can't pass through.

D. BUILDING ELEMENTS

Ch. 14 – Exterior Walls

27. Exterior walls, including basement walls, shall provide the building with a weather-resistant exterior wall envelope per sec. 1403.2. The exterior wall enveloped shall include flashing as described in sec.1405.3.
28. Balconies and similar projections of combustible construction other than fire-retardant-treated wood shall be fire-resistance rated floor construction in accordance with Table 601 or of heavy timber per sec. 602.4. The aggregate length shall not exceed 50% of the building's perimeter on each floor per sec. 1406.3. See exceptions in sec.1406.3.

Ch. 15 – Roof Assemblies and Rooftop Structures

29. Provide details of roof assemblies and specify roof covering materials per Table 1505.1.
30. Fasteners for roof covering shall be corrosion resistant such as copper, brass, stainless steel or galvanized per sec. 1507.
31. Provide overflow drains per CPC sec.1101.11.2. Over flow drain shall be installed with the inlet flow line 2" above the low point of the roof, and shall not be connected to the roof drain lines per CPC sec. 1101.11.2.2.
32. Extend chimneys above any part of the building within 10 ft, but shall not be less than 3 ft above the highest point where the chimney passes through the roof per sec. 2113.9.
33. Provide make, model and ICC report number for manufactured skylight(s) and fireplace(s).

Ch. 24 – Glass and Glazing

34. Screens shall be provided below sloped glazing of heat-strengthened glass or fully tempered glass shall be provided as per sec. 2405.3.
35. Skylights at angle less than 45 deg. from horizontal plane shall be mounted on a curb at least 4" above roof plane per sec. 2405.4.
36. Provide safety glazing in the locations as described in sec. 2406.3.

Ch. 25 – Gypsum Board and Plaster

37. Two layers of Grade D paper between plywood shear panel and exterior lath per sec. 2510.6.
38. Provide a corrosion-resistant weed screed on all exterior stud walls at or below the foundation plate line a minimum of 4" above grade, or 2" above paved areas per sec. 2512.1.2.

ZHIHUI HUANG
1205 CABRILLO ST
EL CERRITO
CA 94530
T. 510.333.1383

jeffuang@gmail.com

OWNER
STEVEN SU
1552 MARIN AVE
ALBANY
CA 94706
T. 510-520-5069

ssteven510@yahoo.com

1552 MARIN AVE 2ND UNIT
ALBANY, CA 94706

REGISTERED PROFESSIONAL ENGINEER
ZHIHUI HUANG
No. S5451
Exp. 06-30-16
STRUCTURAL
STATE OF CALIFORNIA

DATE:	ISSUE:
08.17.2015	PERMIT SET

PROJECT NUMBER: 1501

TITLE: TITLE SHEET

SCALE: AS NOTED

SHEET: A1.0

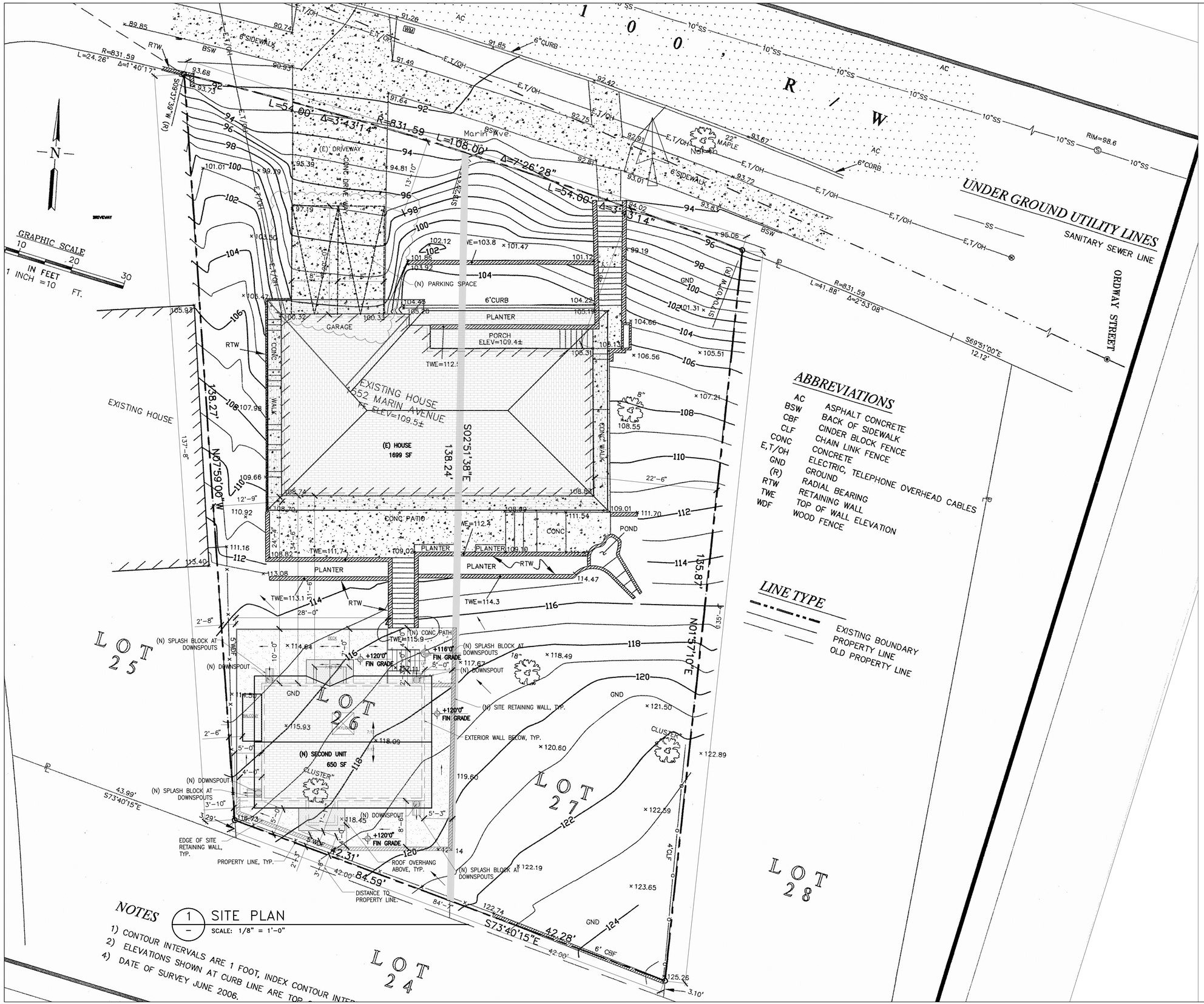

ZHIHUI HUANG

1205 CABRILLO ST
EL CERRITO
CA 94530
T. 510.333.1383

jeffuang@gmail.com

OWNER

STEVEN SU
1552 MARIN AVE
ALBANY
CA 94706
T. 510-520-5069

ssteven510@yahoo.com

1552 MARIN AVE 2ND UNIT

ALBANY, CA 94706

REGISTERED PROFESSIONAL ENGINEER
LITHUT HUANG
No. S5451
Exp. 06-30-16
STRUCTURAL
STATE OF CALIFORNIA

DATE:	ISSUE:
08.17.2015	PERMIT SET

PROJECT NUMBER: 1501

TITLE: SITE PLAN

SCALE: AS NOTED

SHEET: **A2.0**

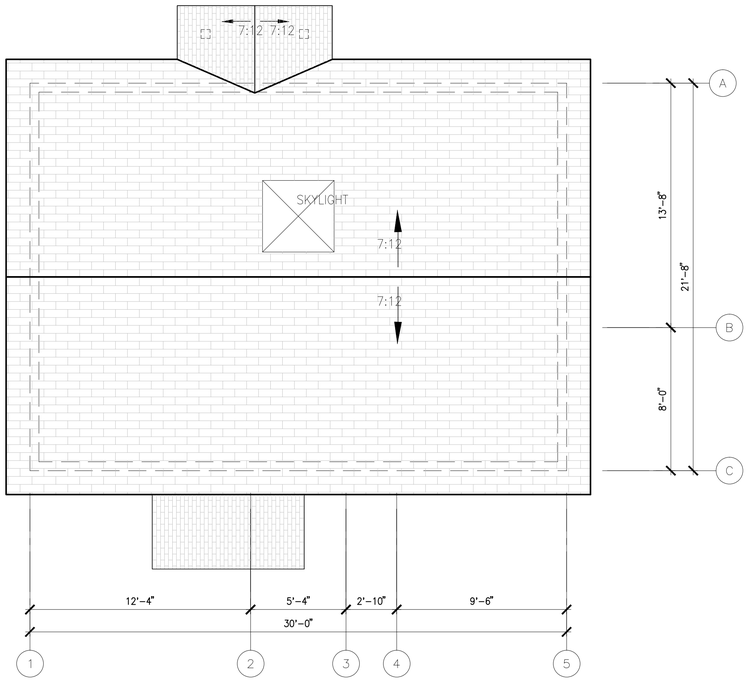

3 ROOF PLAN
SCALE: 1/4" = 1'-0"

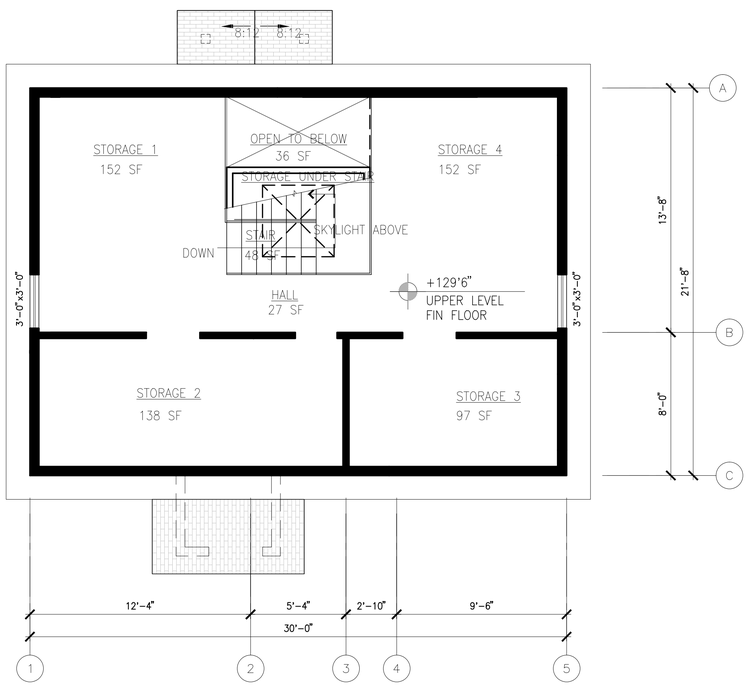

2 UPPER LEVEL PLAN
SCALE: 1/4" = 1'-0"

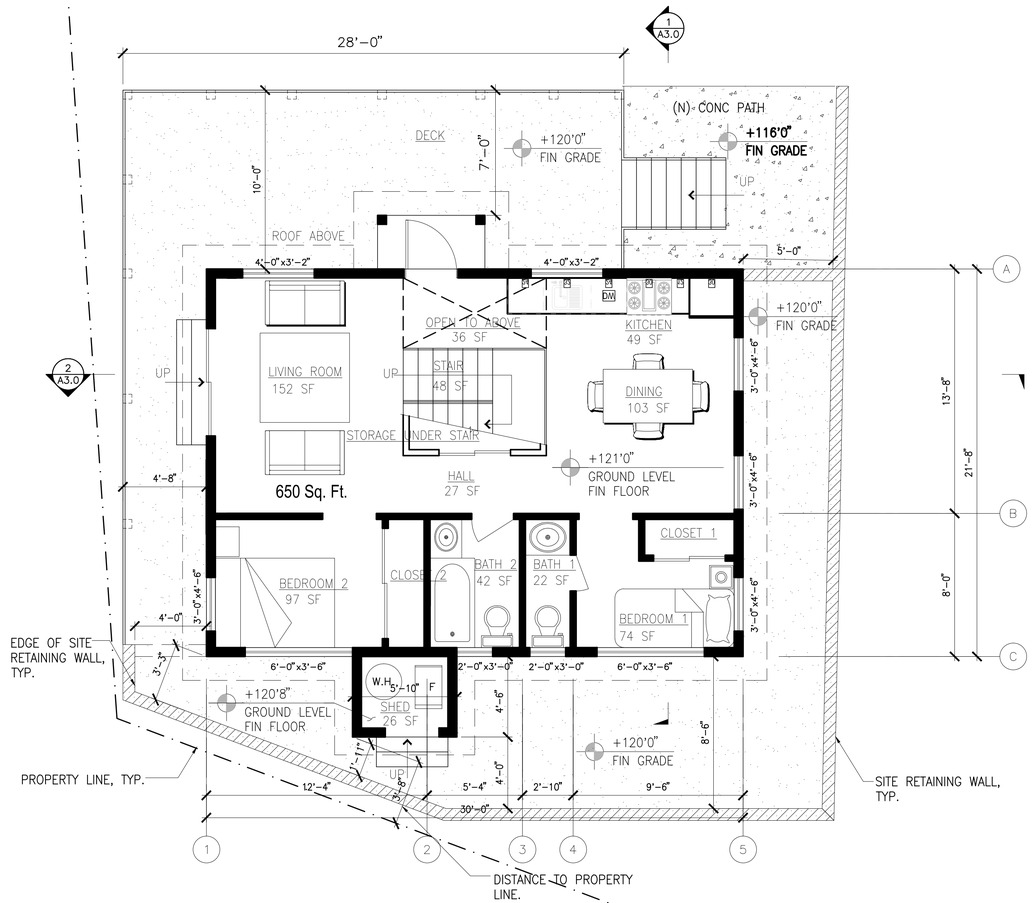

1 MAIN LEVEL PLAN
SCALE: 1/4" = 1'-0"

ZHIHUI HUANG

1205 CABRILLO ST
EL CERRITO
CA 94530
T. 510.333.1383

jeffuang@gmail.com

OWNER

STEVEN SU
1552 MARIN AVE
ALBANY
CA 94706
T. 510-520-5069

ssteven510@yahoo.com

1552 MARIN AVE 2ND UNIT
ALBANY, CA 94706

REGISTERED PROFESSIONAL ENGINEER
ZHIHUI HUANG
No. S5451
Exp. 06-30-16
STRUCTURAL
STATE OF CALIFORNIA

DATE:	ISSUE:
08.17.2015	PERMIT SET

PROJECT NUMBER: 1501

TITLE: FLOOR PLANS & ROOF PLAN

SCALE: AS NOTED

SHEET: **A2.1**

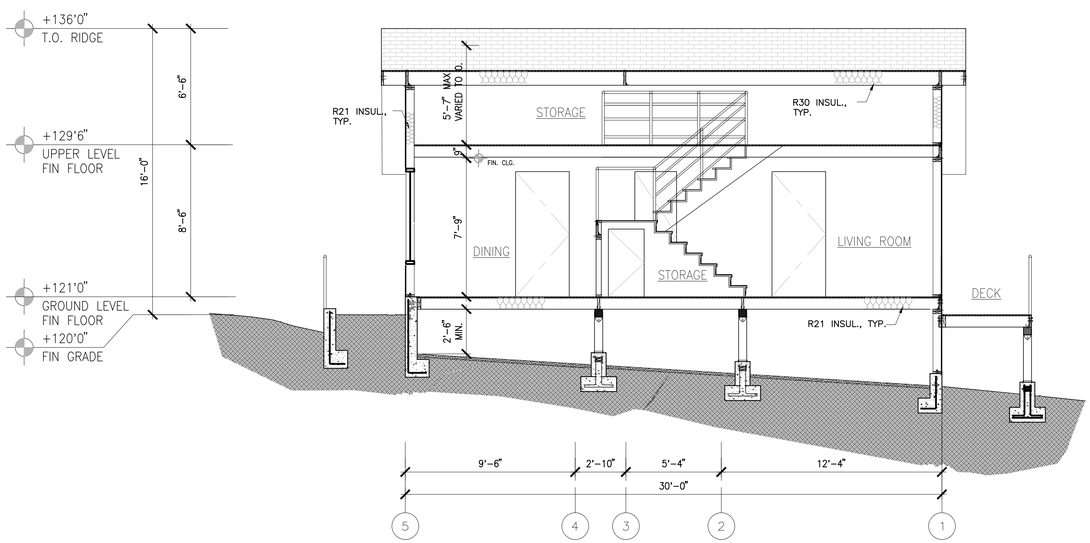

2 – SECTION 2–2

SCALE: 1/4" = 1'-0"

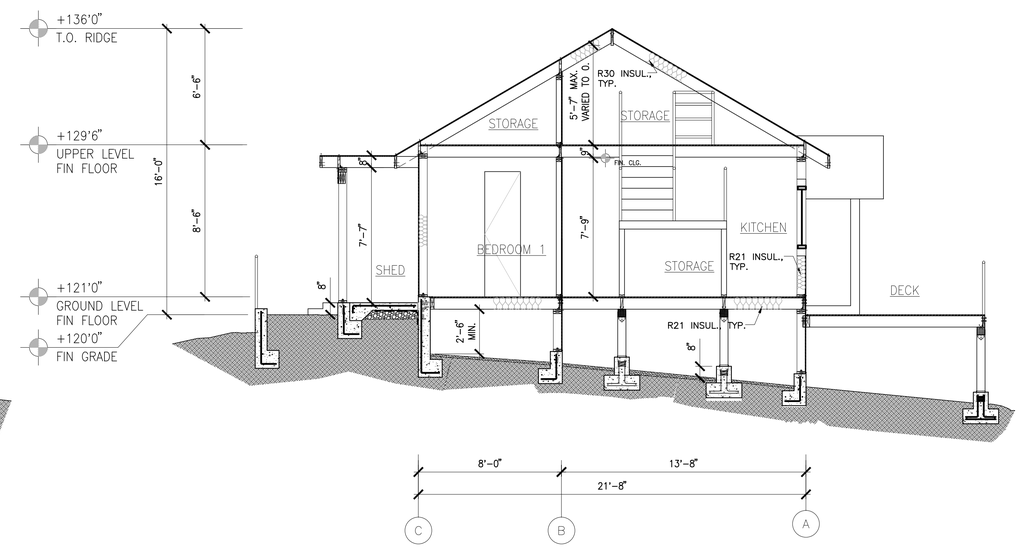

1 – SECTION 1–1

SCALE: 1/4" = 1'-0"

ZHIHUI HUANG

1205 CABRILLO ST
EL CERRITO
CA 94530
T. 510.333.1383

jeffuang@gmail.com

OWNER

STEVEN SU
1552 MARIN AVE
ALBANY
CA 94706
T. 510-520-5069

ssteven510@yahoo.com

1552 MARIN AVE 2ND UNIT

ALBANY, CA 94706

REGISTERED PROFESSIONAL ENGINEER
ZHIHUI HUANG
No. S5451
Exp. 06-30-16
STRUCTURAL
STATE OF CALIFORNIA

DATE:	ISSUE:
08.17.2015	PERMIT SET

PROJECT NUMBER: 1501

TITLE: SECTIONS

SCALE: AS NOTED

SHEET: **A3.0**

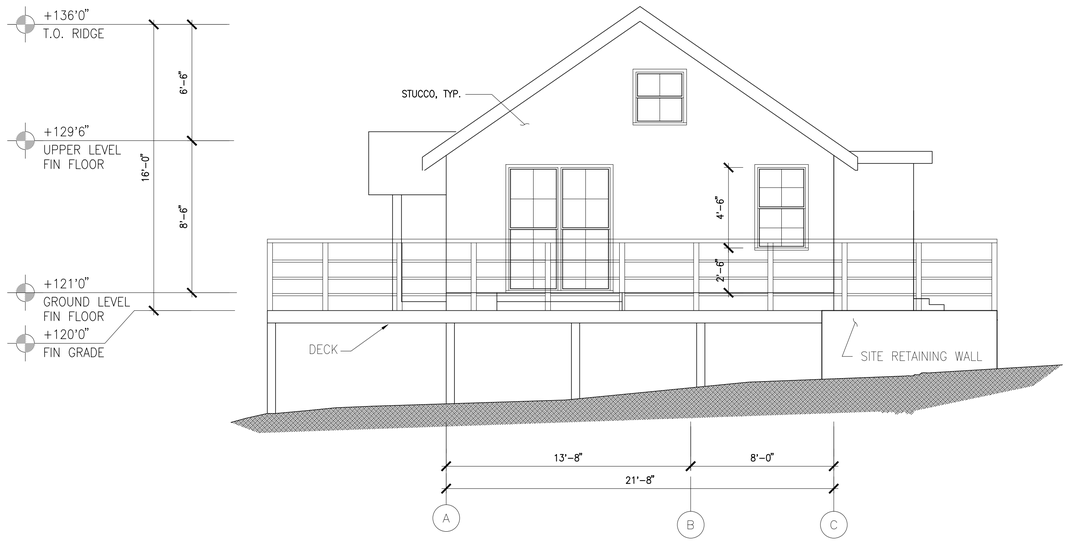

4 WEST ELEVATION
SCALE: 1/4" = 1'-0"

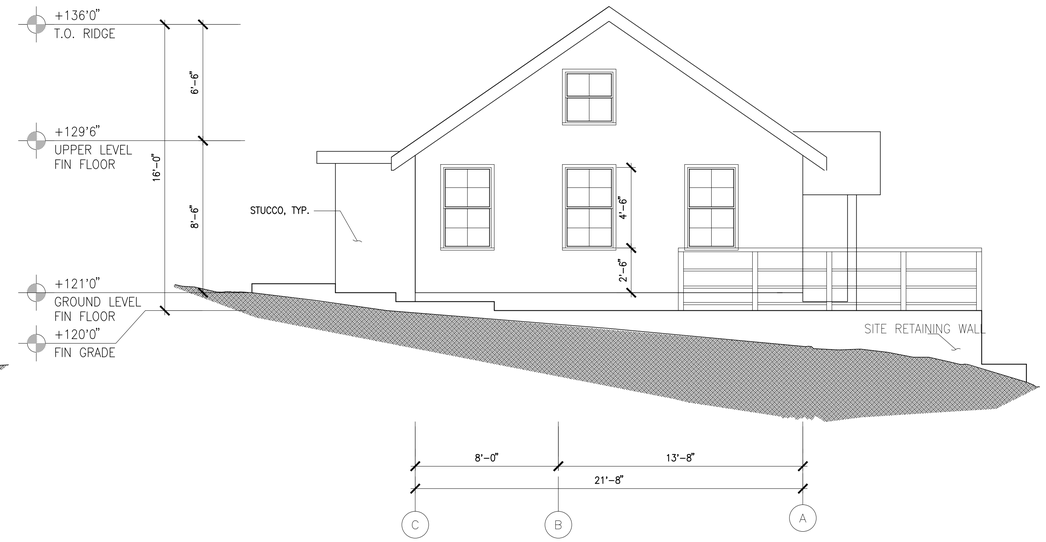

3 EAST ELEVATION
SCALE: 1/4" = 1'-0"

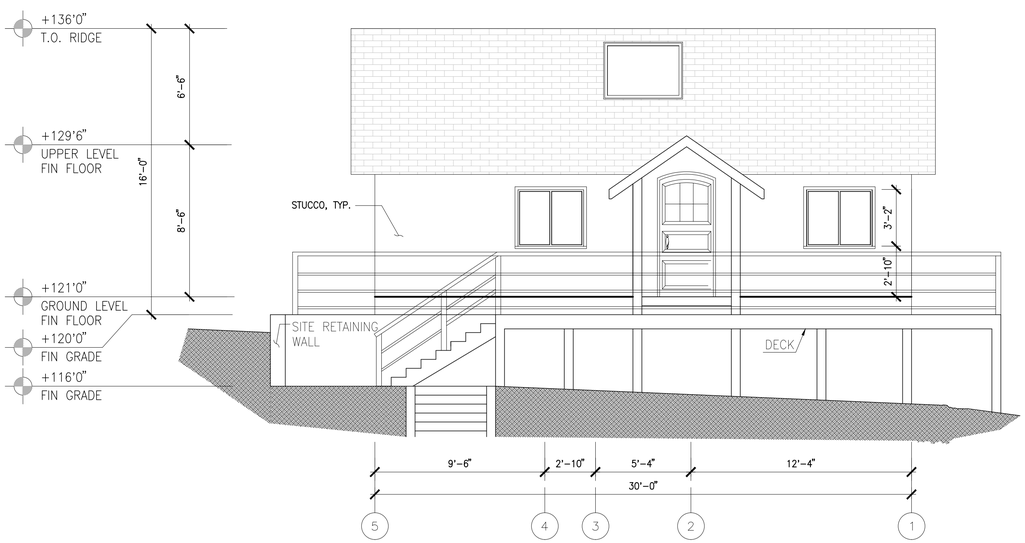

2 NORTH ELEVATION
SCALE: 1/4" = 1'-0"

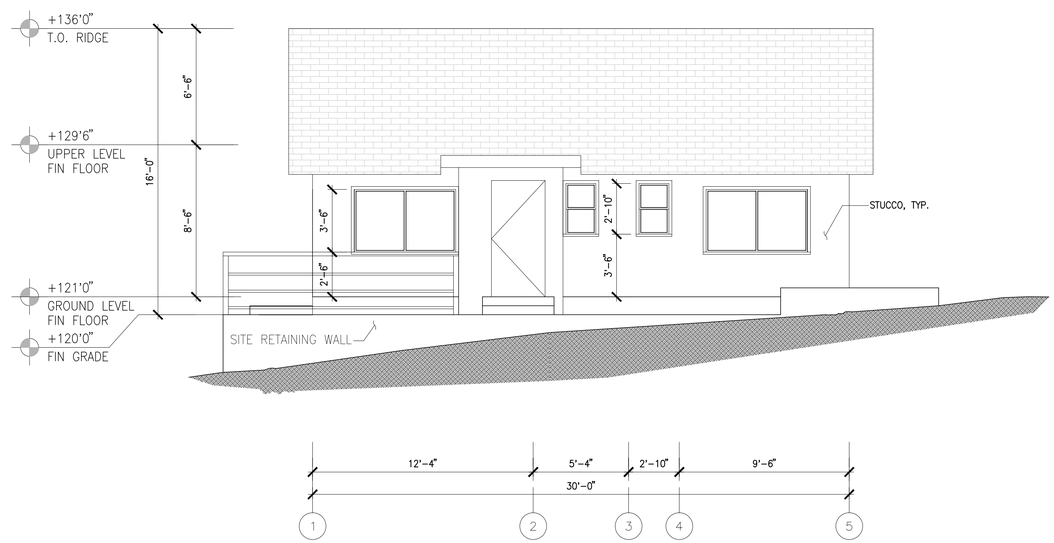

1 SOUTH ELEVATION
SCALE: 1/4" = 1'-0"

ZHIHUI HUANG

1205 CABRILLO ST
EL CERRITO
CA 94530
T. 510.333.1383

jeffuang@gmail.com

OWNER

STEVEN SU
1552 MARIN AVE
ALBANY
CA 94706
T. 510-520-5069

ssteven510@yahoo.com

1552 MARIN AVE 2ND UNIT
ALBANY, CA 94706

REGISTERED PROFESSIONAL ENGINEER
ZHIHUI HUANG
No. S5451
Exp. 06-30-16
STRUCTURAL
STATE OF CALIFORNIA

DATE:	ISSUE:
08.17.2015	PERMIT SET

PROJECT NUMBER: 1501

TITLE: ELEVATIONS

SCALE: AS NOTED

SHEET: A3.1

GENERAL NOTES

GENERAL

THESE NOTES APPLY TO THE "S" SERIES OF STRUCTURAL DRAWINGS LISTED ON THIS SHEET.

ALL WORK SHALL COMPLY WITH THE DRAWINGS AND AS WELL AS, THE MINIMUM REQUIREMENTS OF THE 2013 CALIFORNIA BUILDING CODE (CBC).

NOTES, TYPICAL DETAILS AND SCHEDULES APPLY TO ALL DRAWINGS UNLESS OTHERWISE SHOWN, NOTED OR SPECIFIED.

WHERE DIMENSIONS ARE NOT INFERABLE FROM THE FRAMING PLAN AND FRAME ELEVATION DRAWINGS, CONTRACTOR MAY SCALE THE DRAWINGS ONLY TO ESTIMATE THE LENGTH OF MEMBERS.

DETAILS OF THE CONSTRUCTION NOT FULLY SHOWN OR NOTED ON THE DRAWINGS SHALL BE OF THE SAME SIZE AND CHARACTER AS FOR SIMILAR CONDITIONS WHICH ARE SHOWN AND NOTED, SUBJECT TO REVIEW AND APPROVAL BY THE OWNER'S REPRESENTATIVE.

THE CONTRACTOR SHALL VERIFY ALL EXISTING CONDITIONS AND DIMENSIONS AT JOB SITE. THE CONTRACTOR SHALL COMPARE STRUCTURAL DRAWINGS WITH EXISTING CONDITIONS AND WITH ARCHITECTURAL, CIVIL, LANDSCAPE, MECHANICAL, PLUMBING AND ELECTRICAL DRAWINGS BEFORE COMMENCING WITH THE WORK, AND SHALL NOTIFY THE OWNER'S REPRESENTATIVE OF ANY DISCREPANCIES REQUIRING CLARIFICATION OR REVISION. DO NOT SCALE STRUCTURAL DRAWINGS. CONTACT OWNER'S REPRESENTATIVE FOR CLARIFICATION.

WHERE A SPECIAL SEQUENCE OF CONSTRUCTION IS REQUIRED FOR STRUCTURAL STABILITY AND SAFETY, THE CONTRACTOR SHALL OBSERVE THE SEQUENCE CALLED FOR IN THE DRAWINGS AND/OR SPECIFICATIONS, AND THE INSTRUCTIONS OF THE OWNER'S REPRESENTATIVE.

NOTES, TYPICAL DETAILS AND SCHEDULES APPLY TO ALL DRAWINGS AND GOVERN UNLESS OTHERWISE SHOWN, NOTED OR SPECIFIED.

FOR PROPER FIELD OBSERVATION BY THE STRUCTURAL ENGINEER, THE STRUCTURAL ENGINEER SHALL BE NOTIFIED OF THE VARIOUS CONSTRUCTION PHASES.

OBSERVATION VISITS TO THE JOB SITE BY THE ENGINEER'S FIELD REPRESENTATIVE SHALL BE CONSTRUED AS NEITHER INSPECTION NOR APPROVAL OF CONSTRUCTION.

THE CONTRACTOR SHALL BE RESPONSIBLE FOR BRACING AND SHORING THE PARTIALLY COMPLETED PORTIONS OF WORK.

NO OPENINGS, CHASES, NOTCHES, ETC. SHALL BE PLACED IN COLUMNS, JOISTS, BEAMS, BEARING WALLS AND SHEARWALLS UNLESS SPECIFICALLY NOTED ON THESE DRAWINGS. THE CONTRACTOR SHALL NOTIFY THE STRUCTURAL ENGINEER WHEN DRAWINGS BY OTHERS SHOW SUCH OPENINGS.

EXCAVATION NOTES

PROVIDE EXCAVATION AND TEMPORARY SHORING AS REQUIRED.

ALL EXCAVATIONS SHALL BE RETAINED BY A SOIL RETENTION SYSTEM AS REQ'D. THE DESIGN, INSTALLATION, MAINTENANCE, MONITORING AND REMOVAL SHALL BE THE COMPLETE AND SOLE RESPONSIBILITY OF THE CONTRACTOR.

THE CONTRACTOR SHALL COORDINATE ALL ELEMENTS OF THE SOIL RETENTION SYSTEM WITH ALL ELEMENTS OF THE PERMANENT BUILDING, EXISTING UTILITIES/CONDITIONS, ADJACENT STRUCTURES ETC.

THE CONTRACTOR SHALL PROVIDE POSITIVE PROTECTION (MAT/SHEET COVERINGS) FOR ALL EXCAVATION SLOPES TO PROTECT SLOPES FROM INSTABILITY AND DETERIORATION DUE TO RAIN, WIND, ETC.

THE CONTRACTOR SHALL PROVIDE DEWATERING SYSTEMS INCLUDING SURFACE DRAINAGE CHANNELS, SUMPS, SUMPS PUMPS, ETC., TO PROTECT ALL EXCAVATIONS FROM FLOODING.

CONSTRUCTION NOTES

PRIOR TO PROCEEDING WITH CONSTRUCTION, VERIFY EXISTING CONDITIONS OF AREAS TO RECEIVE THE WORK.

IN SLABS, SPLICES OF REINFORCING SHALL NOT BE MADE AT POINTS OF MAXIMUM STRESS WITHOUT THE APPROVAL OF THE STRUCTURAL ENGINEER. SPLICES SHALL PROVIDE SUFFICIENT LAP TO TRANSFER THE STRESSES BETWEEN BARS THROUGH BOND AND/OR SHEAR. SEE DETAIL AND SCHEDULE FOR SPLICE LENGTHS.

NO FOUNDATION OR SLABS ON GRADE SHALL BE PLACED INTO OR AGAINST SUBGRADE CONTAINING FREE WATER. SHOULD WATER HOWEVER SLIGHT, ENTER A FOUNDATION EXCAVATION AFTER SUBGRADE APPROVAL, THE SUBGRADE SHALL BE RE-INSPECTED AND APPROVED BY THE OWNER'S GEOTECHNICAL CONSULTANT AFTER A REMOVAL OF WATER.

PROVIDE TEMPORARY REMOVAL OF WATER FROM ANY SOURCE DURING CONSTRUCTION. DEWATERING SHALL BE CAREFULLY AND PROPERLY PERFORMED TO AVOID DISTURBING THE FOUNDATIONS.

PRIOR TO PLACING CONCRETE, CLEAN THE AREA ALL DEBRIS. ALL REINFORCING SHALL BE CLEANED THOROUGHLY IMMEDIATELY PRIOR TO PLACING CONCRETE. TEMPLATES SHALL BE USED TO SET ANCHOR BOLTS.

ALL FOUNDATIONS, BASEMENT WALLS AND MAT FOUNDATION CONCRETE SHALL USE ASTM C150, TYPE I CEMENT AND HAVE MINIMUM 28-DAY STRENGTH SHOWN.

FOOTINGS AND GRADE BEAMS SHALL BE CAST IN NEAT TRENCHED EXCAVATIONS (1" WIDER THAN DIMENSIONS SHOWN). IF FOOTINGS CANNOT BE CAST IN TRENCHES, FORM FOOTINGS TO DIMENSIONS SHOWN.

THE SPECIAL INSPECTION REQUIREMENTS OF SECTION 1701, 2013 CBC APPLY TO FILL AND BACKFILL OPERATIONS. FOOTING EXCAVATIONS SHALL BE INSPECTED AND APPROVED BY THE OWNER'S REPRESENTATIVE PRIOR TO PLACING REINFORCING STEEL.

SEE ARCHITECTURAL DRAWINGS FOR WATERPROOFING AND DAMPROOFING DETAILS.

PLYWOOD

WALL AND ROOF SHEATHING SHALL BE PS1, APA STRUCTURAL 1, EXTERIOR TYPE DOUGLAS FIR, GRADE C-D . ALL EXTERIOR WALLS SHALL BE PLYWOOD SHEATHED. FLOOR SHEATHING SHALL BE PS1, APA STURD-I-FLOOR, EXTERIOR TYPE, DOUGLAS FIR GRADE C-D PLUGGED.

PLYWOOD FACE GRAIN SHALL BE PERPENDICULAR TO JOISTS. BLOCK UNSUPPORTED PLYWOOD SHEET EDGES WITH 2x BLOCKING WHERE SPECIFIED, STAGGER FLOOR AND ROOF SHEET LAYOUT. MINIMUM SHEET WIDTH SHALL NOT BE LESS THAN 24 INCHES.

PLYWOOD SHEETS SHALL ABUT ALONG THE CENTERLINE OF FRAMING MEMBERS WITH NAILING NOT LESS THAN 3/8" FROM EDGE OF SHEETS AT THE FOLLOWING SPACINGS:

PLYWOOD NAILING SCHEDULE:

PLYWOOD LOCATION	PLYWOOD THICKNESS	NAIL SIZE	NAIL TYPE	NAIL SPACING EDGE/COLLECTOR	NAIL SPACING INTERMEDIATE
ROOF	3/8"	8d	COMM.	4"	12"
FLOOR	3/4"	10d	COMM.	6" (U.O.N.)	10"
NON-SHEAR WALL	1/2"	8d	COMM.	6"	12"

FIELD NAIL INTERIOR OF WOOD SHEATHED SHEARWALL WITH 8d (10d) AT 12" O.C.

ALL SHEATHING SHALL BE APPLIED DIRECTLY TO THE STUD WITH STUD SPACING NO GREATER THAN 16" O.C.

BLOCK ALL EDGES OF WOOD SHEATHED SHEARWALL.

SHEARWALLS SHALL RUN AND BE CONNECTED TO UNDERSIDE OF ROOF OR FLOOR SHEATHING WITH APPROVED BLOCKING AS REQUIRED AND SHALL CONNECT WITH FLOOR OR FOUNDATION BELOW.

PLATES AND STUDS IN SHEARWALLS SHALL NOT HAVE ANY HOLES LARGER THAN 1" IN DIAMETER OR ANY NOTCHES WITHOUT THE APPROVAL OF THE STRUCTURAL ENGINEER.

CONCRETE

ALL CONCRETE CONSTRUCTION SHALL BE PER CBC CHAPTER 19 AND IN ACCORDANCE WITH ACI 301-11 STANDARD SPECIFICATIONS FOR STRUCTURAL CONCRETE.

CONCRETE MIX SHALL MEET REQUIREMENTS OF CBC SECTION 1905, BUT SHALL MEET THESE MINIMUM CONCRETE MIX REQUIREMENTS: MAXIMUM OF 4" SLUMP. MAXIMUM WATER-CEMENT RATIO OF 0.45 FOR SLABS. CEMENT SHALL CONFORM TO ASTMC150, TYPE II (OR ENGINEERED MAXIMUM DESIGN TO STRENGTH). TYPE V CEMENT WHERE SOIL CONTAINS MORE THAN 0.2 % SULFATE CONCENTRATIONS. ALL ALTERNATE CONCRETE MIX DESIGN AND TEST STRENGTHS SHALL BE SUBMITTED TO THE STRUCTURAL ENGINEER FOR APPROVAL PRIOR TO CONSTRUCTION.

HARD ROCK AGGREGATES SHALL CONFORM TO ASTM C33. MAXIMUM NORMAL SIZE OF AGGREGATE SHALL NOT EXCEED 1½ INCHES FOR FOUNDATION CONCRETE AND 1 INCH FOR STRUCTURAL CONCRETE ABOVE THE FOUNDATION. SEE ALSO THE REQUIREMENTS IN ACI STANDARD SPECIFICATIONS. MAXIMUM NORMAL SIZE SHALL ALSO BE SELECTED SUCH THAT WORKABILITY AND PLACEABILITY OF CONCRETE ARE FACILITATED.

UNLESS NOTED OTHERWISE, MINIMUM CONCRETE CLEAR COVER TO BARS SHALL COMPLY WITH THE FOLLOWING, BUT SHALL IN NO CASE BE LESS THAN ONE BAR DIAMETER:

FOUNDATION AND TIE BEAMS (FORMED):
- 3" – BOTTOM
- 2" – TOP BARS & SIDE STIRRUPS

CONCRETE CAST AGAINST SOIL:
- 3" – NOT FORMED
- 2" – FORMED.

SLAB-ON-GRADE:
- 3" – BOTTOM BARS
- 1" – TOP BARS.

WALLS (WITH WATERPROOFING):
- 2" – FROM EXTERIOR FORMED SURFACE
- 1 1/2" – FROM INTERIOR FORMED SURFACE

CENTERED – BARS IN SINGLE CURTAIN:

COVERS SHOWN ARE CLEAR TO FACE OF REBAR CLOSEST TO SURFACE OF CONCRETE U.N.O.

ALL CONCRETE REINFORCEMENT SHALL BE DETAILED, FABRICATED, LABELED, SUPPORTED AND SPACED IN FORMS AND SECURED IN PLACE IN ACCORDANCE WITH THE PROCEDURES AND REQUIREMENTS OUTLINED IN THE LATEST EDITION OF THE "BUILDING CODE REQUIREMENTS FOR REINFORCED CONCRETE", ACI 318 AND THE "MANUAL OF STANDARD PRACTICE FOR DETAILING REINFORCED CONCRETE STRUCTURES", ACI 315 AND 2010 CBC AND THE LOCAL BUILDING CODES.

ALL REINFORCING SPLICES SHALL CONFORM TO THE MINIMUM REQUIREMENTS OF THE 2010 CBC, UNLESS NOTED OTHERWISE.

NO CALCIUM CHLORIDE SHALL BE USED IN ANY CONCRETE. CONSTITUENT OR ADMIXTURE.

ALL CONSTRUCTION JOINTS SHALL BE WIRE BRUSHED AND CLEANED, PRIOR TO POURING ADJACENT SECTIONS OF CONCRETE. CONSTRUCTION JOINTS SHALL BE LOCATED WHERE SHOWN, AND IF NOT SHOWN, WHERE DIRECTED BY THE OWNER REPRESENTATION. THEY SHALL BE LOCATED SO AS TO LEAST IMPAIR THE STRENGTH OF THE STRUCTURE AND TO MINIMIZE THE SHRINKAGE. PROVED DOWELS AND KEYS AS DETAILED AND DIRECTED.

ANCHOR BOLTS, STRAP ANCHORS, DOWELS, REINFORCING BARS, AND OTHER INSERTS SHALL BE SET AND SECURELY FASTENED PRIOR TO POURING CONCRETE.

USE THE FOLLOWING MATERIAL PROPERTIES U.N.O.

NORMAL WEIGHT CONCRETE: CONCRETE SLABS; 2,500 PSI PIERS & GRADE BEAMS; 2,500 PSI

ALL REINFORCEMENT BAR LAPS, ANCHORAGES, SPLICES, BENDS, AND OTHER DETAILS SHALL BE IN CONFORMANCE WITH ACI-318, BUT IN NO CASE SHALL LAPS AND SPLICES BE LESS THAN 36 BAR DIAMETERS. UNLESS OTHERWISE NOTED, LOCATIONS OF LAPS AND SPLICES SHALL BE IN ACCORDANCE WITH CONSTRUCTION JOINT LOCATIONS, DETAILS AND SHALL BE SHOWN ON THE REINFORCING SHOP DRAWINGS.

ALL HORIZONTAL WALL AND WALL FOOTING REINFORCEMENTS SHALL BEND AROUND ALL CORNERS AND EXTEND 63 BAR DIAMETERS UNLESS NOTED OTHERWISE.

THE CONCRETE CONTRACTOR SHALL BE RESPONSIBLE FOR ALL POUR SEQUENCES AND CONSTRUCTION PROCEDURES FOR ALL CONCRETE WORK TO ACCOUNT FOR TEMPERATURE DIFFERENTIALS AND SHRINKAGE OCCURING DURING THE CONSTRUCTION PHASE UNTIL THE BUILDING IS PERMANENTLY IN A MECHANICALLY CONTROLLED ENVIRONMENT.

THE CONCRETE SHALL CONTAIN AN ACCEPTABLE WATER REDUCING, PLASTICIZING ADMIXTURE. NO CALCIUM CHLORIDE SHALL BE USED IN ANY CONCRETE WITHOUT PRIOR APPROVAL.

ALL REINFORCING STEEL SHALL BE NEW BILLET, HOT ROLLED, DEFORMED BARS CONFORMING TO ASTM A615, GRADE 60 (MINIMUM YIELD STRENGTH OF 60 KSI). REINFORCING BARS TO BE WELDED SHALL BE A706 GRADE 60.

REINFORCING BARS SHALL BE IN AS LONG LENGTHS AS PRACTICABLE AND AS DETAILED, AND SHALL BE LAPPED AT SPLICES AND CORNERS NOT LESS THAN THE LAP SPLICE LENGTH SHOWN IN THE "MINIMUM REINFORCING LAP SCHEDULE" ON THE DRAWING, UNLESS OTHERWISE SHOWN. STAGGER HORIZONTAL WALL BAR SPLICES. VERTICAL REINFORCING AT COLUMNS, PILASTERS AND WALLS SHALL BE DOWELED TO SUPPORTING FOOTINGS WITH BARS OF SAME SIZE AND SPACING AS VERTICAL REINFORCING UNLESS OTHERWISE SHOWN ON DRAWINGS. IN GENERAL, BAR SPLICES SHALL BE MADE AT POINTS OF MINIMUM STRESS. STAGGER SPLICES IN ADJACENT BARS. SPLICE NO MORE THAN 50% OF BARS AT ANY SECTION. SPLICES SHALL BE MADE AT POINTS OF MINIMUM STRESS. STAGGER SPLICES IN ADJACENT BARS.

DOWELS SHALL MATCH SIZE AND NUMBER OF MAIN REINFORCING.

SEE ARCHITECTURAL DRAWINGS FOR TYPE AND LOCATION OF ALL FLOOR AND WALL FINISHES, AND FLOOR DEPRESSIONS.

SEE MECHANICAL, PLUMBING, ELECTRICAL DRAWINGS FOR ALL CONDUIT SLABS. CONDUITS SHALL BE RUN GENERALLY AT MIDBAY AND PARALLEL CONDUITS SHALL BE SPACED AT THREE DIAMETERS ON CENTER MINIMUM. CONDUIT SIZES SHALL NOT EXCEED ¼TH OF THE SLAB THICKNESS AND SHALL BE LOCATED AT MID-THICKNESS OF THE SLAB. PREPARE AND SUBMIT TO THE ARCHITECT FOR REVIEW, LOCATION OF CONDUITS, PULL BOXES AND OTHER ITEMS EMBEDDED IN STRUCTURAL CONCRETE.

SHEARWALL SCHEDULE

TYPE	PLYWOOD	EDGE NAILING	SILL FASTENING: TO CONCRETE /STEEL BEAM	SILL FASTENING: TO WOOD FLOOR/ROOF	TOP PLATE FASTENING: TO JOIST OR BLKG	TOP PLATE FASTENING: TO WOOD BEAM	TOP PLATE FASTENING: TO STEEL BEAM
6	1/2" PLYWOOD ONE SIDE	10d @6" o.c.	5/8"ø A.B. @32" o.c.	16d @4" o.c. STAGGER	LTP4 OR A35 @16" o.c.	¼" SIMPSON SDS SCREW @9" o.c. STAGGERED	⅝"ø M.B. @32" o.c.
4	1/2" PLYWOOD ONE SIDE	10d @4" o.c.	5/8"ø A.B. @24" o.c.	16d @3" o.c. STAGGER	LTP4 OR A35 @10" o.c.	¼" SIMPSON SDS SCREW @9" o.c. STAGGERED	⅝"ø M.B. @24" o.c.
3	1/2" PLYWOOD ONE SIDE	10d @3" o.c.	5/8"ø A.B. @16" o.c.	½" SIMPSON SDS SCREW @6" o.c.	LTP4 OR A35 @8" o.c.	¼" SIMPSON SDS SCREW @9" o.c. STAGGERED	⅝"ø M.B. @16" o.c.
2	1/2" PLYWOOD ONE SIDE	10d @2" o.c.	3/4"ø A.B. @16" o.c.	½" SIMPSON SDS SCREW @4" o.c.	LTP4 OR A35 @6" o.c.	¼" SIMPSON SDS SCREW @9" o.c. STAGGERED	¾"ø M.B. @16" o.c.
2 / 2	DENOTES DOUBLE SIDED SHEAR WALL. APPLY THE ABOVE SCHEDULED REQUIREMENTS TO EACH SIDE AND DOUBLE SILL FASTENING AND JOISTS/BLOCKING TO TOP PLATES CONNECTORS.						
SIMPSON STRONG-WALL	PER MANUFACTURE'S SPECIFICATION						

NOTES:

1. THIS SCHEDULE IS BASED ON CBC TABLE 2306.4.1
2. USE COMMON NAILS FOR ALL NAILING.
3. THIS SCHEDULE SHALL APPLY TO NAILING AT ALL STUDS, AT PLYWOOD JOINTS, TOP AND BOTTOM PLATES AND BLOCKING.
4. NAILING AT INTERMEDIATE MEMBERS SHALL BE SPACED AT 12" O.C.
5. PLYWOOD SHALL BE APPLIED OVER STUDS SPACED AT 16" O.C.
6. ALL EXTERIOR FOOTING SHALL HAVE AS A MINIMUM 5/8"x12" ANCHOR BOLTS AT 48" O.C. U.N.O. IN THE TABLE ABOVE.
7. ANCHOR BOLTS SHALL BE EMBEDED 8" MIN. IN CONCRETE
8. SHEAR WALLS MORE THAN ONE VERTICAL PANEL IN HEIGHT SHALL HAVE VERTICALLY OR HORIZONTALLY STAGGERED SPLICED JOINTS AT CONTINUOUS HORIZONTAL JOINTS. THE BLOCKING SHALL BE 3x MEMBER OR THICKER.
9. FOUNDATION SILL PLATES SHALL NOT BE LESS THAN 3x MEMBER.
10. USE DOUBLE 2x RIM BOARD OR BLOCKING AT SHEAR WALLS WITH EDGE NAIL OF 4" OR LESS.
11. PROVIDE 3x MEMBERS AT ALL PLYWOOD EDGES FOR SHEAR WALL WHERE NAILING IS EQUAL OR LESS THAN 4" O.C.
12. NAILING SPACED 3" OR LESS SHALL BE STAGGERED.
13. SIMPSON SCREWS SHALL BE AS LONG TO ACHIEVE FULL PENETRATION INTO THE MAIN MEMBER PER MANUFACTURE'S SPECIFICATIONS.

CARPENTRY

ALL WOOD CONSTRUCTION SHALL BE PER CBC, CHAPTER 23.

ALL FRAMING SHALL BE DOUGLAS FIR. No. 2 GRADE OR BETTER, EXCEPT BEAMS, POSTS AND TRUSS SHALL BE No. 1 OR BETTER GRADE.

ALL STRUCTURAL LUMBER SHALL BE HAVE THE FOLLOWING MAXIMUM MOISTURE CONTENT: MC < 19%.

ALL LUMBER IN CONTACT WITH CONCRETE TO BE PRESERVATIVE TREATED.

ALL FASTENERS IN CONTACT WITH PRESSURE TREATED WOOD SHALL BE HOT-DIP ZINC-COATED GALVANIZED.

BOLTS SHALL BE A307 UNFINISHED MACHINE BOLTS OF SIZES SHOWN ON THE DRAWINGS. NUTS SHALL BE TIGHTENED WHEN PLACED AND RETIGHTENED BEFORE CLOSING JOB WITH FINAL CONSTRUCTION. WHERE BOLTS BEAR AGAINST WOOD, PROVIDE SQUARE PLATE WASHERS. ALL HEADS AND NUTS IN THE FOLLOWING SIZES:

BOLT SIZE	STEEL PLATE WASHERS AGAINST WOOD (EXCEPT AT SILL PLATE)
1/2" DIAM. AND 5/8" DIAM.	2" X 2" X 1/4"
3/4" DIAM. AND 7/8" DIAM.	3" X 3" X 1/4"
1" DIAM. AND 1 1/4" DIAM.	3" X 3" X 1/4"

MANUFACTURED TIMBER FASTENERS ARE INDICATED ON THE DRAWINGS USING THE SIMPSON COMPANY CATALOG DESIGNATIONS. THESE SYMBOLS ARE USED ONLY FOR IDENTIFICATION. NAILING SHALL BE N ACCORDANCE WITH MANUFACTURER'S SPECIFICATIONS, WITH A NAIL PROVIDED FOR EACH PUNCHED HOLE.

NAILS SHALL BE COMMON WIRE NAILS. MINIMUM NAILING SHALL BE IN ACCORDANCE WITH THE 2010 CBC, TABLE 2304.9.1.

ALL MEMBERS NOTED D.S., DRAG STRUT, SHALL RECEIVE EDGE NAILING.

PROVIDE THE FOLLOWING BLOCKING AND BRIDGING AS A MINIMUM, UNLESS OTHERWISE SHOWN:
- 2x FULL DEPTH SOLID BLOCKING BETWEEN JOISTS OVER BEARING SUPPORTS.
- FLAT 2x BLOCKING BETWEEN JOISTS OVER AND BELOW NON-BEARING PARTITION WALLS.
- FULL DEPTH 2x BLOCKING AT MID-SPAN OF ALL JOISTS WHERE SPAN EXCEEDS 14'-0".

LAG SCREWS PER ANSI/ASME STANDARD B18.2.1 PROVIDE LEAD HOLE SAME DIAMETER AND DEPTH AS SHANK AND THEN DRILL HOLE 60% – 70% OF SHANK DIAMETER FOR THREADED PORTIONS.

ALL SHEATHING TO BE STAMPED BY THE AMERICAN PLYWOOD ASSOCIATION (APA) AND SHALL CONFORM TO THE U.S. PRODUCT STANDARD (PS 1) WITH EXTERIOR GLUE. COMPOSITE OR NON-VENEERED PANELS SHALL COMPLY WITH NATIONAL RESEARCH BOARD REPORT NER-108, SUBFLOOR ADHEDIVE: APA SPECIFICATION AFG-01. INSTALL PLYWOOD AND NON-VENEERED PANELS PER APA CONSTRUCTION GUIDE, LATEST EDITION. SEE ARCHITECTURAL FRAMING PLANS FOR THICKNESS AND TYPE OF FLOOR AND ROOF SHEATHING. (MINIMUM SHEET SIZE 24"). ALL FLOOR AND SHEARWALL PLYWOOD SHALL BE STRUCTURAL I.

UNLESS NOTED OTHERWISE, ALL SILL PLATES IN CONTACT WITH CONCRETE OR MASONRY SHALL BE BOLTED TO THE CONCRETE WITH 5/8" DIAMETER ANCHOR BOLTS AT 4'-0" O.C WITH 0.229"x3"x3" SQUARE PLATE WASHER.

ALL BOLT HEADS AND NUTS WHICH BEAR AGAINST THE FACE OF WOOD MEMBERS SHALL BE PROVIDED WITH WASHERS. NO UPSET THREADS ARE ALLOWED.

PROVIDE MULTIPLE STUDS FOR SOLID BEARING AT THE ENDS OF MISCELLANEOUS BEAMS OR GIRDER WHERE POSTS ARE NOT SHOWN.

PROVIDE DOUBLE FLOOR JOISTS UNDER PARALLEL PARTITIONS PER TYPICAL DETAILS.

PROVIDE SOLID BLOCK AT BEARING WALLS, UNDER PERPENDICULAR PARTITIONS AND ELSEWHERE AS REQUIRED PER CBC 2304.11. PROVIDE FULL DEPTH BLOCKING AT ENDS AND AT 10' O.C. MAXIMUM SPACING.

MINIMUM SPLICE NAILING OF DOUBLE PLATES TOBE AS FOLLOWS UNLESS NOTED OTHERWISE: TWELVE (12) 16d EACH SIDE OF SPLICE WITH NO ADJACENT SPLICE WITHIN 4'-0". SEE TYPICAL DETAIL ON GENERAL DETAIL SHEET.

PROVIDE 2x3 CROSS BRIDGING OR 2x SOLID BLOCKING AT A MINIMUM OF 8'-0" O.C. FOR JOISTS (CONTACT METAL BRIDGING OR EQUAL MAY BE USED) WHERE SHEATHING OR GYPSUM BOARD IS NOT APPLIED TO TOP AND BOTTOM OF JOISTS FOR ENTIRE LENGTH OF JOIST.

RETIGHTEN ALL BOLTS BEFORE CLOSING IN.

ALL BOLTS, SCREWS, NAILS AND HARDWARE EXPOSED TO THE WEATHER SHALL BE GALVANIZED WITH G185 GALVANIZATION.

ENGINEERED TIMBER

MICROLAM LVL BEAMS:
FLEXURAL STRESS F_b =2600 psi MODULUS OF ELASTICITY E=1.9x10^6 psi SHEAR STRESS F_v =285 psi

TIMBERSTRAND LSL RIM BEAMS:
FLEXURAL STRESS $_b$F =1700 psi MODULUS OF ELASTICITY E=1.3x10^6 psi SHEAR STRESS $_v$F =400psi

TJI JOISTS: USE TRUSS JOIST MACMILLAN "TJI" SERIES OR EQUAL PRODUCT.

FABRICATION SHALL BE BY A LICENSED FABRICATOR. SUBMIT INSPECTION CERTIFICATES TO THE ARCHITECT UPON REQUEST EXCEPT INSPECTION CERTIFICATES FOR GLULAM SHALL BE SUBMITTED TO THE ARCHITECT PRIOR TO FRAME INSPECTION.

STRUCTURAL OBSERVATIONS

THE FOLLOWING WORK REQUIRE STRUCTURAL OBSERVATION PER CBC SECTION 1702:

FOUNDATION REINFORCING
REINFORCED CONCRETE
SHEARWALL NAILING
ANCHOR BOLT AND HOLDOWN INSTALLATION

SPECIAL INSPECTION

THE FOLLOWING WORK REQUIRE SPECIAL INSPECTION PER CBC SECTION 1701:

SHEARWALL NAILING
DOWELS AND ACHNOR BOLTS INSTALLED INTO (E) CONC

DESIGN CRITERIA:

DEAD LOADS
- ROOF (TYPICAL) = 14psf
- ROOF (OVERHANG/BBQ) = 17psf
- FLOOR (TYPICAL) = 10psf
- WALL (EXTERIOR) = 20psf (VERTICAL SURFACE)
- WALL (INTERIOR) = 8psf (VERTICAL SURFACE)

LIVE LOADS
- FLOOR = 40psf (REDUCIBLE)
- ROOF = 20psf (REDUCIBLE)

FOUNDATION
PER MINIMUM 2010 CBC VALUES
ALLOWABLE SOIL BEARING PRESSURE 1500psf

SEISMIC DESIGN DATA
IMPORTANCE FACTOR I = 1.0, OCCUPANCY CATEGORY II
Ss = 1.612, S1 = 0.601
SITE CLASS = D, SEISMIC CATEGORY D
SDS = 1.075, SD1 = 0.601
DESIGN BASE SHEAR: BASE SHEAR, V = Cs*W, WHERE W = EFFECTIVE SEISMIC WEIGHT

WOOD SHEARWALLS
R = 6.5
Cs = 0.165

WIND DESIGN DATA
BASIC WIND SPEED: 85MPH
IMPORTANCE FACTOR I = 1.0, OCCUPANCY CATEGORY II
EXPOSURE CATEGORY C

SYMBOLS

- CONCRETE
- DETAIL REFERENCE SYMBOL
- DETAIL NUMBER / SHEET NUMBER
- CONTINUOUS WOOD MEMBER IN SECTION
- WOOD BLOCKING MEMBER IN SECTION
- FRAMING MEMBER / DIAGRAMMATIC EXTENT OF FRAMING
- HD** — SIMPSON HOLD DOWN, SEE PLAN AND DETAIL
- CHANGE IN ELEVATION SYMBOL
- LETTER OR NUMBER OF SECTION / SHEET ON WHICH ELEVATION OCCURS

ABBREVIATIONS

&	AND
@	AT
A.B.	ANCHOR BOLT
BM.	BEAM
BOT.	BOTTOM
B.O.	BOTTOM OF
℄	CENTER LINE
COL.	COLUMN
CONT.	CONTINUOUS
CLR	CLEAR
CONC	CONCRETE
CONN	CONNECTION
DET.	DETAIL
D.F.	DOUGLAS FIR
D.S.	DRAG STRUT
DWG.	DRAWING
DIAG	DIAGONAL
DIA	DIAMETER
DN	DOWN
EA.	EACH
EL.	ELEVATION
EXT.	EXTERIOR
E.N.	EDGE NAILING
E.F.	EACH FACE
EQ	EQUAL
(E)	EXISTING
EXT	EXTERIOR
FL.	FLOOR
FTG.	FOOTING
FT	FEET
FLR	FLOOR
GALV	GALVANIZE
GA	GAUGE
GR	GRADE
HORIZ.	HORIZONTAL
HT	HEIGHT
IN.	INCH
INFO	INFORMATION
K	KIPS
KIPS	1000 POUNDS
LAT	LATERAL
LL	LIVE LOAD
M.B.	MACHINE BOLTS
MAX.	MAXIMUM
MIN.	MINIMUM
MISC.	MISCELLANEOUS
MECH	MECHANICAL
MTL	METAL
MID	MIDDLE
MF	MOMENT FRAME
N.T.S.	NOT TO SCALE
NO.	NUMBER
O.C.	ON CENTER
OPP.	OPPOSITE
O.H.	OPPOSITE HAND
O.D.	OUTSIDE DIAMETER
PL	PLATE
PLY.	PLYWOOD
P.T.	PRESSURE OR PRESERVATIVE TREATED
REINF.	REINFORCEMENT
REQ'D	REQUIRED
REV	REVISED OR REVISION
S.A.D.	SEE ARCHITECTURAL DRAWINGS
S.C.D.	SEE CIVIL DRAWINGS
SCHED.	SCHEDULE
SIM.	SIMILAR
SQ.	SQUARE
SYM.	SYMMETRICAL
SECT	SECTION
S.O.G.	SLAB ON GRADE
SPEC	SPECIFICATION
SQ.	SQUARE
SF	SQUARE FEET
STAGG	STAGGERED
STD	STANDARD
STL	STEEL
STIFF	STIFFENER
STRUCT	STRUCTURAL
S.W.	SHEAR WALL
T&B	TOP AND BOTTOM
T&G	TONGUE AND GROOVE
T.O.C.	TOP OF CONCRETE
TYP.	TYPICAL
THK	THICK OR THICKNESS
T & B	TOP AND BOTTOM
T.O.	TOP OF
U.O.N.	UNLESS OTHERWISE NOTED
U.N.O.	UNLESS NOTED OTHERWISE
VERT	VERTICAL
W/	WITH
W/O	WITHOUT
WT	WEIGHT
W.W.F.	WELDED WIRE FABRIC
WF	WIDE FLANGE
W.P.	WORK POINT

ZHIHUI HUANG
1205 CABRILLO ST
EL CERRITO
CA 94530
T. 510.333.1383
jeffuang@gmail.com

OWNER
STEVEN SU
1552 MARIN AVE
ALBANY
CA 94706
T. 510-520-5069
ssteven510@yahoo.com

1552 MARIN AVE 2ND UNIT
ALBANY, CA 94706

REGISTERED PROFESSIONAL ENGINEER
ZHIHUI HUANG
No. S5451
Exp. 06-30-16
STRUCTURAL
STATE OF CALIFORNIA

DATE:	ISSUE:
03.10.2015	PERMIT SET

PROJECT NUMBER: 1501

TITLE: GENERAL NOTES, ABBREVIATIONS AND SYMBOLS

SCALE: AS NOTED

SHEET: S1.0

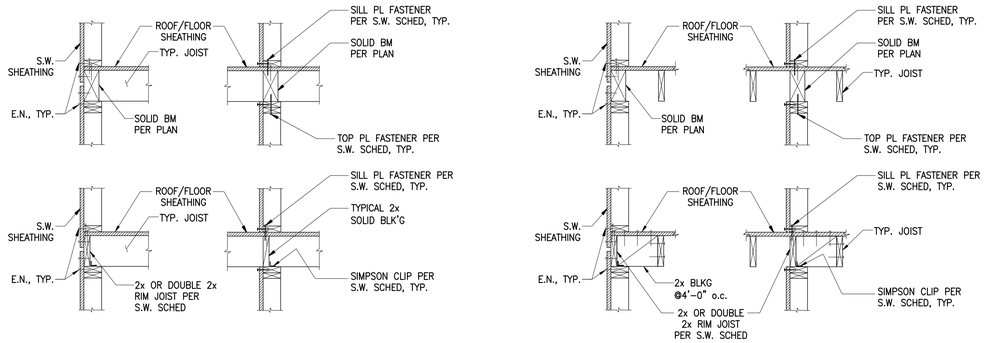

AT FLOOR/ROOF JOIST PERPENDICULAR TO WALL

AT FLOOR/ROOF JOIST PARALLEL TO WALL

7 TYPICAL SHEAR WALL DETAILS

SCALE: NONE

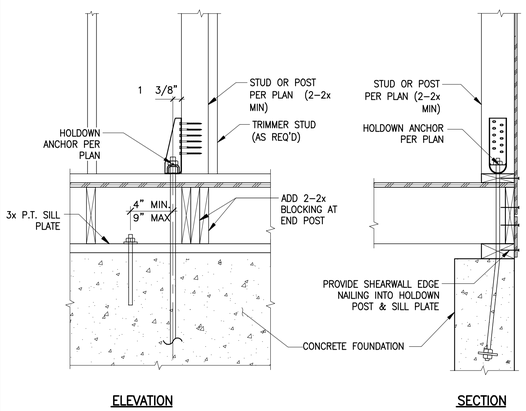

ELEVATION

SECTION

ABOVE RAISED FLOOR FRAMING

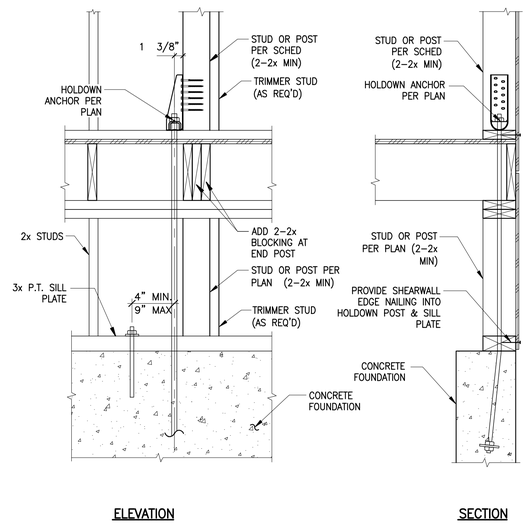

ELEVATION

SECTION

ABOVE CRIPPLE WALL

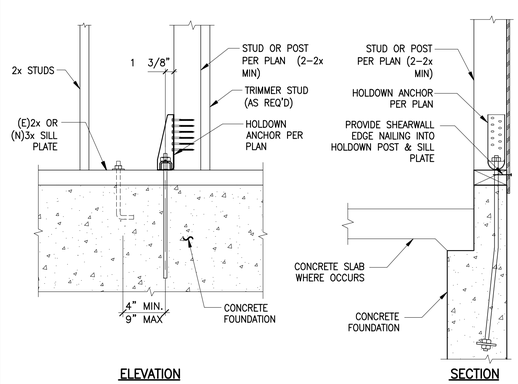

ELEVATION

SECTION

ABOVE CONCRETE

SHEAR WALL HOLD DOWN AND END POST SCHEDULE					
		FRAMED FLOOR		FOUNDATION	
HOLD DOWN TYPE (2)	MIN. END POST SIZE	SCREWS /BOLTS TO POST	BOLTS THRU FLOOR (3) (4)	BOLT TO FDN. (3) (4) THREADED ROD W/PL WASHER	THREADED ROD EPOXY ANCHOR (FOR RETROFIT)
HDU2	2-2x4	6-SDS¼x2½	5/8" ø	5/8"ø W/12" MIN. EMB. ¼"x3"x3" PLATE WASHER	5/8"ø W/12" MIN. EMB.
HDU4	2-2x4	10-SDS¼x2½	5/8" ø	5/8"ø W/12" MIN. EMB. ¼"x3"x3" PLATE WASHER	5/8"ø W/12" MIN. EMB.
HDU5	2-2x6	14-SDS¼x2½	5/8" ø	5/8"ø W/16" MIN. EMB. ¼"x3"x3" PLATE WASHER	5/8"ø W/16" MIN. EMB.
HDU8	3-2x6 OR 4x6	20-SDS¼x2½	7/8" ø	7/8"ø W/18" MIN. EMB. ¼"x3½"x3½" PLATE WASHER	7/8"ø W/18" MIN. EMB.
HDU11	6x6	30-SDS¼x2½	1" ø	1"ø W/18" MIN. EMB. ⅜"x4"x4" PLATE WASHER	1"ø W/20" MIN. EMB.
HHDQ11	6x6	24-SDS¼x2½	1" ø	1"ø W/18" MIN. EMB. ⅜"x4"x4" PLATE WASHER	1"ø W/20" MIN. EMB.
SIMPSON STRONG-WALL	PER MANUFACTURER'S SPECIFICATION				

1. REFER TO THE PLANS FOR HOLD DOWN ASSEMBLY MARKS AND HOLD DOWN POST SIZES.
2. FOR HOLD DOWN ASSEMBLIES, USE SIMPSON CATALOG "HDU" SERIES HOLD DOWNS, OR APPROVED EQUAL.
3. BOLTS THROUGH FLOOR AND EMBEDDED IN FOUNDATION SHALL BE A36 STEEL ALL THREADED RODS.
4. AT HOLDOWN OVER FRAMED BEAM, USE SQ. PLATE WASHERS REQ'D. FOR FDN. H.D.
5. EPOXY THREADED RODS SHALL BE INSTALLED PER EPOXY MANUFACTURER'S SPECIFICATIONS.

* WHERE RETROFITTED INTO EXISTING CONCRETE USE SIMPSON SET-XP (ICC REPORT No. ESR-2508), OR HILTI HIT-RE500-SD (ICC REPORT No. ESR-2322) EPOXY ADHESIVE FOR THREADED ROD INTO CONCRETE WITH EMBEDMENT SHOWN FOR THREADED ROD.

6 TYPICAL SHEAR WALL HOLDOWN DETAILS AND SCHEDULE

SCALE: NONE

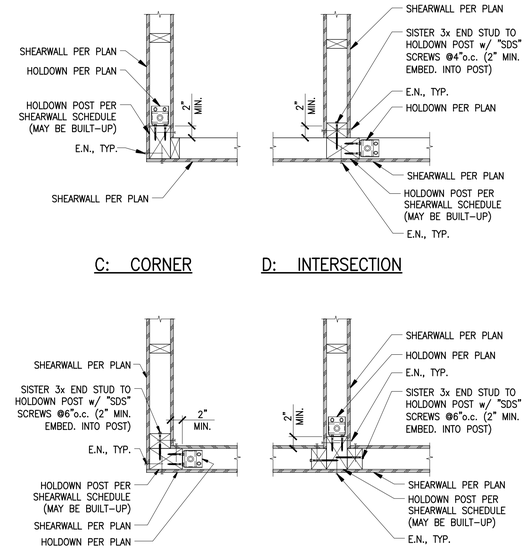

C: CORNER

D: INTERSECTION

A: CORNER

B: INTERSECTION

5 TYPICAL PLAN AT DOUBLE-SIDED OR INTERIOR SHEARWALL

SCALE: NONE

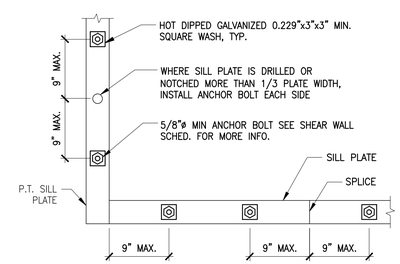

4 SILL PLATE BOLTING DETAIL

SCALE: NONE

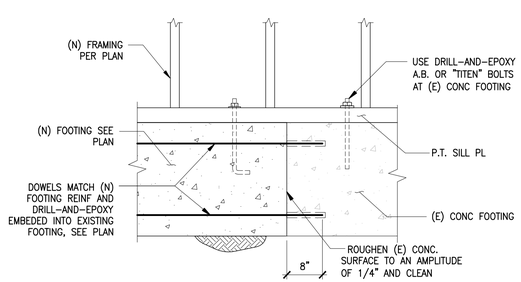

3 (N) TO (E) CONC FOUNDATION CONNECTION DETAIL

SCALE: 1"=1'-0"

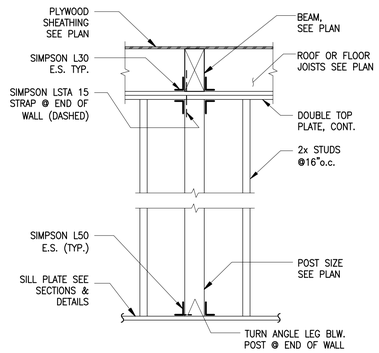

2 TYPICAL POST AND BEAM IN STUD WALL DETAIL

SCALE: NONE

DEVELOPMENT LENGTH OF STRAIGHT DEFORMED BARS

SIZE	DEVELOPMENT LENGTH				LAP SPLICE (ASSUME SPLICE CLASS B)			
	CASE 1		CASE 2		CASE 1		CASE 2	
	HORIZONTAL TOP BARS	OTHER BARS	HORIZONTAL TOP BARS	OTHER BARS	HORIZONTAL TOP BARS	OTHER BARS	HORIZONTAL TOP BARS	OTHER BARS
4	29"	22"	43	33"	37"	29"	56"	73"
5	36"	28"	54"	42"	47"	36"	70"	54"
6	43"	33"	65"	50"	56"	43"	84"	65"
7	63"	48"	94"	72"	81"	63"	122"	94"
8	72"	55"	107"	83"	93"	72"	139"	107"
9	81"	62"	121"	93"	105"	81"	153"	121"

f'_c = 3000 PSI f_y = 60 KSI

NOTE: CASE 1 – CLEAR DISTANCE FROM OTHER BARS GREATER THAN OR EQUAL TO BAR DIA.

CASE 2 – CLEAR DISTANCE FROM OTHER BARS LESS THAN BAR DIA.

	MAIN BAR SIZE		TIE BAR SIZE	
	#3 TO #7	#8 TO #11	#3 TO #5	OTHERS
MIN. BEND DIAMETER	6 BAR DIA	8 BAR DIA	4 BAR DIA	SAME AS MAIN REINF.

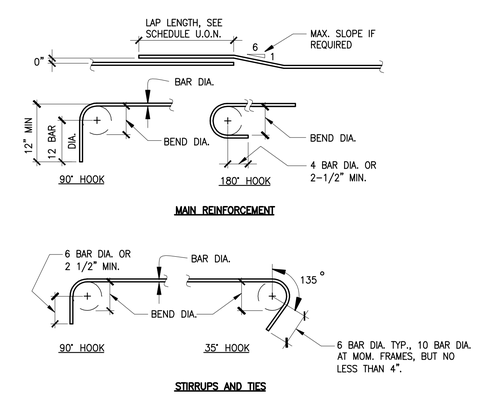

1 TYPICAL BAR HOOKS AND BENDS MINIMUM REINF LAP SCHED

SCALE: NONE

ZHIHUI HUANG
1205 CABRILLO ST
EL CERRITO
CA 94530
T. 510.333.1383
jeffuang@gmail.com

OWNER
STEVEN SU
1552 MARIN AVE
ALBANY
CA 94706
T. 510-520-5069
ssteven510@yahoo.com

1552 MARIN AVE 2ND UNIT
ALBANY, CA 94706

REGISTERED PROFESSIONAL ENGINEER ZHIHUI HUANG No. S5451 Exp. 06-30-16 STRUCTURAL STATE OF CALIFORNIA

DATE: ISSUE:

03.10.2015 PERMIT SET

PROJECT NUMBER: 1501

TITLE: TYPICAL DETAILS I

SCALE: AS NOTED

SHEET: S1.1

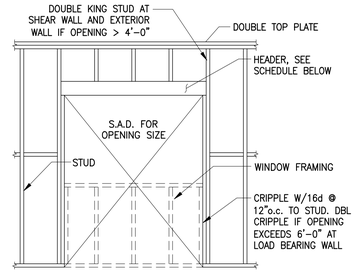

MAX. SPAN	MIN. HEADER SIZE	
	NON-BEARING	BEARING
3'-6"	4x4	WTx6
6'-0"	4x6	WTx8
8'-0"	4x8	WTx10
10'-0"	4x10	WTx12
OVER 10'	PER PLAN	PER PLAN

WT = WALL THICKNESS

NOTE:
CONNECTIONS AND HEADER SIZES ON THIS DETAIL APPLY TO ALL OPENINGS UNLESS NOTED OTHERWISE.

5 – OPENING IN STUD WALL TYP HEADER DETAIL

SCALE: NONE

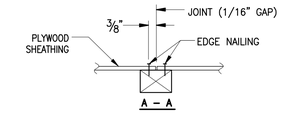

3x4 BLOCKING BETWEEN JOISTS OR STUDS, FIT TIGHTLY @ ENDS WITH 2-10d TOENAILS EACH END.

BLOCKING FOR PLYWOOD SHEATHING

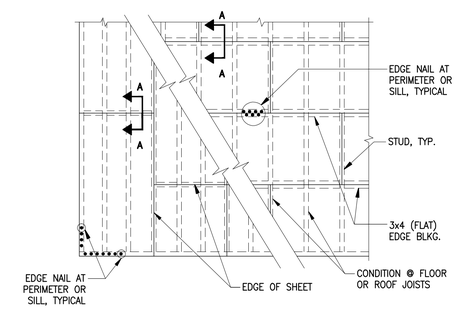

3 – TYPICAL PLYWOOD DIAPHRAGMS

SCALE: NONE

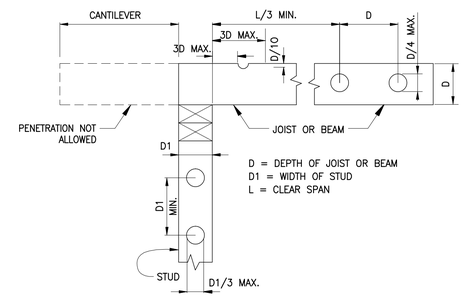

4 – HOLES & NOTCHES IN STUD OR JOIST & BEAM

SCALE: NONE

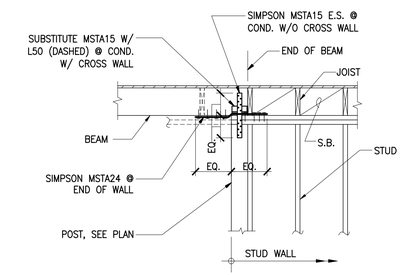

2 – BEAM & POST IN STUD WALL

SCALE: NONE

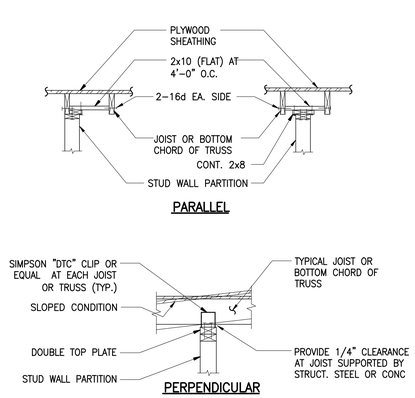

6 – TYPICAL NON-BEARING WALL DETAIL

SCALE: NONE

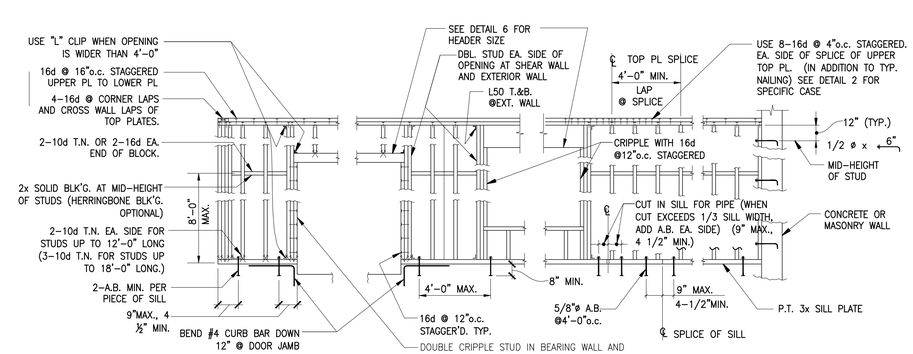

1 – TYPICAL STUD WALL FRAMING ELEVATIONS

SCALE: NONE

ZHIHUI HUANG

1205 CABRILLO ST
EL CERRITO
CA 94530
T. 510.333.1383

jeffuang@gmail.com

OWNER

STEVEN SU
1552 MARIN AVE
ALBANY
CA 94706
T. 510-520-5069

ssteven510@yahoo.com

1552 MARIN AVE 2ND UNIT
ALBANY, CA 94706

REGISTERED PROFESSIONAL ENGINEER
ZHIHUI HUANG
No. S5451
Exp. 06-30-16
STRUCTURAL
STATE OF CALIFORNIA

DATE:	ISSUE:
03.10.2015	PERMIT SET

PROJECT NUMBER: 1501

TITLE: TYPICAL DETAILS II

SCALE: AS NOTED

SHEET: S1.2

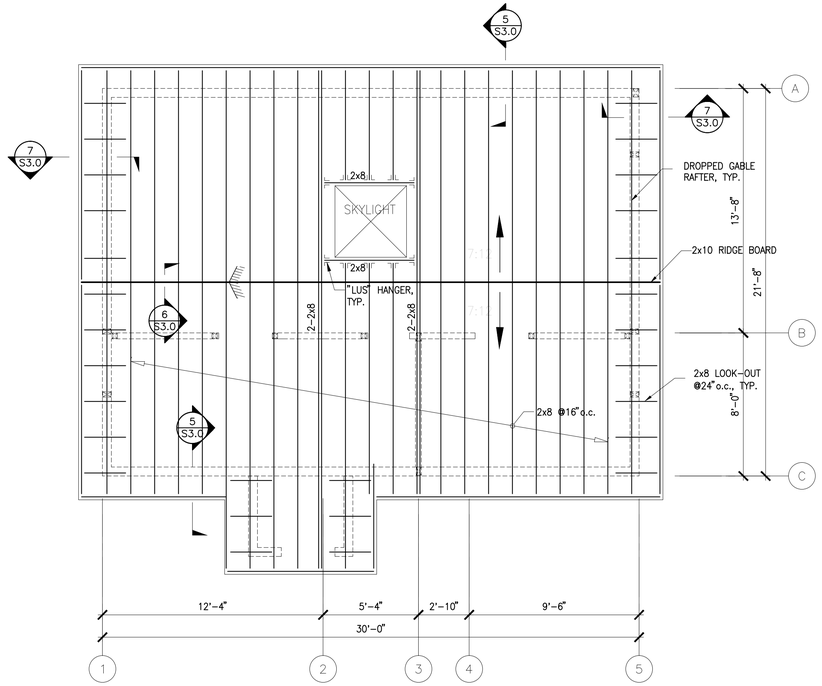

4 ROOF PLAN
SCALE: 1/4" = 1'-0"

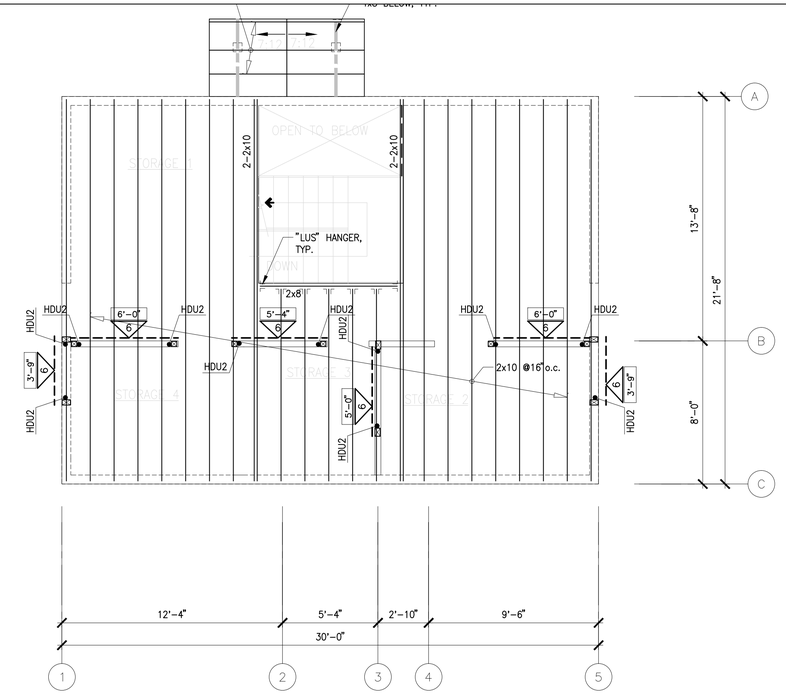

3 UPPER LEVEL PLAN
SCALE: 1/4" = 1'-0"

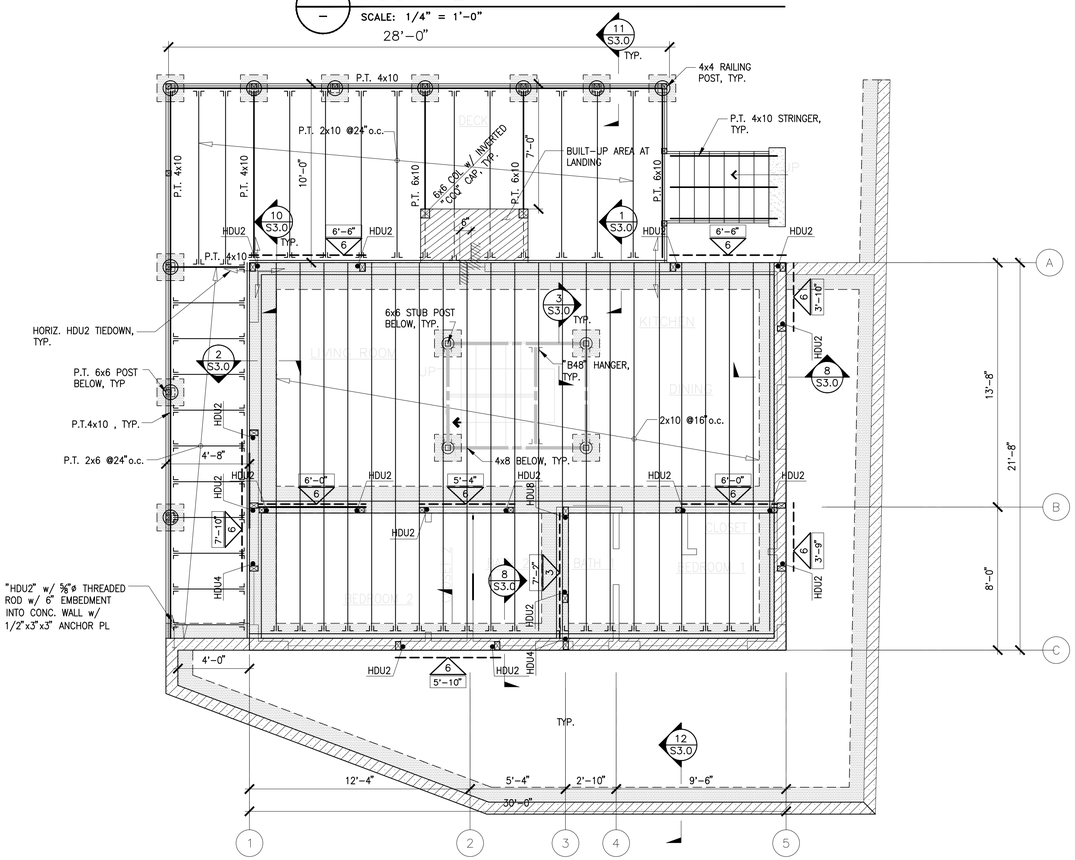

2 MAIN LEVEL PLAN
SCALE: 1/4" = 1'-0"

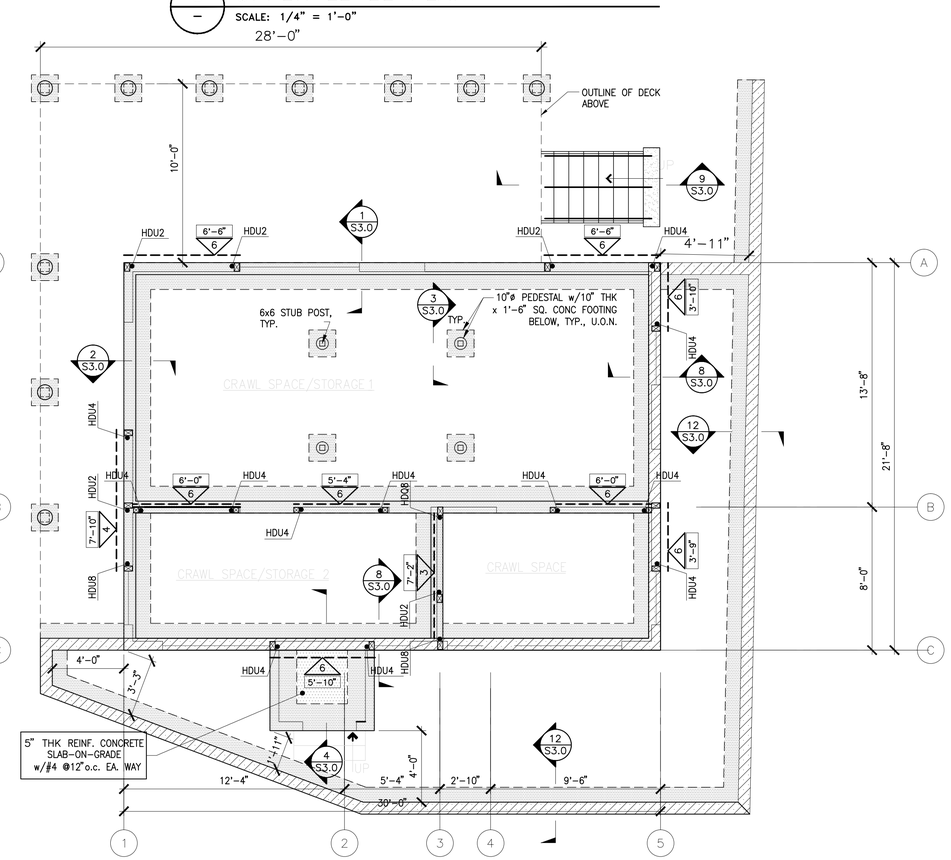

1 FOUNDATION PLAN
SCALE: 1/4" = 1'-0"

ZHIHUI HUANG
1205 CABRILLO ST
EL CERRITO
CA 94530
T. 510.333.1383
jeffuang@gmail.com

OWNER
STEVEN SU
1552 MARIN AVE
ALBANY
CA 94706
T. 510-520-5069
ssteven510@yahoo.com

1552 MARIN AVE 2ND UNIT
ALBANY, CA 94706

REGISTERED PROFESSIONAL ENGINEER
ZHIHUI HUANG
No. S5451
Exp. 06-30-16
STRUCTURAL
STATE OF CALIFORNIA

DATE:	ISSUE:
08.17.2015	PERMIT SET

PROJECT NUMBER: 1501

TITLE: ELEVATIONS

SCALE: AS NOTED

SHEET: **S2.0**

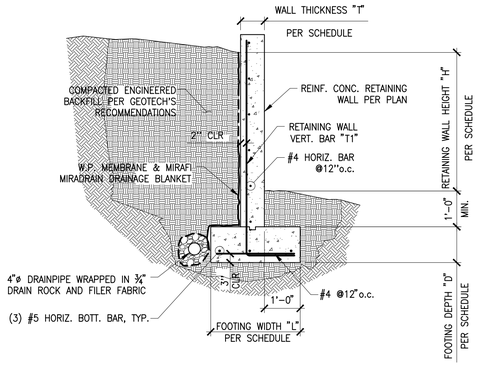

RETAINING WALL SCHEDULE FOR (0'<"H"≤4')			$f_c' = 2{,}500$ psi		
MAX RETAINING HEIGHT "H"	WALL THICKNESS "T"	FOOTING WIDTH "L"	FOOTING DEPTH "D"	VERT. BARS	REMARKS
2'-0"	6"	2'-0"	1'-0"	#4 @16" o.c.	
4'-0"	8"	2'-6"	1'-0"		

12 – SITE RETAINING WALL DETAIL
SCALE: 1/2"=1'-0"

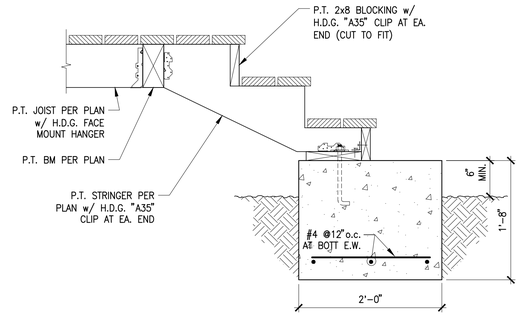

9 – DETAIL
SCALE: 1"=1'-0"

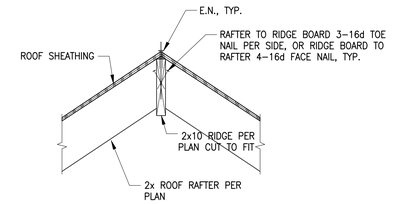

6 – DETAIL
SCALE: 1"=1'-0"

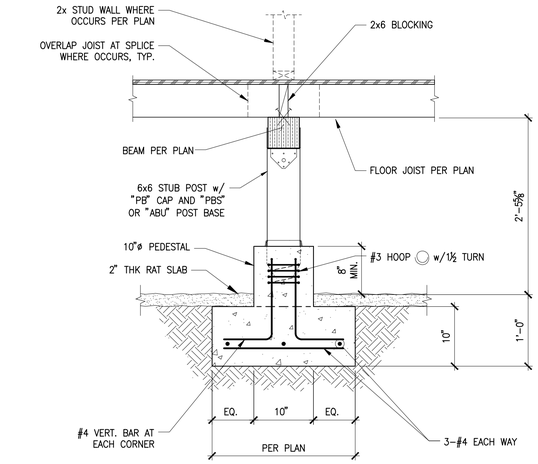

3 – DETAIL
SCALE: 1"=1'-0"

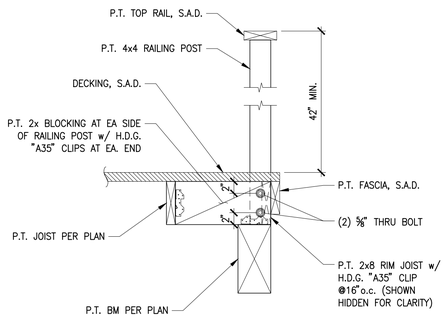

11 – DETAIL
SCALE: 1"=1'-0"

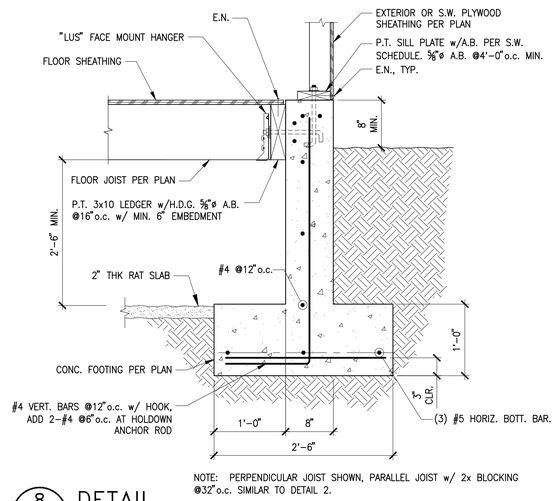

8 – DETAIL
SCALE: 1"=1'-0"

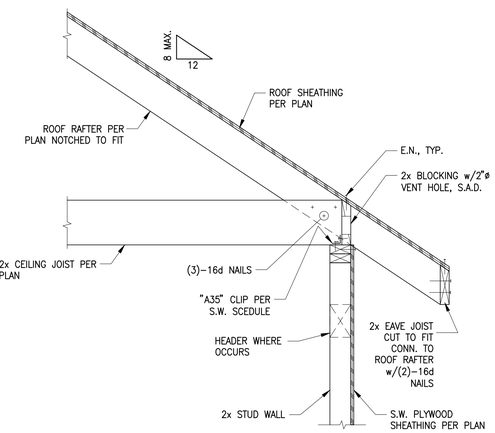

5 – DETAIL
SCALE: 1"=1'-0"

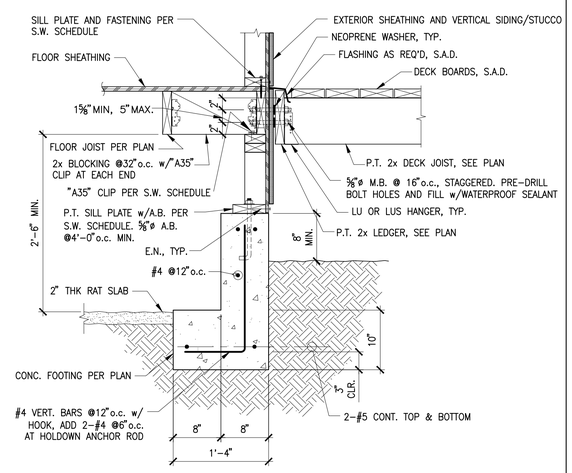

B: PARALLEL JOIST

2 – DETAIL
SCALE: 1"=1'-0"

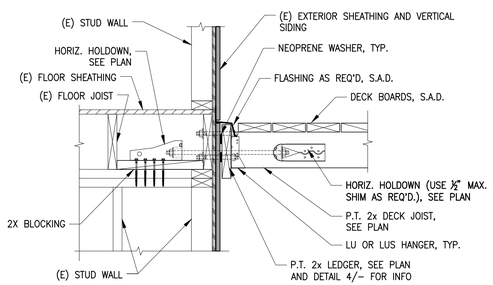

10 – DECK ATTACHMENT FOR LATERAL LOADS
SCALE: 1"=1'-0"

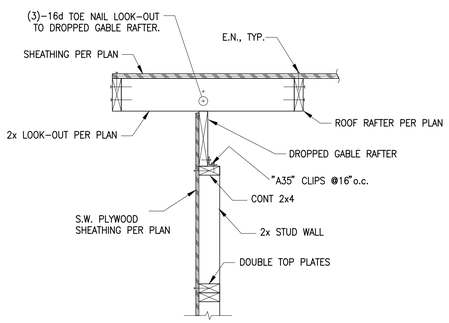

7 – DETAIL
SCALE: 1"=1'-0"

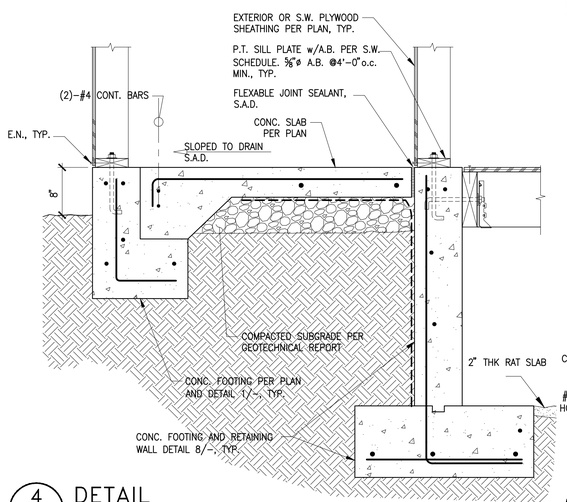

4 – DETAIL
SCALE: 1"=1'-0"

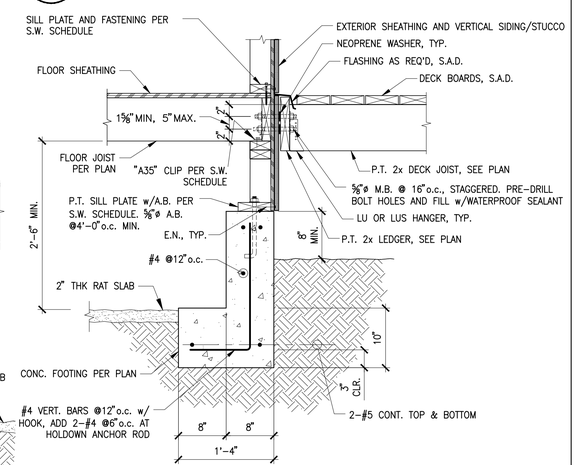

A: PERPENDICULAR JOIST

1 – DETAIL
SCALE: 1"=1'-0"

ZHIHUI HUANG
1205 CABRILLO ST
EL CERRITO
CA 94530
T. 510.333.1383
jeffuang@gmail.com

OWNER
STEVEN SU
1552 MARIN AVE
ALBANY
CA 94706
T. 510-520-5069
ssteven510@yahoo.com

1552 MARIN AVE 2ND UNIT
ALBANY, CA 94706

REGISTERED PROFESSIONAL ENGINEER
ZHIHUI HUANG
No. S5451
Exp. 06-30-16
STRUCTURAL
STATE OF CALIFORNIA

DATE:	ISSUE:
08.17.2015	PERMIT SET

PROJECT NUMBER: 1501

TITLE: DETAILS I

SCALE: AS NOTED

SHEET: S3.0

Single-Family GreenPoint Checklist

The GreenPoint checklist tracks green features incorporated into the home. The recommended minimum requirements for a green home are: Earn a total of 50 points or more; obtain the following minimum points per category: Energy (11), Indoor Air Quality/Health (5), Resources (6), and Water (3); and meet the prerequisites A.3.a (50% construction waste diversion) and N.1 (Incorporate Green Points checklist in blueprints).

The green building practices listed below are described in the New Home Construction Green Building Guidelines, available at www.builditgreen.org.

PROJECT ADDRESS: 1552 Marin Ave, Albany, CA 94706

		Community	Energy	IAQ/Health	Resources	Water
		0 / 24	0 / 75	0 / 35	0 / 50	0 / 30

A. SITE (Possible Points)

	Item	Community	Energy	IAQ/Health	Resources	Water
	1. Protect Native Soil and Minimize Disruption of Existing Plants & Trees					
[x]	a. Protect Native Topsoil from Erosion and Reuse after Construction	1				1
[x]	b. Limit and Delineate Construction Footprint for Maximum Protection					1
[ ]	**2. Deconstruct Instead of Demolishing Existing Buildings On Site**					
	3. Recycle Job Site Construction Waste (Including Green Waste)					
[x]	*a. Minimum 50% Waste Diversion by Weight (Recycling or Reuse) - Required*				R	
[x]	b. Minimum 65% Diversion by Weight (Recycling or Reuse)				2	
[ ]	c. Minimum 80% Diversion by Weight (Recycling or Reuse)					
	4. Use Recycled Content Aggregate (Minimum 25%)					
[x]	a. Walkway and Driveway				1	
[ ]	b. Roadway Base					

B. LANDSCAPING (Possible Points)

	Item	Community	Energy	IAQ/Health	Resources	Water
	1. Construct Resource-Efficient Landscapes					
[x]	a. No Invasive Species Listed by Cal-IPC Are Planted					1
[x]	b. No Plant Species Will Require Hedging				1	
[x]	c. 75% of Plants Are California Natives or Mediterranean Species					1
[ ]	**2. Use Fire-Safe Landscaping Techniques**					
	3. Minimize Turf Areas In Landscape Installed by Builder					
[x]	a. All Turf Will Have a Water Requirement Less than or Equal to Tall Fescue					2
[x]	b. Turf Shall Not Be Installed on Slopes Exceeding 10% or in Areas Less than 8 Feet Wide					2
[x]	c. Turf is <33% of Landscaped Area					2
[ ]	d. Turf is <10% of Landscaped Area					
[x]	**4. Plant Shade Trees**		1			1
[ ]	**5. Implement Hydrozoning: Group Plants by Water Needs**					
	6. Install High-Efficiency Irrigation Systems					
[ ]	a. System Uses Only Low-Flow Drip, Bubblers, or Low-flow Sprinklers					
[ ]	b. System Has Smart (Weather-Based) Controllers					
[x]	**7. Apply Two Inches of Compost in the Top 6 to 12 Inches of Soil**					2
[ ]	**8. Mulch All Planting Beds to the Greater of 2 Inches or Local Water Ordinance Requirement**					
[x]	**9. Use 50% Salvaged or Recycled-Content Materials for 50% of Non-Plant Landscape Elements**				1	
[x]	**10. Reduce Light Pollution by Shielding Fixtures and/or Directing Light Downward**	1				

C. FOUNDATION (Possible Points)

	Item	Community	Energy	IAQ/Health	Resources	Water
	1. Incorporate Recycled Flyash in Concrete					
[x]	a. Minimum 20% Flyash				1	
[x]	b. Minimum 25% Flyash				1	
[ ]	**2. Use Frost-Protected Shallow Foundation in Cold Areas (C.E.C. Climate Zone 16)**					
[ ]	**3. Use Radon Resistant Construction (In At-Risk Locations Only)**					

D. STRUCTURAL FRAME & BUILDING ENVELOPE (Possible Points)

	Item	Community	Energy	IAQ/Health	Resources	Water
	1. Apply Optimal Value Engineering					
[ ]	a. 2x4 Studs at 24-Inch On Center Framing					
[ ]	b. Door and Window Headers Sized for Load					
[ ]	c. Use Only Jack and Cripple Studs Required for Load					
	2. Use Engineered Lumber					
[ ]	a. Beams and Headers					
[ ]	b. Insulated Engineered Headers					
[ ]	c. Wood I-Joists or Web Trusses for Floors					
[ ]	d. Wood I-Joists or Rafters					
[ ]	e. Engineered or Finger-Jointed Studs for Vertical Applications					
	3. Use FSC-Certified Wood					
[x]	a. Dimensional Studs: Minimum 40%				2	
[x]	b. Dimensional Studs: Minimum 70%				2	
[x]	c. Panel Products: Minimum 40%				1	
[x]	d. Panel Products: Minimum 70%				1	
[ ]	**4. Design Energy Heels on Trusses (75% of Attic Insulation Height at Outside Edge of Exterior Wall)**					
[ ]	**5. Design Trusses to Accommodate Ductwork**					
	6. Use Oriented Strand Board (OSB)					
[x]	a. Subfloor				1	
[x]	b. Sheathing				1	
[ ]	**7. Use Recycled-Content Steel Studs for 90% of Interior Wall Framing**					
	8. Use Solid Wall Systems (Includes SIPs, ICFs, & Any Non-Stick Frame Assembly)					
[ ]	a. Floors					
[ ]	b. Walls					
[ ]	c. Roofs					
[ ]	**9. Thermal Mass Walls: 5/8-Inch Drywall on All Interior Walls or Walls Weigh more than 40 lb/cu.ft.**					
	10. Design and Build Structural Pest Controls					
[ ]	a. Install Termite Shields & Separate All Exterior Wood-to-Concrete Connections by Metal or Plastic Fasteners/Dividers					
[ ]	b. All New Plants Have Trunk, Base, or Stem Located At Least 36 Inches from Foundation					
	11. Reduce Pollution Entering the Home from the Garage					
[ ]	a. Tightly Seal the Air Barrier between Garage and Living Area					
[ ]	b. Install Separate Garage Exhaust Fan					
	12. Install Overhangs and Gutters					
[x]	a. Minimum 16-Inch Overhangs and Gutters				1	
[ ]	b. Minimum 24-Inch Overhangs and Gutters					

E. EXTERIOR FINISH (Possible Points)

	Item	Community	Energy	IAQ/Health	Resources	Water
[x]	**1. Use Recycled-Content (No Virgin Plastic) or FSC-Certified Wood Decking**				2	
[ ]	**2. Install a Drainage Plane (Rain Screen Wall System)**					
[x]	**3. Use Durable and Non-Combustible Siding Materials**				1	
[x]	**4. Select Durable and Non-Combustible Roofing Materials**				2	

F. PLUMBING (Possible Points)

	Item	Community	Energy	IAQ/Health	Resources	Water
	1. Distribute Domestic Hot Water Efficiently					
[ ]	a. Insulate Hot Water Pipes from Water Heater to Kitchen					
[ ]	b. Insulate All Hot Water Pipes OR Install On-Demand Hot Water Circulation System in conjunction with F.1.a Insulate Hot Water Pipes from Water Heater to Kitchen					
[ ]	c. Locate the Water Heater within 25 feet of All Hot Water Fixtures and Appliances					
[ ]	d. Use Engineered Parallel Piping					
[ ]	**2. Install Only High Efficiency Toilets (Dual-Flush or <=1.3 gpf)**					

G. APPLIANCES (Possible Points)

	Item	Community	Energy	IAQ/Health	Resources	Water
	1. Install ENERGY STAR Dishwasher					
[x]	a. ENERGY STAR		1			
[x]	b. Dishwasher Uses No More than 6.5 Gallons/Cycle		1			
[x]	**2. Install ENERGY STAR Clothes Washing Machine with Water Factor of 6 or Less**		1			
	3. Install ENERGY STAR Refrigerator					
[x]	a. ENERGY STAR: 15% above Federal Minimum		1			
[ ]	b. Super-Efficient Home Appliance Tier 2: 25% above Federal Minimum					
[ ]	**4. Install Built-In Recycling Center**					

H. INSULATION (Possible Points)

	Item	Community	Energy	IAQ/Health	Resources	Water
	1. Install Insulation with 75% Recycled Content					
[x]	a. Walls and/or Floors				1	
[x]	b. Ceilings				1	
	2. Install Insulation that is Low-Emitting (Certified Section 01350)					
[x]	a. Walls and/or Floors			1		
[x]	b. Ceilings			1		
[ ]	**3. Pre-Drywall Inspection Shows Quality Installation of Insulation**					

I. HEATING, VENTILATION & AIR CONDITIONING (Possible Points)

	Item	Community	Energy	IAQ/Health	Resources	Water
[ ]	**1. Design and Install HVAC System to ACCA Manual J, D, and S Recommendations**					
	2. Install Sealed Combustion Units					
[ ]	a. Furnaces					
[ ]	b. Water Heaters					
[x]	**3. No Fireplace or Sealed Gas Fireplace with Efficiency Rating Not Less Than 60%**			1		
[ ]	**4. Install ENERGY STAR Ceiling Fans with CFLs in Living Areas and Bedrooms**					
	5. Install Mechanical Ventilation System for Nighttime Cooling (Points are Cumulative up to 3)					
[ ]	a. Whole House Fan					
[ ]	b. Automatically Controlled Integrated System					
[ ]	c. Integrated System with Variable Speed Control					
[ ]	**6. Install Air Conditioning with Non-HCFC Refrigerants**					
	7. Design and Install Effective Ductwork					
[x]	a. Install HVAC Unit and Ductwork within Conditioned Space		3			
[x]	b. Use Duct Mastic on All Duct Joints and Seams		1			
[ ]	c. Install Ductwork under Attic Insulation (Buried Ducts)					
[ ]	d. Pressure Balance the Ductwork System for Master Bedroom					
[x]	e. Protect Ducts during Construction and Clean All Ducts before Occupancy			1		
[ ]	**8. Install High Efficiency HVAC Filter (MERV 6+)**					
[ ]	**9. Install Zoned, Hydronic Radiant Heating with Slab Edge Insulation**					
	10. Install Mechanical Ventilation System					
[ ]	a. Any Whole House Ventilation System That Meets ASHRAE 62.2					
[x]	b. Install ENERGY STAR Bathroom Fan			1		
[x]	c. All Bathroom Fans Are on Timer or Humidistat			1		
[ ]	**11. Use Low-Sone Range Hood Vented to the Outside**					
[x]	**12. Install Carbon Monoxide Alarm(s)**			1		

J. BUILDING PERFORMANCE (Possible Points)

	Item	Community	Energy	IAQ/Health	Resources	Water
	1. Design and Build High Performance Homes (2 points for each 1% above T-24, up to 30 pts) *Enter the percent above Title 24 in the cell at left. Any value over 15% will automatically earn 30 points.*					
[ ]	**2. House Obtains ENERGY STAR with Indoor Air Package Certification**					
	3. Inspection and Diagnostic Evaluations					
[ ]	a. Third Party Energy and Green Building Review of Home Plans					
[ ]	b. Blower Door Test Performed					
[ ]	c. House Passes Combustion Safety Backdraft Test					

K. RENEWABLE ENERGY (Possible Points)

	Item	Community	Energy	IAQ/Health	Resources	Water
[ ]	**1. Pre-Plumb for Solar Hot Water Heating**					
[ ]	**2. Install Solar Water Heating System**					
[x]	**3. Install Wiring Conduit for Future Photovoltaic Installation & Provide 200 ft^2 of South-Facing Roof**		2			
	4. Install Photovoltaic (PV) Panels					
[ ]	a. 1.2 kW System					
[ ]	b. 2.4 kW System					
[ ]	c. 3.6 kW or more					

L. FINISHES (Possible Points)

	Item	Community	Energy	IAQ/Health	Resources	Water
[ ]	**1. Provide Permanent Walk-Off Mats and Shoe Storage at Home Entrances**					
	2. Use Low/No-VOC Paint					
[x]	a. Low-VOC Interior Wall/Ceiling Paints (<50 gpl VOCs (Flat) and <150 gpl VOCs (Non-Flat))			1		
[ ]	b. Zero-VOC: Interior Wall/Ceiling Paints (<5 gpl VOCs (Flat))					
[x]	**3. Use Low VOC, Water-Based Wood Finishes (<150 gpl VOCs)**			2		
[x]	**4. Use Low-VOC Construction Adhesives (<70 gpl VOCs) for All Adhesives**			2		
[ ]	**5. Use Recycled-Content Paint**					
	6. Use Environmentally Preferable Materials for Interior Finish: A) FSC-Certified Wood, B) Reclaimed Lumber, C) Rapidly Renewable D) Recycled-Content or E) Finger-Jointed At Least 50% of Each Material (1 pt each):					
[x]	a. Cabinets				1	
[x]	b. Interior Trim				1	
[x]	c. Shelving				1	
[x]	d. Doors				1	
[x]	e. Countertops				1	
	7. Reduce Formaldehyde in Interior Finish (Section 01350) for At Least 50% of Each Material Below:					
[x]	a. Cabinets			1		
[x]	b. Interior Trim			1		
[x]	c. Shelving			1		
[x]	d. Subfloor			1		
[ ]	**8. After Installation of Finishes, Test of Indoor Air Shows Formaldehyde Level <27ppb**					

M. FLOORING (Possible Points)

	Item	Community	Energy	IAQ/Health	Resources	Water
	1. Use Environmentally Preferable Flooring: A) FSC-Certified or Reclaimed Wood, B) Rapidly Renewable Flooring Materials, C) Recycled-Content Ceramic Tiles, D) Exposed Concrete as Finished Floor or E) Recycled-Content Carpet. *Note: Flooring Adhesives Must Have <50 gpl VOCs.*					
[x]	a. Minimum 15% of Floor Area			1		
[x]	b. Minimum 30% of Floor Area			1		
[ ]	c. Minimum 50% of Floor Area					
[ ]	d. Minimum 75% of Floor Area					
[ ]	**2. Thermal Mass Floors: Floor Covering Other than Carpet on 50% or More of Concrete Floors**					
[ ]	**3. Flooring Meets Section 01350 or CRI Green Label Plus Requirements (50% Minimum)**					

N. OTHER (Possible Points)

	Item	Community	Energy	IAQ/Health	Resources	Water
[x]	***1. Incorporate Green Points Checklist in Blueprints - Required***					
[ ]	**2. Develop Homeowner Manual of Green Features/Benefits**					
	3. Community Design Measures & Local Priorities: See the Community Planning & Design section in Chapter 4 of the New Home Guidelines for measures. Maximum of 20 points for suggested measures. Local requirements may also be listed here.					
1	1. Additions less than 50% increase in floor area					
	2. Additions les than 200sq.ft. or resulting in less than 1,500sq.ft.					
	3. Seismic upgrade of existing building					
	4. For having a hybrid or zero emissions vehicle					
	5. For having no automobile					
6	6. Planting more than one street tree when feasible					
	7. Earthquake kit					
	4. Innovation: List innovative measures that meet the green building objectives of the Guidelines. Enter up to a maximum combined total of 20 pts. See Innovation Checklist for suggested measures.					
	Innovation in **Community**: Enter description here					
	Innovation in **Energy**: Enter description here					
	Innovation in **IAQ/Health**: Enter description here					
	Innovation in **Resources**: Enter description here					
	Innovation in **Water**: Enter description here					

Summary

	Community	Energy	IAQ/Health	Resources	Water
Points Achieved from Specific Categories	9	11	18	28	13
Total Points Achieved	79				

Project has not yet met the recommended minimum requirements

- *Total Project Score of At Least 50 Points*
- *Minimum points in specific categories: Energy (11), IAQ/Health (5), Resources (6), Water (3)*
- *Required measures A.3.a and/or N.1*

ZHIHUI HUANG
1205 cabrillo St
el cerrito
Ca 94530
T. 510.333.1383
jeffuang@gmail.com

Owner
Steven su
1552 Marin Ave
Albany
CA 94706
T. 510-520-5069
ssteven510@yahoo.com

1552 MARIN AVE 2ND UNIT
ALBANY, CA 94706

REGISTERED PROFESSIONAL ENGINEER
ZHIHUI HUANG
No. S5451
Exp. 06-30-16
STRUCTURAL
STATE OF CALIFORNIA

DATE: ISSUE:
08.17.2015 PERMIT SET

PROJECT NUMBER: 1501

TITLE: GreenPoint Checklist

SCALE: AS NOTED

SHEET: T24