General Notes

General Notes

Building shall comply with 2013 **CBC, 2013 CRC, 2013 CMC, 2013 CPC, 2013 CEC, 2013 California Referenced Standards, 2013 California Energy Code and City of Albany Municipal Code** and any other governing regulations. Codes and Regulations shall be considered an essential part of these Specifications and, in the absence of definite requirements herein, the provisions of said Codes and Regulations shall be observed by the Contractor.

Workmanship: All shop and field work shall be performed by mechanics skilled and experienced in the fabrication and installation of the work involved. All work in this project shall be done in accordance with the best practices of the various trades involved and in strict accordance with the Contract Documents. All work shall be erected and installed plumb, level, square, true, and in proper alignment and relationship to the work of other trades. All finish work shall be free of defects.

Manufacturer's recommendations: Unless otherwise noted, all manufactured materials, products, processes, equipment, fixtures or the like shall be installed, applied, and/or utilized in accordance with the manufacturer's specifications, instructions, and/or directions.

Verify dimensions: Contractor shall verify all on site dimensions and conditions prior to starting work. Consult architect regarding significant discrepancies.

Allowances: Provide allowances in bid for: cabinets, tile, carpet, doors, hardware, light fixtures, appliances, hardwood, and any other items whose scope of work is not clearly determined in these working drawings.

Concrete shall be 3000 psi unless noted otherwise.
Concrete slabs shall be 5" thick with #4 bar at 18" o.c. each way at center of slab (unless otherwise shown on drawings)
Slab rests on 4" class 2 gravel on compacted soil.
Clear distance of reinforcing bars shall be as follows:
Wall surface: 1-1/2"
Formed surfaces in contact with earth: 2"
Unformed surfaces in contact with earth: 3" Lap all splices 48 bar diameters in concrete.

Reinforcing steel shall conform to ASTM 615 and shall be deformed bars, grade 60.

Lumber shall be as follows (unless otherwise noted on drawings):
All new lumber shall have 19% max. moisture content at time of installation.
Roof, floor and ceiling joists: Douglas fir No. 2 or better.
Studs: Douglas fir Stud grade.
Posts, beams and girders: Douglas fir No. 1.
All wood in contact with concrete : Pressure treated fir.
Microllam, Parallam products shall be by Trusjoist McMillan or equal (okay to substitute GPI or LPI) and installed per manufacturer's recommendations.
Plywood sheathing shall be as follows (unless otherwise noted on drawings):
Floors: At 16" O.C. framing provide 3/4" CDX or OSB Tongue & Groove plywood glued and nailed to joists. Glue shall be continuous 1/4" bead of heavy duty construction adhesive designed for this use. Nailing shall be 8d at 6" o.c. edges, 12" o.c. field. (At framing at 24" O.C. provide 1-1/8" sheathing with 10d nails at 6" O.C. at edges, 12" O.C. in the field.)
Roof: 1/2" OSB with radiant barrier with H-clips at unsupported butt joints. ("LP TechShield" or equal.) Stagger rows. Nail with 8d at 6" o.c. edges, 12" o.c. field.
Shear walls: 1/2" CDX struct 1 nailed as shown on drawings. Nail heads shall not pierce plywood lamination.
Pressure treated lumber shall receive galvanized or stainless steel fasteners. (Nails shall be hot dipped galvanized.)

Framing Wall framing shall be framed with 2x4 studs min. at 16" o.c. with double top plate and single bottom plate, unless otherwise noted Top plate lap splice shall be 48" minimum. Lap top plates at corners and wall intersections. Provide firestops as required by C.B.C. Provide double trimmers at all load bearing openings 4'-0" or wider.
Nail per table fastening schedule 2304.9.1 C.B.C.

Provide fire blocking and draft stopping which shall be installed in locations to cut off concealed vertical and horizontal draft openings to form an effective barrier between floors. between a top story and an attic space, and shall subdivide attic spaces, concealed roof spaces and floor-ceiling assemblies.

Holes bored in joists shall not be within 2 inches of the top or bottom of the joist and shall not exceed one third the depth of the joist.

If glu-lam beams are used, present glu-lam certificates to inspector.

Joists under and parallel to all bearing partitions shall be doubled.

Where new walls are added at existing concrete slab floor use pressure treated base plate and 5/8" wedge anchors (Tru-bolt by Red Head. ICBO report ER-5660.) Place bolts at 48" o.c. unless shown otherwise on Foundation Plan. Bolts shall penetrate 2 1/2" into existing concreted in 5/8" hole. Use 3" x 3" x 1/4" square washer.

LVL beams Laminated veneer lumber shall be by Trus-Joist, or equal. Beam widths of 3 1/2" or 5 1/4" may be created by stitch nailing 1 3/4" beams together with 16d 2 " from top and bottom at 12" o.c.

Gypsum Wall Board (Sheetrock): Provide sheetrock as follows:
1/2" sheetrock at walls and ceilings with 16" o.c. framing.
5/8" sheetrock at ceilings with 24" o.c. framing.
5/8" type X sheetrock at enclosed areas where garage wall abuts living space and under stairs.
Nail sheetrock edges with 1-3/8" dritite nails (8" o.c. walls, 7" o.c. ceilings). Screw field with screws that penetrate minimum 5/8" into wood (12" o.c.)
Provide square corner bead at all outside corners.
Tape, fill and sand all joints. **Texture** shall be as follows:
Match Existing

Closet shelves and poles: Closet shelves from 15" melamine.
S & P= shelf and pole (pole height 66")
S & 2P= shelf and 2 poles (pole heights 42" and 84")

Flashing: All sheet metal **flashing** shall be minimum 26 gauge galvanized metal unless otherwise noted. Lap all joints 12" minimum.
Flash and counterflash all roof to wall intersections.

Gutters and downspouts shall be galvanized steel (bonderized to recieve paint) unless shown otherwise on drawings. Provide downspouts at each gutter. Downspouts shall discharge into 3" diameter pipe at ground and travel underground at 1/8" per foot slope to daylight away from house.

Exterior Window trim: Redwood with all sides primed with stain block oil primer.

Electrical

Phone wire shall be 6 wire system to allow three different phone lines in house.
Mounting height of electrical outlets shall be 14" unless otherwise indicated.
Label all circuits in panel box.
Provide separate 20 amp circuits for each bathroom.
Provide separate 30 amp circuit for laundry room.
All new outlets in bedrooms shall be AFCI (Arc Fault Circuit Interrupter.)
Provide minimum 2 small appliance branch circuits for the kitchen limited to supplying wall and counter space outlets only.

If project calls for **Ufer ground** at the Elec or Foundation Plan, then provide an appropriately sized copper wire from elec box into conc foundation clamped 20' along length of lowest 5/8" rebar.
Smoke Detectors: Provide smoke detectors in all bedrooms and hallways as shown on floor plans.

Plumbing

Shower and tub controls shall have individual control valves of the pressure balance or thermostatic micing valve type per CPC 418.0.

Provide approved air gap fitting at dishwasher to waste connection per CPC Sec.801.1.

Water heater shall be secured to solid framing with metal straps specifically designed and manufactured to anchor water heaters during earth quakes.

Provide non-removable back-flow device at all hose bibs per CPC 603.5.7.

Provide T & P valve drain line for water heater and discharge to the exterior.

No under-floor clean-out shall be located more than 20 feet from a crawl space access panel.

Provide 12" min clearance in front of 2" Ø or smaller under-floor clean-out piping and 18" in front of larger under-floor clean-out piping.

Clothes washers with quick-acting valves shall be provided with water hammer to absorb the high pressures per CPC 609.10.

Underground non-metallic gas piping shall be provided with continuous insulated 18 AWG copper tracer wire.

Maximum flow rate for new plumbing fixtures per CALGreen 4.303. Showerheads 2 gal/min. Faucets 1.5 gal/min. Kitchen Faucets 1.8 gal/ min. Water Closets 1.28gal/ flush.

Showers & Bathtubs with Showers shall have backing material per 2013 CRC R307.2 and shall be finished with a nonabsorbent finish to not less than 6' above the floor.

Railing:

Guardrail shall have 1 1/4" pickets spaced equally at approx 5" o.c. (so that 4" sphere cannot pass through.) Top rail shall be minimum 42" ht with (3) #12 screws at each end minimum 1 1/2" into solid support. Intermediate rails shall be anchored to adequately support 25 lbs per lineal foot at right angle to the top rail.
Handrail shall be 1 1/4" to 2" across. Top of rail shall be 34" above stair nosings (if handrail is at wall. 36" if handrail is also serving as guardrail) and be supported at 4' o.c. into solid framing or newel post and shall be sufficient to support 200 lb force per CBC table 16-B.

Mechanical

House shall have heating facilities capable of maintaining a room temperature of 68 degrees at 3' above floor in all habitable rooms.

Furnace installation shall be in compliance with Title 24 report for this project. See Mech plan for furnace layout and register locations. Ducts shall have R-4.2 insulation. Duct layout shall be designed by licensed mechanical contractor experienced and qualified to design system for proper air flow to each register to provice even disbursal of air appropriate for each space to be comfortable.

Clothes dryer shall have a rigid metal duct vented to outside with a back-draft damper on a hooded outside terminus. Use 4" duct and max 2 elbows if length of duct is less than 14'. Use 5" duct if length is between 14' and 93'. Duct shall not terminate within 3 feet of any opening into the building.

Clothes dryer and domestic range exhaust duct shall be metal with smooth surfaces. Flrxible duct shall be limited to 6 feet in length max.

All environmental air ducts shall terminate a minimum of 3' away from any openings into the building per CMC 504.5.

Furnace and water heater installation shall comply with CMC chapters 3 & 9 and CPC 507. Combustion air shall comply with chapter 7.

Outdoor A/C suction line insulation exposed to weather shall be protected from UV deterioration or physical damage per CEES 150(j)2.

Bathroom Exhaust Fans shall be controlled by a humidistat control capable of adjustment between a relative humidity range of 50% to 80% per CALGreen Sec 4.506.

All new kitchen hoods, dryer vents and bath fans shall have backdraft dampers per CALGreen Sec 4.506.1.

Construction Waste Reduction, Disposal and Recycling

Per 2013 CGBC Recycle ans/ or salvage for reuse a minimum of 50% of the nonhazardous construction and demolition waste in accordance with one of the following:
1. Comply with a more stringent local construction and demolition waste management ordinance; or
2. A construction waste management plan per Section 4.408.3; or
3. A waste management company per Section 4.408.3; or
4. The waste stream reduction alternative per Section 4.408.4.

Building Maintenance and Operation

Per 2013 CGBC 4.410.1 an operation and maintenance manual shall be provided to the building occupant or owner.

Pollutant Control

Per 2013 CGBC 4.504.1 duct openings and other related air distribution component openings shall be covered during construction.
Per 2013 CGBC 4.504.2.1 & 4.504.2.2 Adhesives, sealants, caulks, paints and stains shall be compliant with VOC and other compound limits.
Per 2013 CGBC 4.504.2.3 Aerosal paints and coatings shall be compliant with product weighted MIR limits for ROC and other toxic compounds.
Per 2013 CGBC 4.504.2.4 Documentation shall be provided to verify that compliant VOC limit finish materials have been used.
Per 2013 CGBC 4.504.3 carpet and carpet systems shall be compliant with VOC limits.
Per 2013 CGBC 4.504.4 50% of lfoor area receiving resilient flooring shall comply with the VOC emission limits defined in the Collaborative for high Performance Schools (CHPS) High Performance Products Database or be certified under the Resilient Floor Covering Institute (RFCI) FloorScore program; or meet California Dept. of Health, "Standard Method for the Testing and Evaluation of Volitale Organic Chemical Emissions from Indoor Sources Using Environmental Chambers", Version 1.1, Feb. 2010. (Also known as Specification 01350.)
Per 2013 CGBC 4.501.5 particleboard, medium density fiberboard (MDF) and hardwood plywood used in interior finish systems shall comply with low formaldehyde emission standards.

Interior Moisture Control

Per 2013 CGBC 4.505.2 vapor retarder and capillary break is installed at slab on grade foundations.
Per 2013 CGBC 4.505.3 Moisture content of building materials used in wall and floor framing is checked before enclosure.

Indoor Air Quality and Exhaust

Per 2013 CGBC 4.506.1 exhaust fans which terminate outside the building are provided in every bathroom.

PROJECT INFO

PROJECT DESCRIPTION:
REMODEL KITCHEN & LAUNDRY ROOM.
ENCLOSE EXG REAR PORCH TO ADD 20 S.F. TO KITCHEN.

OCCUPANCY GROUP R-3, U-1

CONST TYPE: V-B WITH 1-HR WALLS AT GARAGE
(NON-SPRINKLERED)

PROJECT SIZE: ADDITION 20 S.F.

LOT COVERAGE:

HOUSE	1,526 S.F.
ADDITION	20 S.F.
TOTAL	1,546 S.F.
LOT SIZE =	3,914 S.F.

HOUSE/LOT = 38.9% COVERAGE

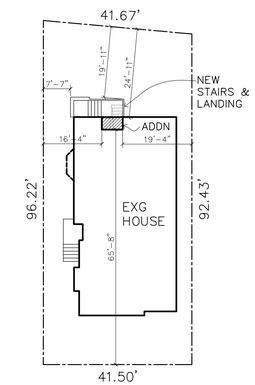

PORTLAND AVE

SITE PLAN

1" =20'

INDEX OF DRAWINGS	
1	SITE PLAN NOTES
2	FLOOR PLAN AND ELEC PLAN
3	SECTION
4	ELEVATIONS DETAILS
5	FND & FRMG PLANS
6	ENERGY COMPLIANCE
7	ENERGY COMPLIANCE

BATY RESIDENCE

Steven McKee - Architect
975 West K Street
Benicia CA 94510
(707) 746-6788
(707) 746-6767 fax
www.smckee.com

Revisions:

Date: 3/30/15
Drawn By: SM

REMODEL & ADDITION

BATY RESIDENCE
1259 PORTLAND AVENUE
ALBANY CA

Sheet: 1 OF 7

SITE PLAN NOTES

C:\Users\Steve\Documents\~CAD DRAWINGS\BATY\BATY ELEV REVISED.dwg 3-29-15 08:49:12 PM Steve

ELEC & MECH SYMBOLS

- ELEC OUTLET — ALL NEW OUTLETS SHALL BE AFCI UNLESS SHOWN AS GFCI — ALL 15/20 AMPERE RECPTACLES INSTALLED SHALL BE LISTED TAMPER-RESISTANT RECEPTACLES.
- ELEC OUTLET (ABOVE COUNTER HT)
- LIGHT SWITCH (D = TOGGLE DIMMER)
- TELEPHONE OUTLET (6 WIRE) (CAT 5= CATEGORY 5 COMPUTER WIRE)
- LIGHT FIXTURE
- LIGHT FIXTURE (WALL MOUNTED)
- 4" LED RECESSED LIGHT FIXTURE 13 WATTS
- 6" LED RECESSED LIGHT FIXTURE — ALL RECESSED LIGHTS SHALL BE I.C. (INSULATED CEILING) RATED
- SPOT LIGHT
- RECESSED LIGHT FIXTURE (WITH MOVABLE SPOT LIGHT)
- CEILING FAN w/ LIGHT KIT
- EXHAUST FAN — EXHAUST FANS SHALL BE CONTROLLED BY A HUMIDISTAT PER CALGREEN SECTION 4.506.
- SD SMOKE DETECTOR — SMOKE DETECTORS SHALL BE HARDWIRED WITH 110V AND INTERCONNECTED WITH BATTERY BACKUP IN ALL BEDROOMS AND HALLWAYS LEADING TO BEDROOMS
- CM CARBON MONOXIDE DETECTOR — CARBON MONOXIDE DETECTORS SHALL BE INSTALLED PER CBC R315 AND BE UL LISTED COMPLYING WITH UL2034 AND UL 2075
- DB DOOR BELL
- TV TELEVISION CABLE OUTLET
- FLUORESCENT LIGHT FIXURE
- HEATING REGISTER (CONFIGURE DUCTS TO MAINTAIN PROPER AIR FLOW TO EACH ROOM)
- WALL OUTLET HEATING REGISTER

LV	LOW VOLTAGE
FL	FLUORESCENT
WP	WATER PROOF; RATED FOR DAMP LOCATION
P	PENDANT
LED	LIGHT EMITTING DIODE
MS	MOTION SENSOR/ PHOTOCELL
OS	MANUAL-ON OCCUPANT SENSOR
GD	GARBAGE DISPOSAL
D	DIMMER
GFCI	GROUND FAULT CIRCUIT INTERUPTOR
AFCI	ARC FAULT CIRCUIT INTERUPTOR

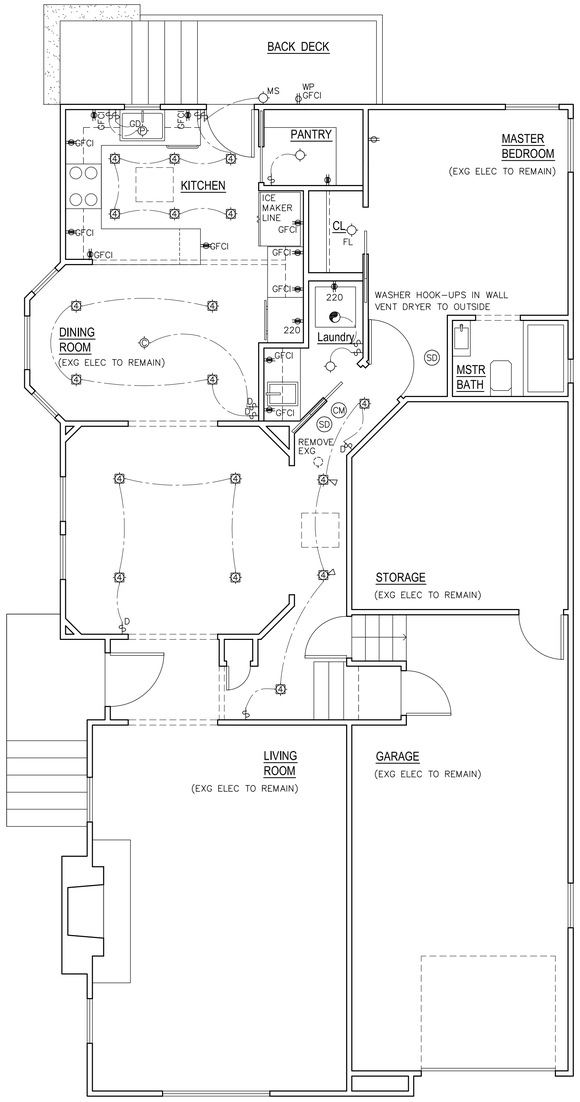

MECH/ ELEC PLAN

1/4"

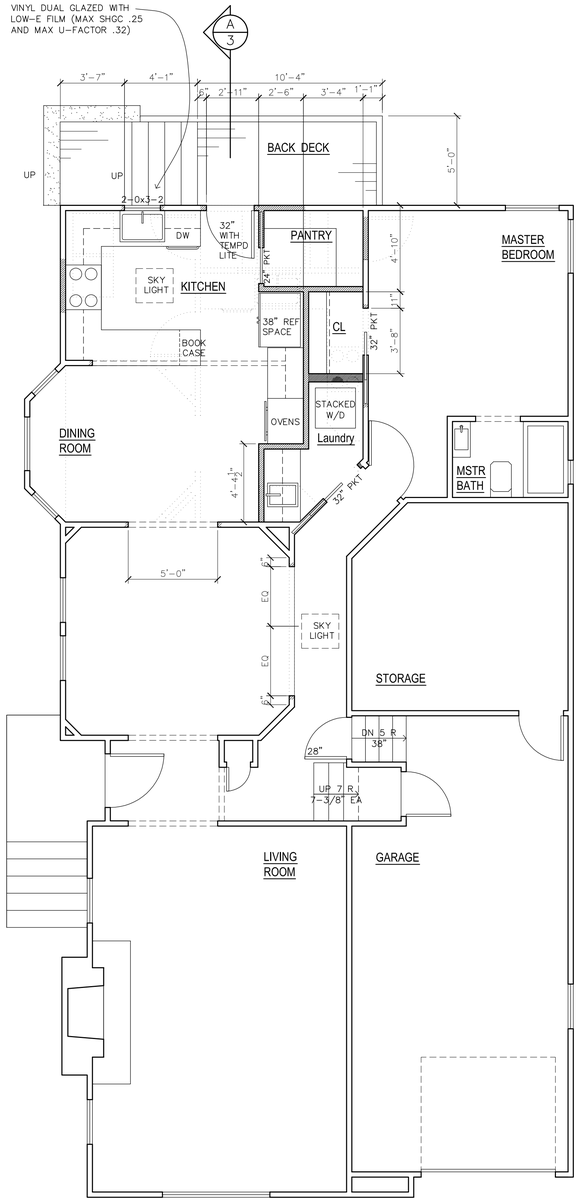

FLOOR PLAN

1/4"

N W E S

LEGEND

- NEW WALL 2X6 AT 16" O.C.
- NEW WALL 2X4 AT 16" O.C.
- EXG WALL
- REMOVE WALL

Steven McKee - Architect
975 West K Street
Benicia CA 94510
(707) 746-6788
(707) 746-6767 fax
www.smckee.com

Revisions:

Date: 3/30/15
Drawn By: SM

REMODEL & ADDITION

BATY RESIDENCE

1259 PORTLAND AVENUE
ALBANY CA

Sheet: 2 OF 7

FLOOR PLAN

C:\Users\Steve\Documents\~CAD DRAWINGS\BATY\BATY FLR PLN revised.dwg 3-29-15 08:54:02 PM Steve

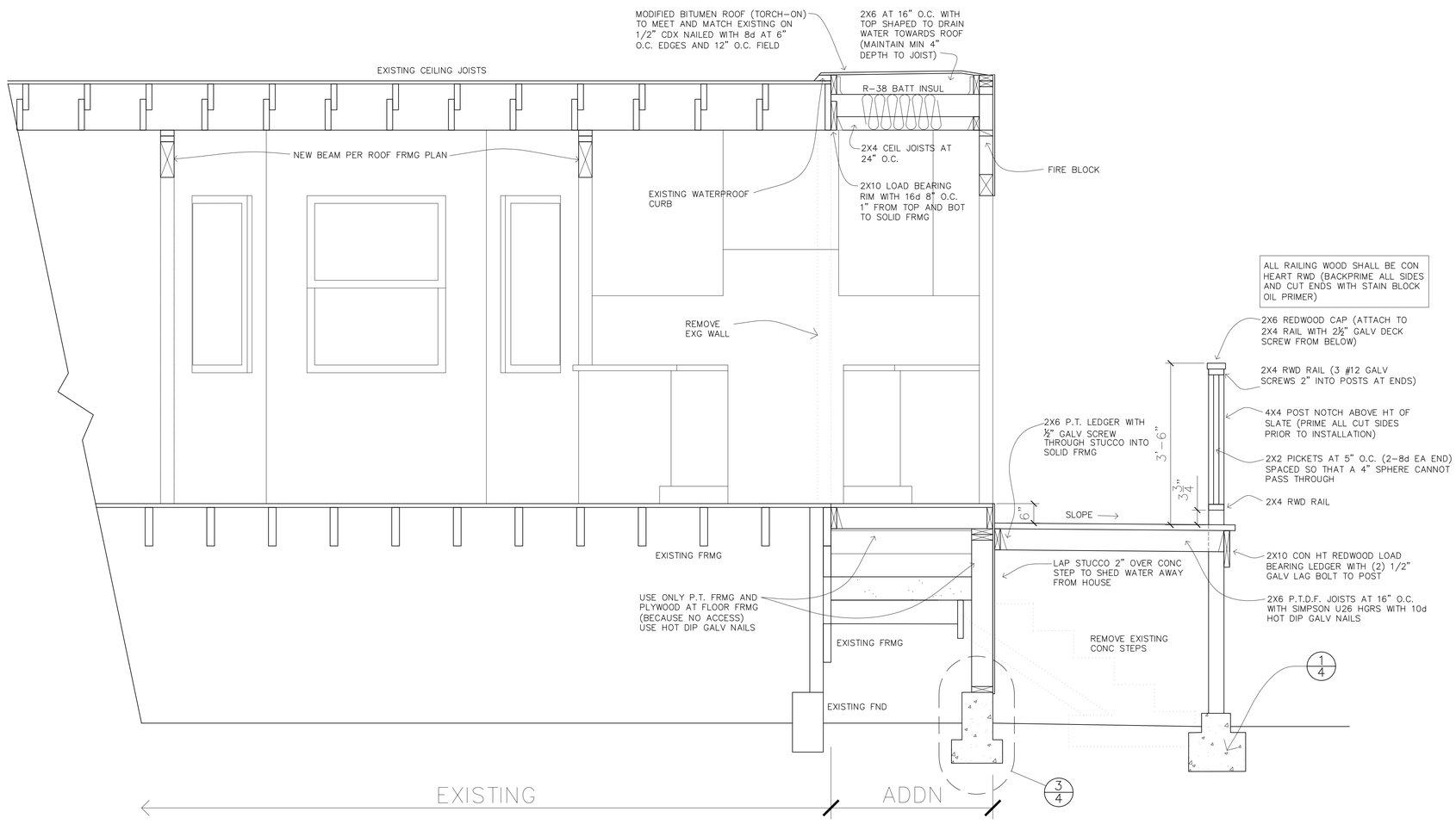

SECTION

A/3

3/4"

Steven McKee - Architect
975 West K Street
Benicia CA 94510
(707) 746-6788
(707) 746-6767 fax
www.smckee.com

Revisions:

Date: 3/30/15

Drawn By: SM

REMODEL & ADDITION

BATY RESIDENCE

1259 PORTLAND AVENUE
ALBANY CA

Sheet: 3 OF 7

SECTION

C:\Users\Steve\Documents\~CAD DRAWINGS\BATY\BATY ELEV REVSED.dwg 3-29-15 08:49:36 PM Steve

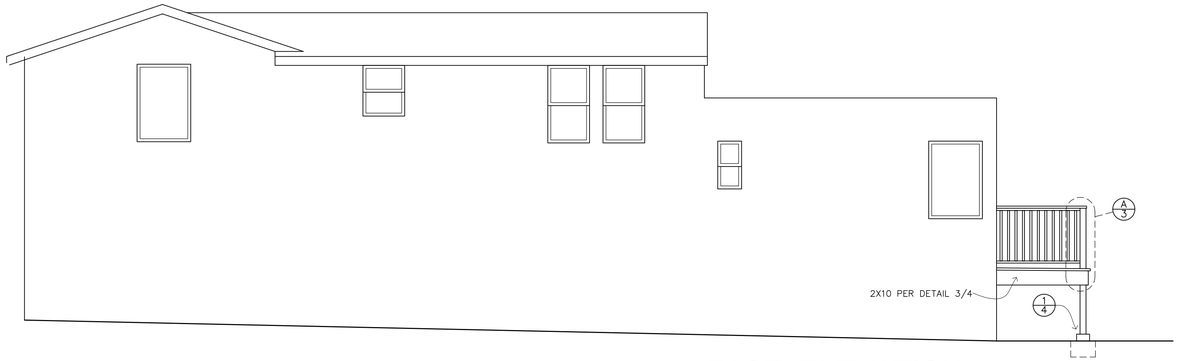

EAST ELEVATION

1/4"

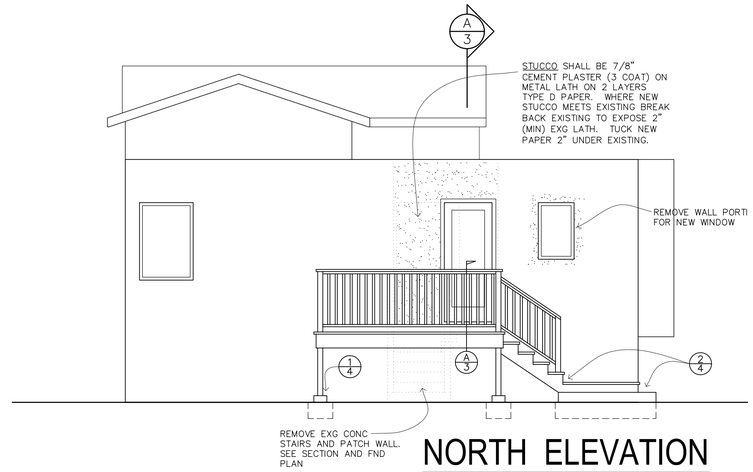

NORTH ELEVATION

1/4"

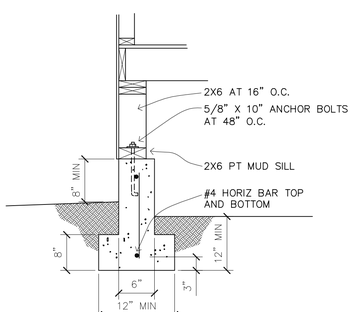

3/4 FOUNDATION

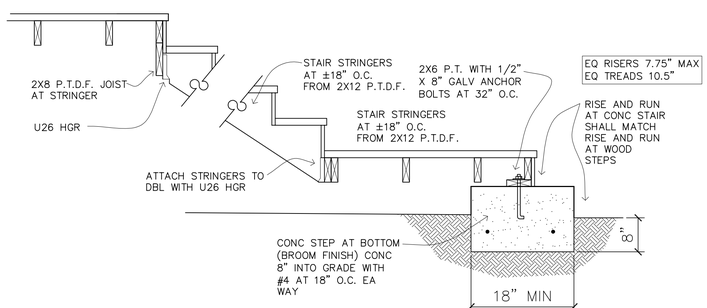

2/4 EXTERIOR STAIR

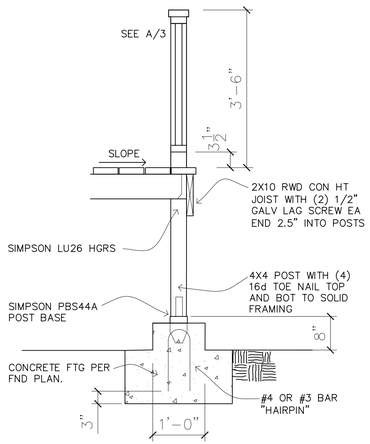

1/4 NEW FOOTING

NO SCALE

Steven McKee - Architect
975 West K Street
Benicia CA 94510
(707) 746-6788
(707) 746-6767 fax
www.smckee.com

Revisions:

Date: 3/30/15

Drawn By: SM

REMODEL & ADDITION

BATY RESIDENCE

1259 PORTLAND AVENUE
ALBANY CA

Sheet: 4 OF 7

ELEVATIONS DETAILS

C:\Users\Steve\Documents\~CAD DRAWINGS\BATY\BATY ELEV REVISED.dwg 3-29-15 08:50:06 PM Steve

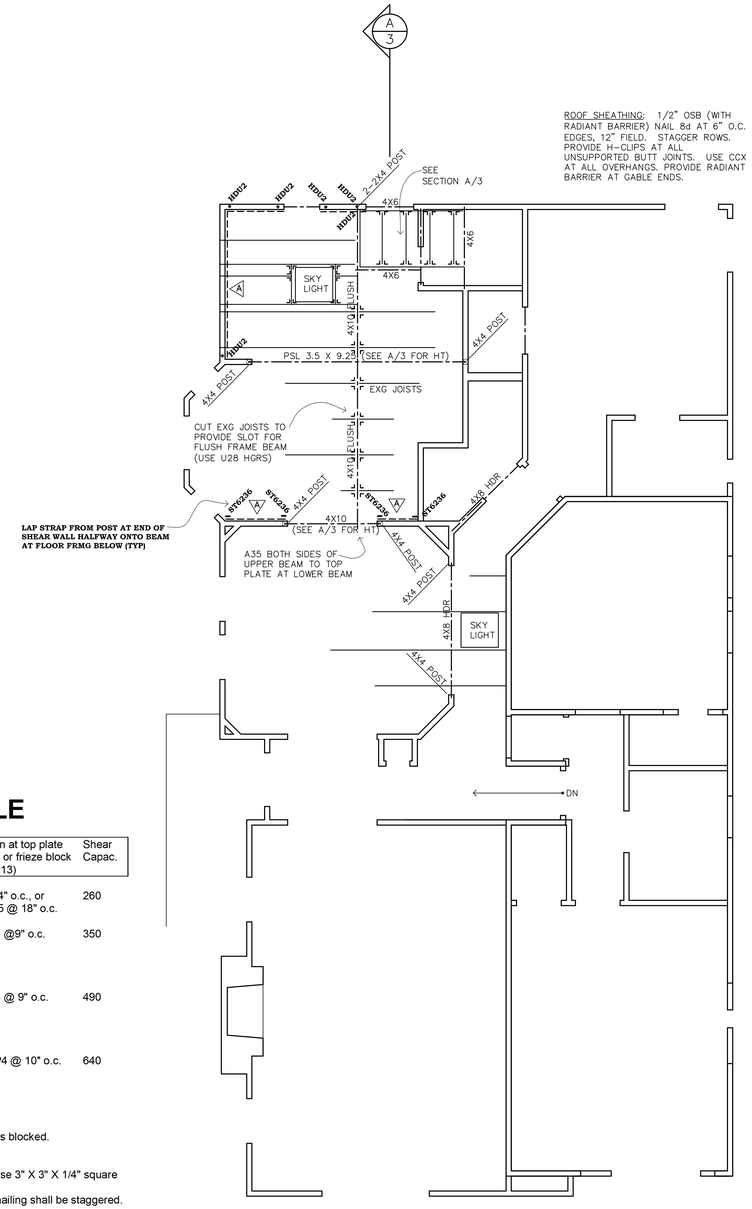

ROOF FRMG PLAN

SHEAR WALLS SHOWN OCCUR AT 1st FLOOR FRMG
HOLD-DOWNS SHOWN CONNECT 1st FLR WALLS WITH CRIPPLE WALL BELOW

1/4"

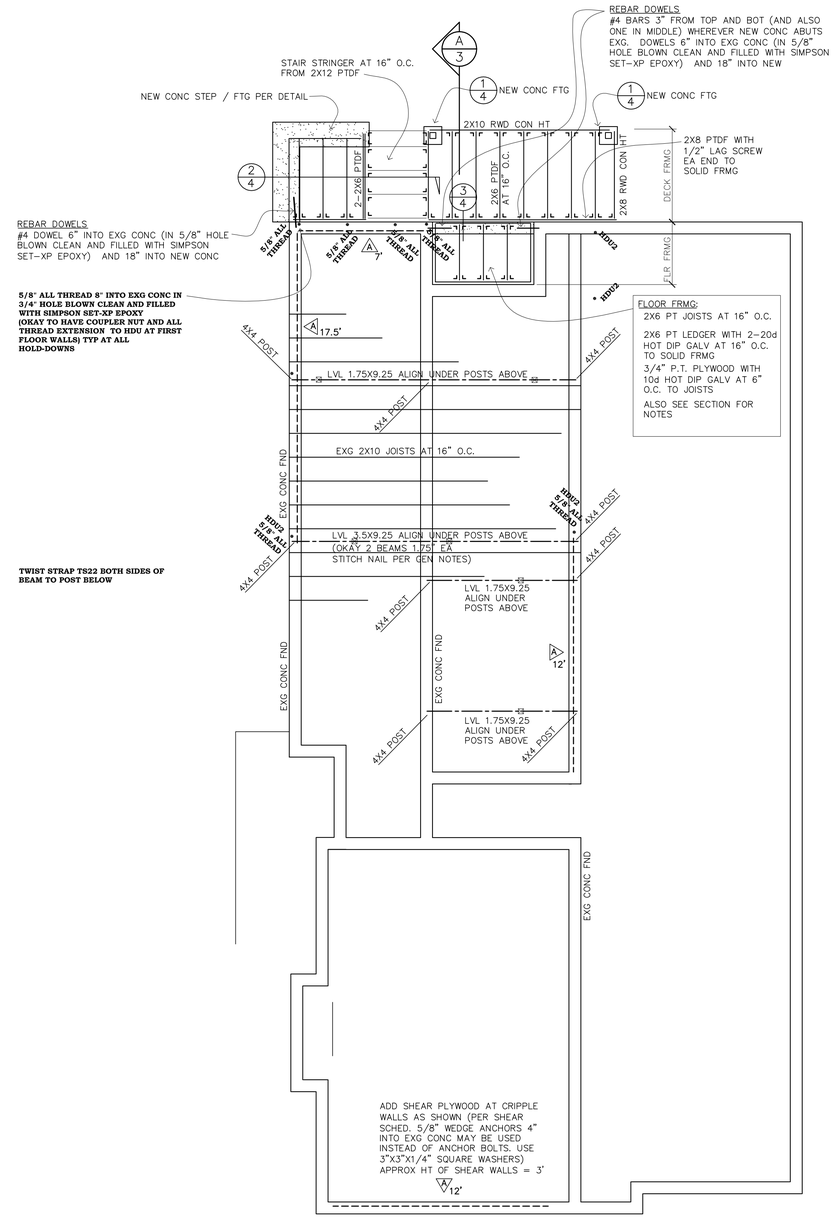

FOUNDATION PLAN

1/4"

SHEAR WALL SCHEDULE

Symbol	Sheathing Edge Nail	Base Plate Nailing	5/8" Sill Bolt Spacing	Connection at top plate to rim joist or frieze block (See note 13)	Shear Capac.
A	1/2" plwd 8d @ 6" o.c.	6" o.c.	52" max. o.c.	16d tn @ 4" o.c., or Simp. A 35 @ 18" o.c.	260
B	1/2" plwd 8d @4" o.c. 3x studs/blocking @ plwd. joints; 3x sills	4" o.c.	40" max. o.c.	Simp. A35 @9" o.c.	350
C	1/2" plwd. 8d @ 3" o.c. 3x studs/blocking @ plwd. joints	3" o.c.	14" max. o.c.	Simp. A35 @ 9" o.c.	490
D	1/2" plwd 8d @ 2" o.c. 3x studs/blocking @ plwd. joints; 3x sills	2-1/2" o.c. Staggered	24" max. o.c.	Simp. LTP4 @ 10" o.c.	640

Notes:
1. Plywood shear panels shall be C-DX min. Unless Noted Otherwise, with all edges blocked.
2. All nails shall be common or (hot-dipped or tumbled) galv. box nails, U.N.O.
3. All base plate nails are 16d common nails.
4. Sill bolts shall be 5/8" diameter x 12" min. long, embedded 7" min in concrete. Use 3" X 3" X 1/4" square washers.
5. Plywood sheathing shall be nailed directly to studs. Plywood joint and sill plate nailing shall be staggered.
6. Plywood field nailing is @12" o.c.
7. Pre-drill nail holes for 16d @ 4" o.c. or less.
8. All nails shall have a minimum penetration per 2013 CBC.
9. When no tie-down is indicated on the plans, corner studs shall be nailed to each other with 16d @ 6" o.c.
10. Where no shear walls are indicated, all framing nailing shall conform to 2013 CBC.
11.
12. Posts with hold-downs shall be placed as close to ends of shear wall as possible. Nail plywood to post with sheathing edge nailing spacing. King studs of windows and doors at edges of shear walls shall receive edge nailing.
13. All top plates (not just plates above shear walls) shall be connected to eave blocks at roof with minimum A-35 clips at 24" o.c. (4 nails each side.)
14. Provide anchor bolt within 7 diameters of hold-down bolt holes.

C:\Users\Steve\Documents\~CAD DRAWINGS\BATY\BATY ELEV REVISED.dwg 3-29-15 08:53:03 PM Steve

Steven McKee - Architect
975 West K Street
Benicia CA 94510
(707) 746-6788
(707) 746-6767 fax
www.smckee.com

Revisions:

Date: 3/30/15
Drawn By: SM

REMODEL & ADDITION

BATY RESIDENCE
1259 PORTLAND AVENUE
ALBANY CA

Sheet: 5 OF 7

FND & FRMG PLANS

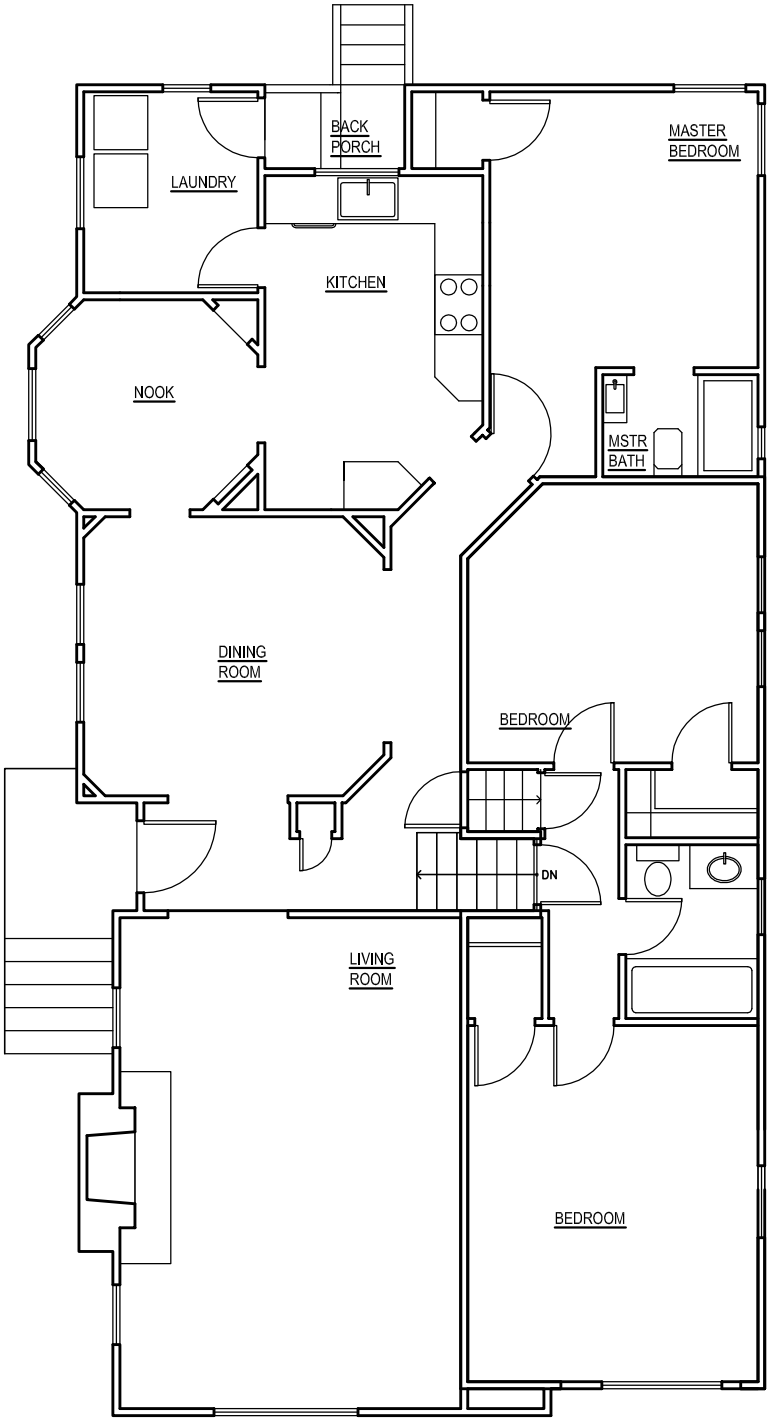

N
W E
S

EXISTING FLOOR PLAN

1/8"

1259 PORTLAND AVENUE
ALBANY CA