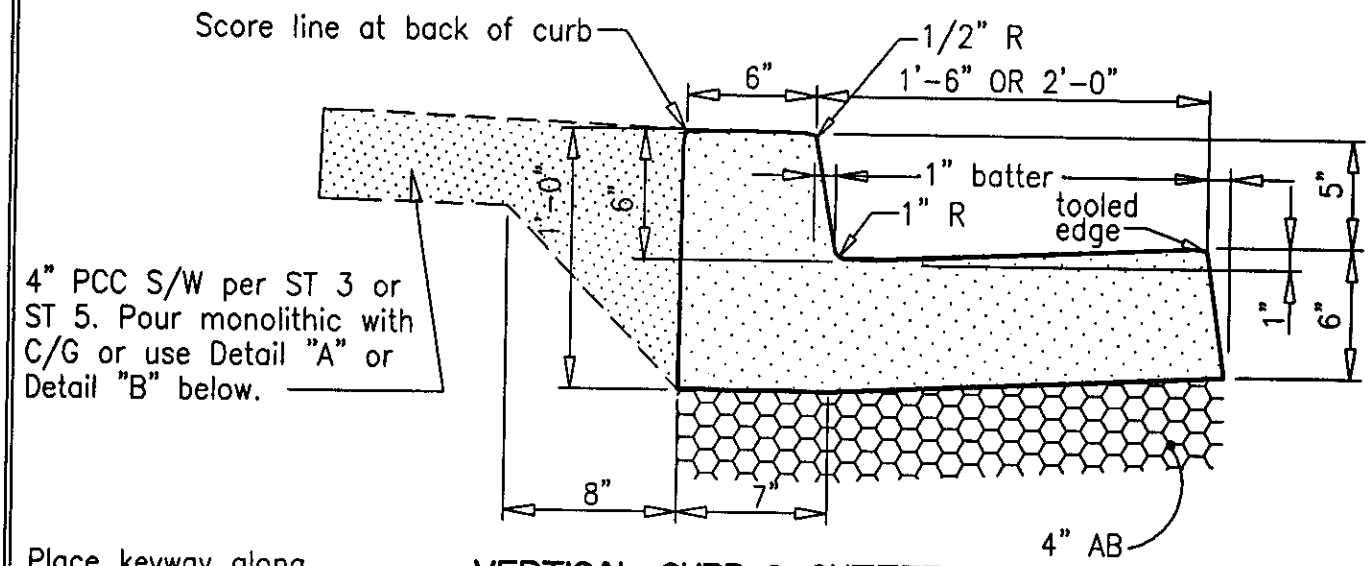

VERTICAL CURB & GUTTER

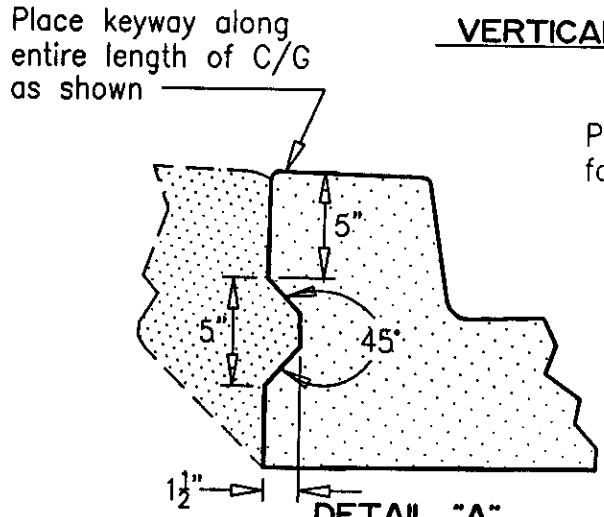

DETAIL "A" (KEYWAY)

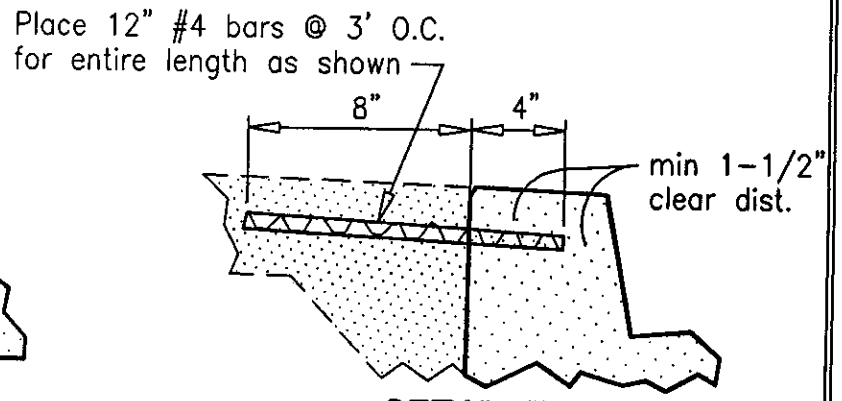

DETAIL "B" (DOWELS)

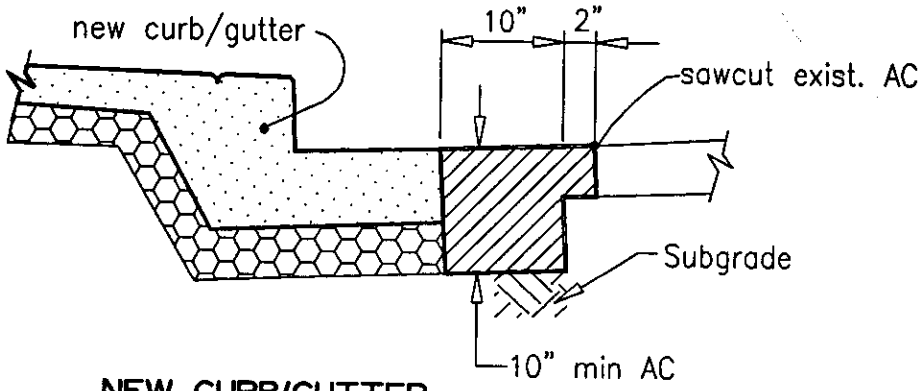

NEW CURB/GUTTER AT EXISTING STREET

SEE ST 7 FOR MATERIALS / CONSTRUCTION REQUIREMENTS
SEE ST 4 FOR JOINT CONSTRUCTION REQUIREMENTS

CITY OF ALBANY
ALAMEDA COUNTY, CALIFORNIA

VERTICAL CURB AND GUTTER

Approved: Date: 7-21-00
City Engineer RCE 29392 (Exp. 3-31-03)

ST 1

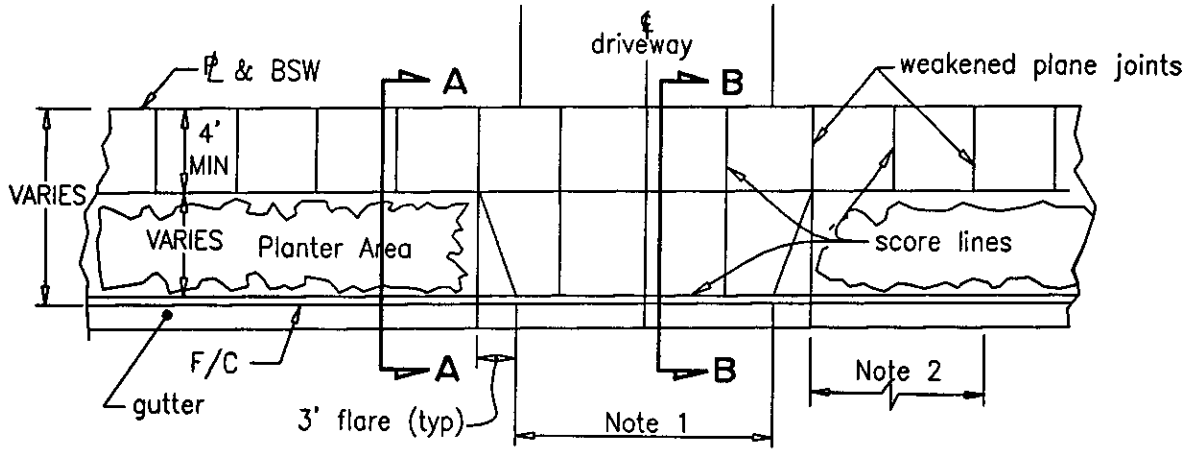

NOTES:

1. Driveway entrance to be 6" wider than driveway (symetric about centerline)
2. 3' min. dist. from edge of driveway to ℄, street light, fire hydrant, or other D/W; min 10' to radius return (typ both sides)

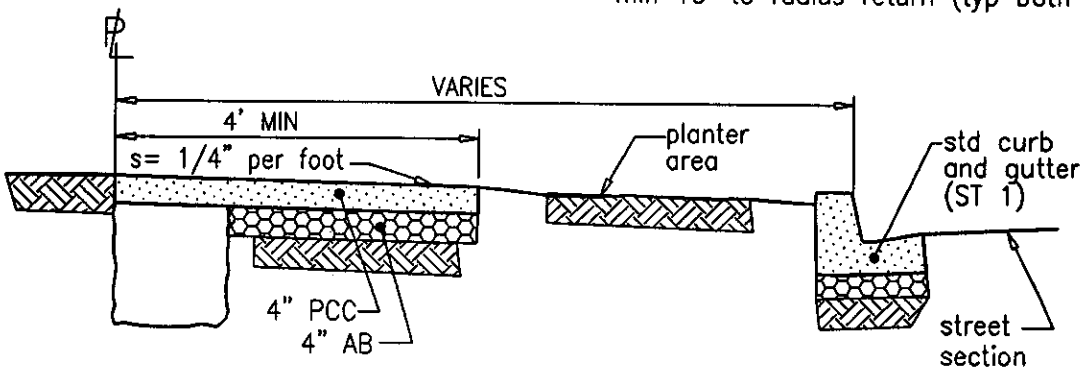

SECTION A-A

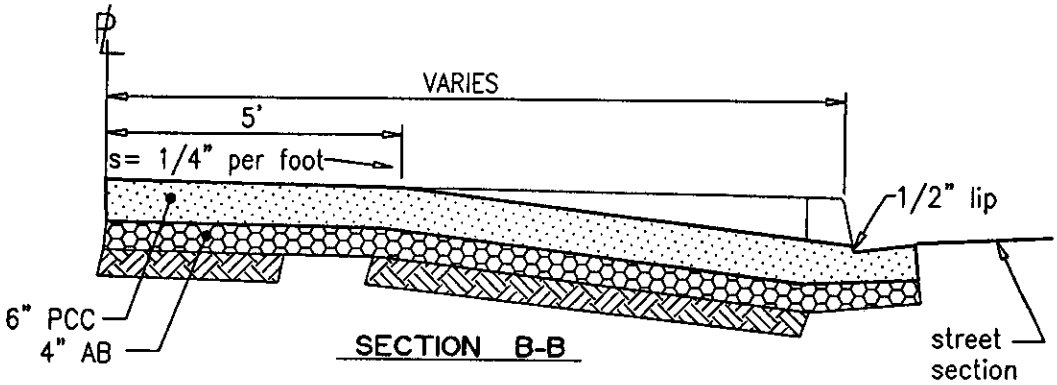

SECTION B-B

SEE ST 7 FOR MATERIALS / CONSTRUCTION REQUIREMENTS
SEE ST 4 FOR JOINT CONSTRUCTION REQUIREMENTS

CITY OF ALBANY ALAMEDA COUNTY, CALIFORNIA	
SIDEWALK / DRIVEWAY (SEPARATED)	
Approved: Date: 7-21-00 City Engineer RCE 29392 (Exp. 3-31-03)	ST 2

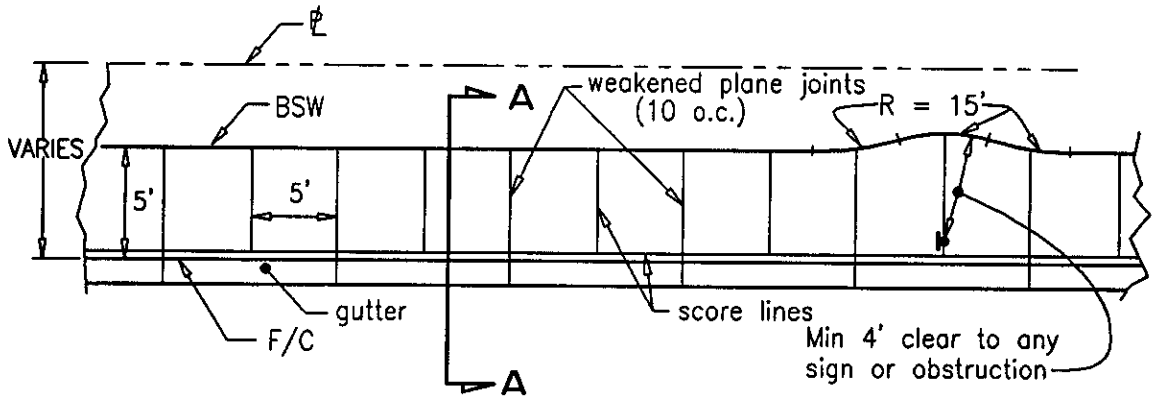

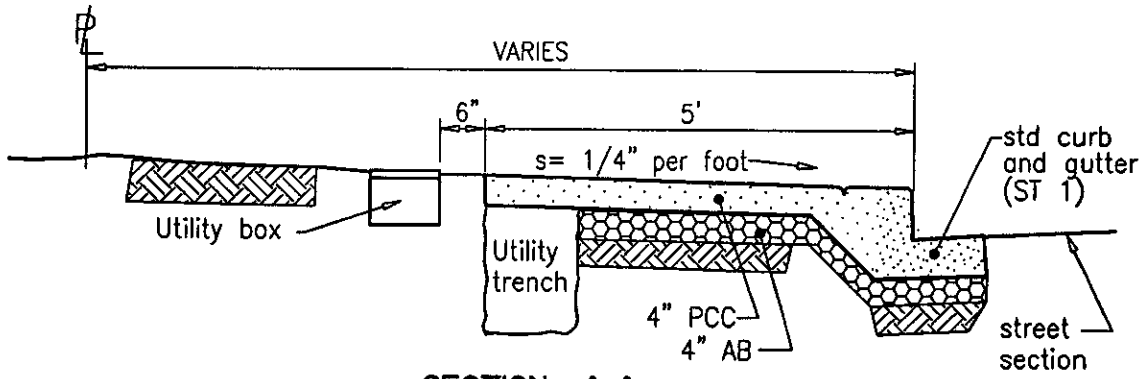

SECTION A-A

SEE ST 7 FOR MATERIALS / CONSTRUCTION REQUIREMENTS
SEE ST 4 FOR JOINT CONSTRUCTION REQUIREMENTS

CITY OF ALBANY ALAMEDA COUNTY, CALIFORNIA	
SIDEWALK (MONOLITHIC)	
Approved: Date: 7-21-00 City Engineer RCE 29392 (Exp. 3-31-03)	ST 3

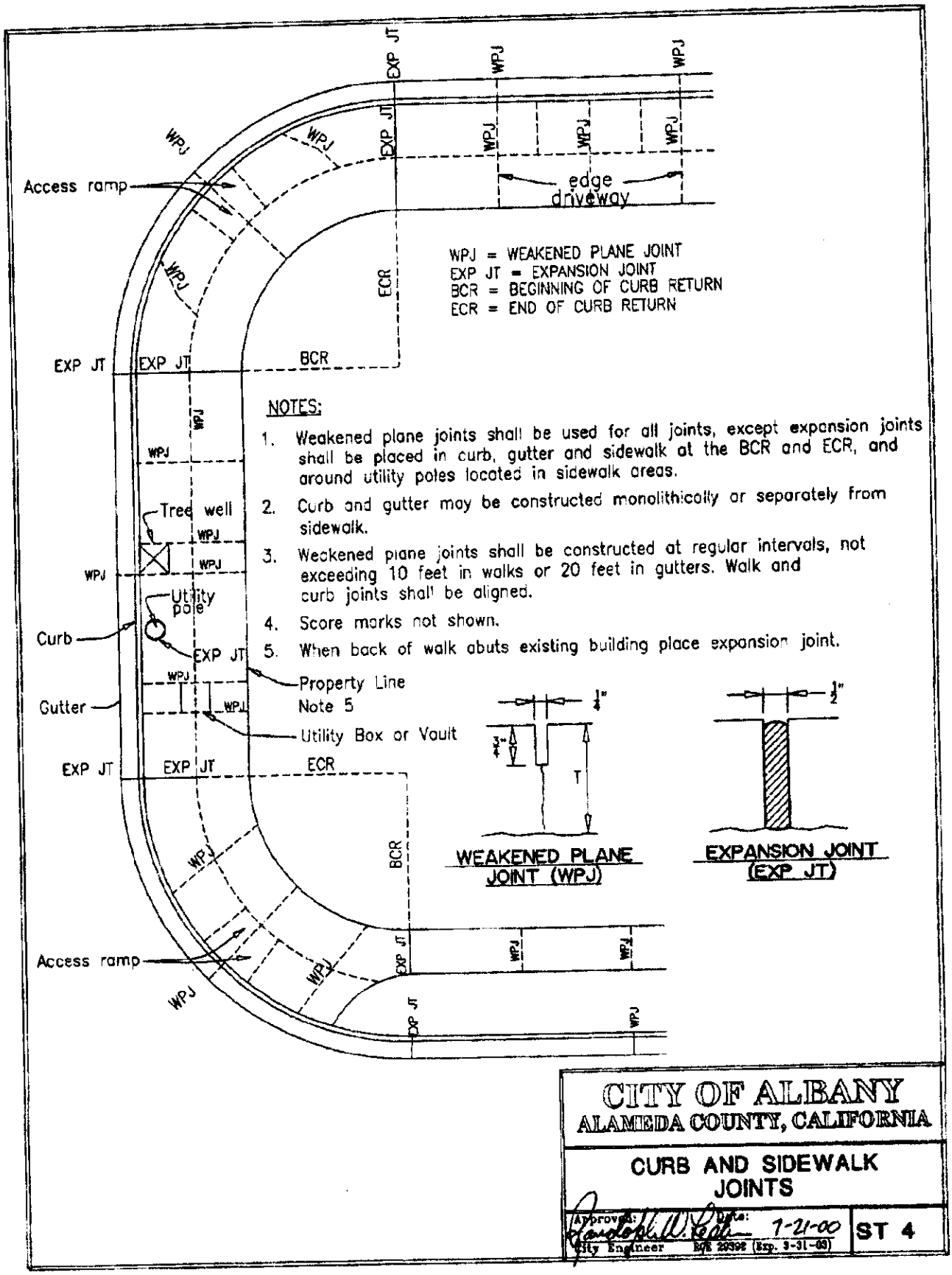

NOTES:

1. Weakened plane joints shall be used for all joints, except expansion joints shall be placed in curb, gutter and sidewalk at the BCR and ECR, and around utility poles located in sidewalk areas.
2. Curb and gutter may be constructed monolithically or separately from sidewalk.
3. Weakened plane joints shall be constructed at regular intervals, not exceeding 10 feet in walks or 20 feet in gutters. Walk and curb joints shall be aligned.
4. Score marks not shown.
5. When back of walk abuts existing building place expansion joint.

CITY OF ALBANY
ALAMEDA COUNTY, CALIFORNIA

CURB AND SIDEWALK JOINTS

Approved: Date: 7-21-00
City Engineer RCE 20398 (Exp. 3-31-03)

ST 4

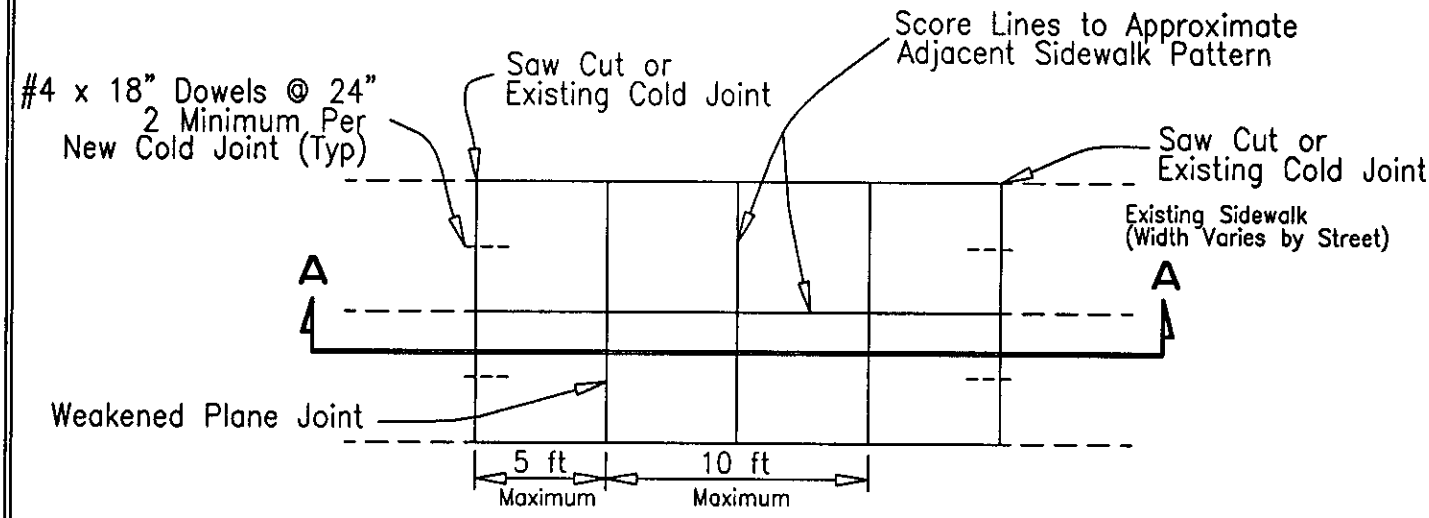

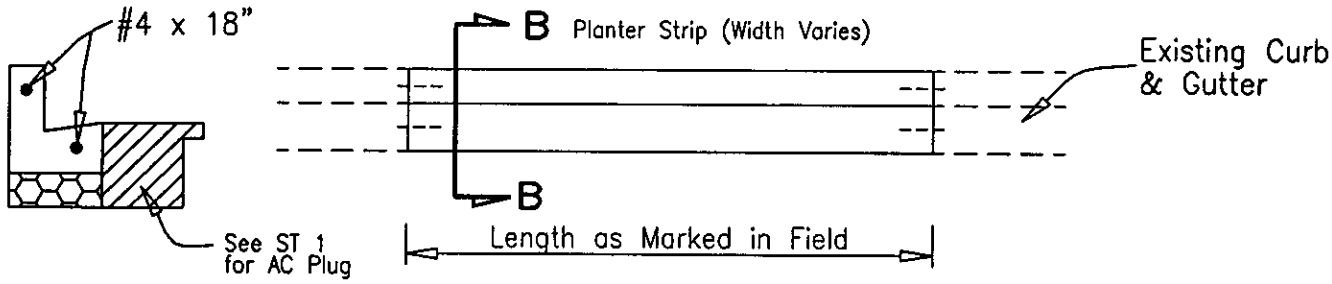

SECTION B-B

PLAN

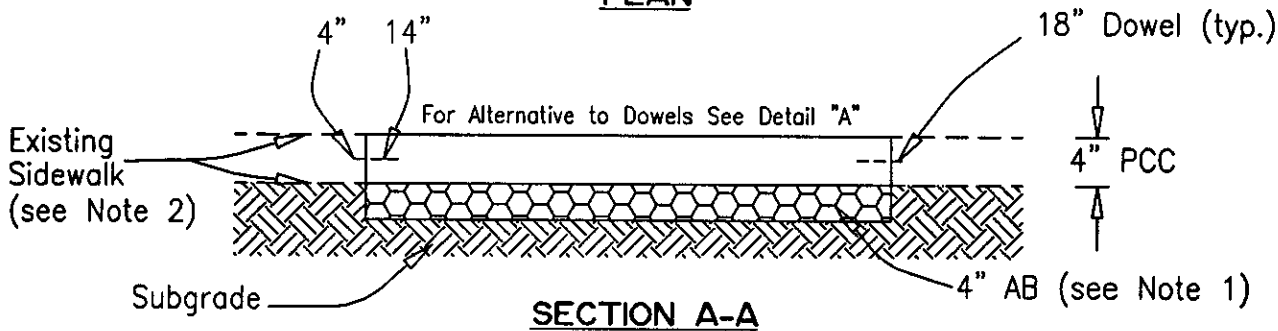

SECTION A-A

Notes:

1. When tree roots are within 8" of finished grade, delete 4" AB and place 6" x 6" x 10 ga wire mesh in concrete.
2. When existing sidewalk is less than 4" thick, Detail A may be substituted for dowels.

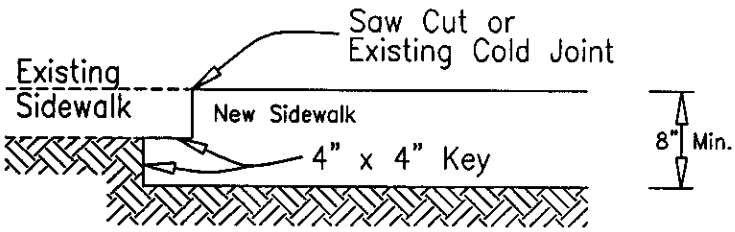

DETAIL "A"

Alternative Key Detail

SEE ST 7 FOR MATERIALS / CONSTRUCTION REQUIREMENTS
SEE ST 4 FOR JOINT CONSTRUCTION REQUIREMENTS

CITY OF ALBANY
ALAMEDA COUNTY, CALIFORNIA

CURB, GUTTER & SIDEWALK REPAIRS

Approved: Date: 7-21-00
City Engineer RCE 29392 (Exp. 3-31-03)

ST 5

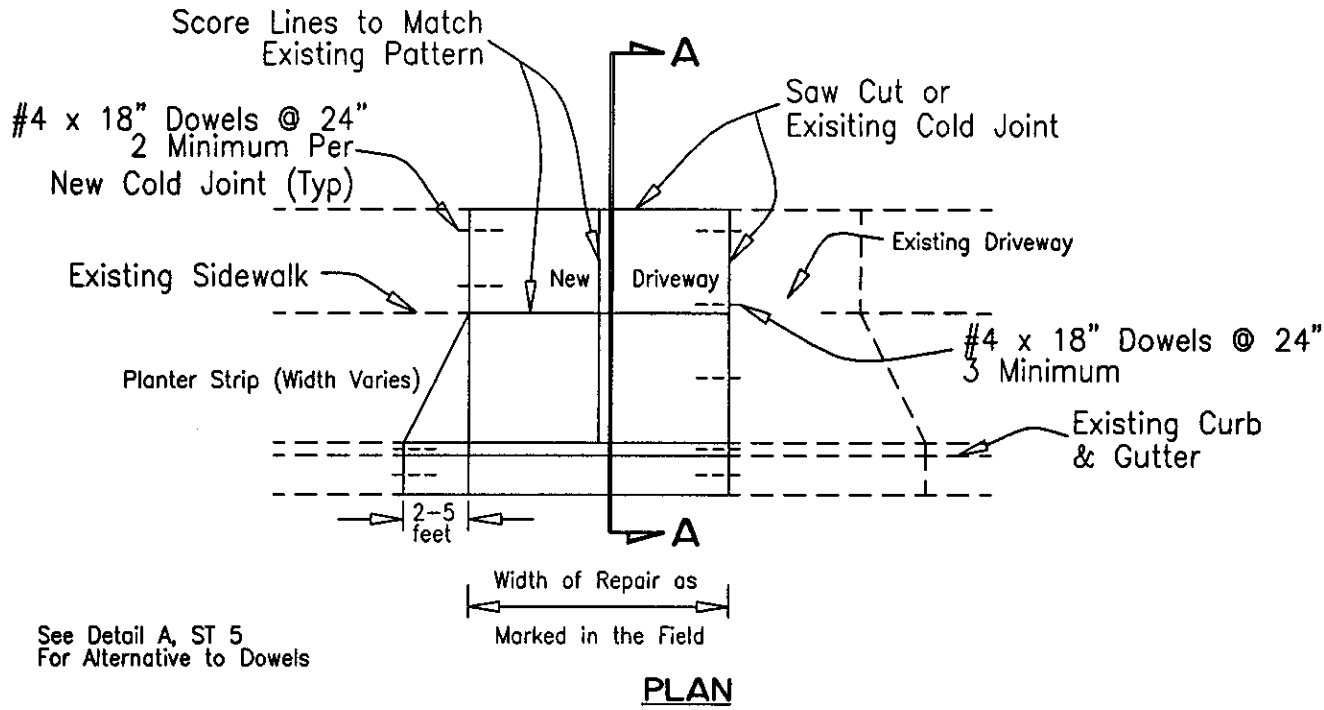

PLAN

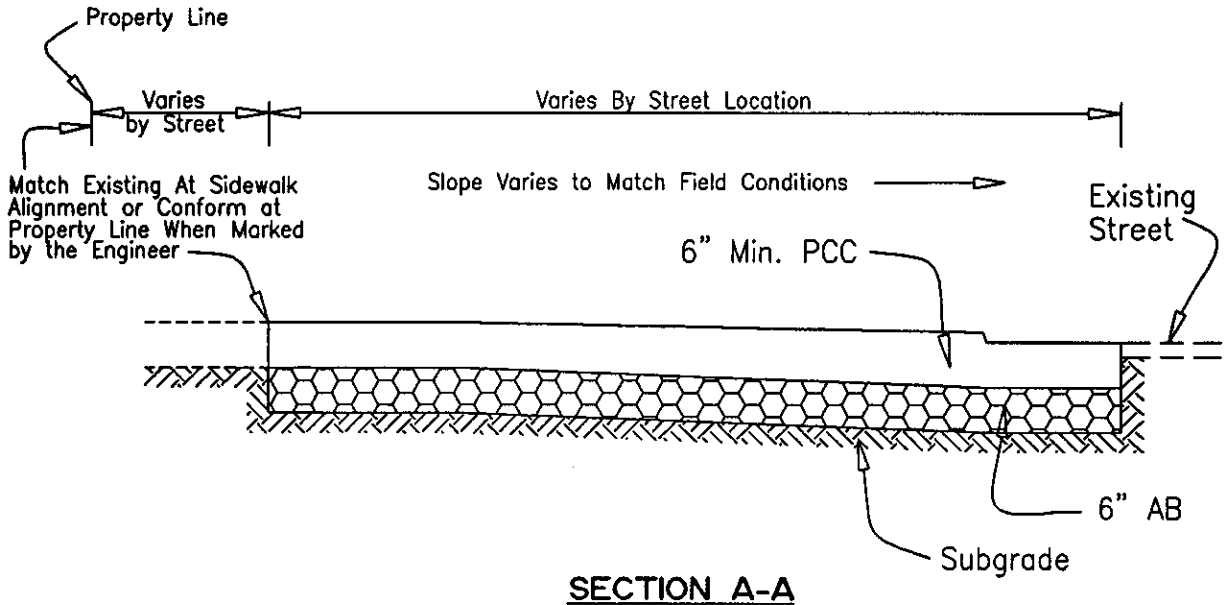

SECTION A-A

SEE ST 7 FOR MATERIALS / CONSTRUCTION REQUIREMENTS
SEE ST 4 FOR JOINT CONSTRUCTION REQUIREMENTS

CITY OF ALBANY
ALAMEDA COUNTY, CALIFORNIA

DRIVEWAY REPAIRS

Approved: Date: 7-21-00
City Engineer RCE 29392 (Exp. 3-31-03)

ST 6

LEGEND

=concrete

=aggregate base

=subgrade/exist. grade

1. Subgrade shall be native material, 6" deep, compacted to 90% Relative Compaction (R.C.)
2. Cushion material shall be Class 2 aggregate base, per Caltrans Standard Specifications, Section 26; compacted to 95% R.C.
3. Concrete shall be 520-C-2500, 4" Maximum Slump.
4. Curb, gutter and sidewalk to be placed monolithically where possible. Where non-monolithic, place dowels and/or keyway per ST 1.
5. Place 1/2" expansion joint at 200' spacings and at returns.
6. Place 3/4" deep weakened plane joint at 20' maximum spacings through curb and gutter, and 10' maximum spacings through sidewalk, driveway and at edges of driveways and at 1/2 width for sidewalks and driveways over 10 feet in width.
7. Place score lines at 5' spacing between weakened plane joints and along back of curb.
8. Place no. 4 reinforcing steel bars at 18 inches each way in industrial, commercial and street level driveways.
9. Concrete to have a soft broom finish. Clear curing compound to be applied per manufacturer's specifications.
10. When replacing curb, gutter, sidewalk, and driveway, match existing width and scoring. Sawcuts shall be at joints or score lines. Insert no. 4 by 18" long steel dowels at 24" on center (2 minimum for curb and gutter). Add 1 lb. lampblack per cubic yard.
11. Stamp 3" high letters - "W"(water) and "S"(sewer) in face of curb to locate laterals.
12. Sawcut existing A.C. pavement with power saw.
13. Asphalt Concrete shall be 1/2" Max Aggregate Type A per Caltrans Sec. 39, 3" Maximum Lifts.

CITY OF ALBANY
ALAMEDA COUNTY, CALIFORNIA

NOTES - SIDEWALKS, DRIVEWAYS, AND CURB & GUTTER

Approved: Date: 7-21-00
City Engineer RCE 29392 (Exp. 3-31-03)

ST 7

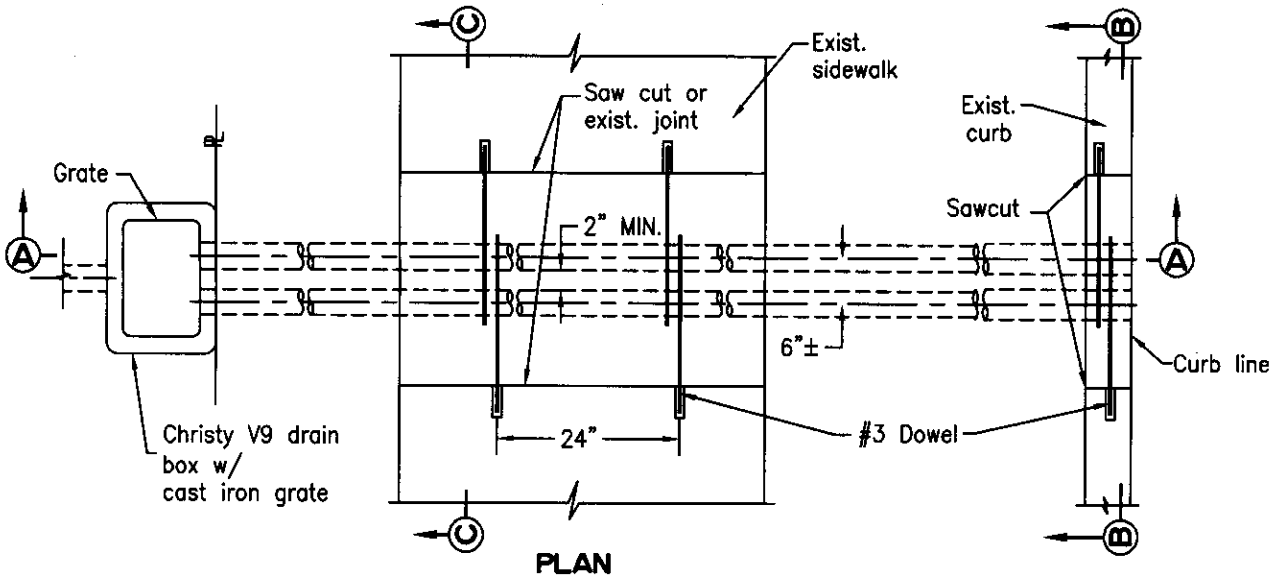

PLAN
SCALE: 1/2"=1'-0"

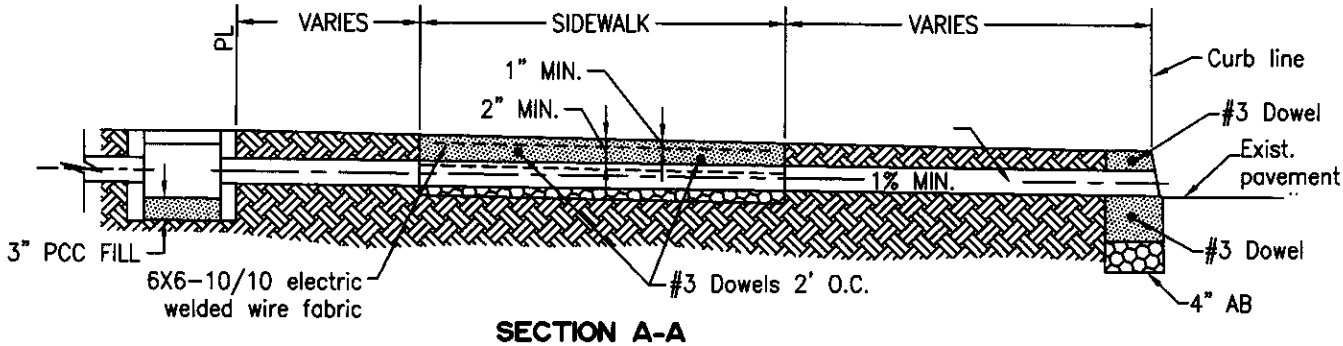

SECTION A-A
SCALE: 1/2"=1'-0"

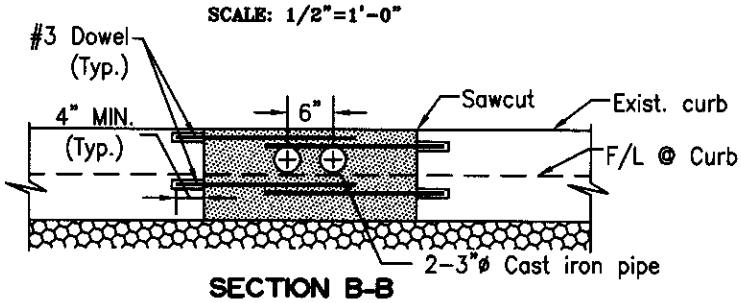

SECTION B-B
SCALE: 1/2"=1'-0"

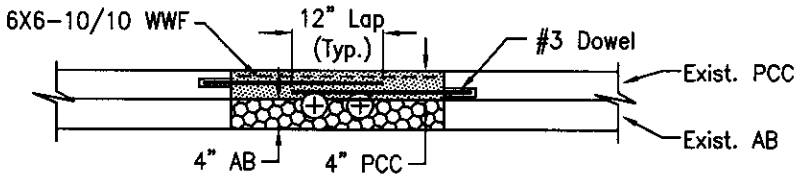

SECTION C-C
SCALE: 1/2"=1'-0"

Notes:
1. See ST 5 for dowel construction. Dowels shall be grouted into drilled holes in existing sidewalk and curb.
2. See ST 7 for material and construction requirements.
3. See ST 1 for Vertical curb dimensions.

No	Revision	Date	By
1	Dowels & show F/L	11/6/06	RWL

CITY OF ALBANY
ALAMEDA COUNTY, CALIFORNIA

SIDEWALK DRAIN RESIDENTIAL LOTS

Approved: Date: 7/20/05
City Engineer RCE 29392 (Exp. 3-31-07)

ST 10